REQUEST FOR APPLICATIONS

CIVIL/ELECTRICAL CONTRACTOR SERVICES

RFA No. PS20191847

Issue Date: March 4, 2020

Issued by: City of Vancouver (the "City")

TABLE OF CONTENTS

SUMMARY

This Request for Application (the "RFA") provides an opportunity to submit applications for review by the City and, depending on the City's evaluation of such application, among other factors, to potentially negotiate with the City to enter into a standing contract under which Civil/Electrical Contractor Services may be provided to the City during a period of approximately three years.

PART A – INFORMATION AND INSTRUCTIONS

THE RFA

1.1 Except where expressly stated otherwise in Appendix 1 to Part C of the RFA: (i) no part of the RFA consists of an offer by the City to enter into any contractual relationship; and (ii) no part of the RFA is legally binding on the City.

1.2 As noted above, this Request for Applications ("**RFA**") concerns the City's interest in, from time to time, procuring civil-electrical contractor services for Electrical Infrastructure Development. As specific requirements are not known at this time, the City wishes to enter into standing contracts, in the form of Part D (each an "**Agreement**"), with a number of suppliers that have the interest and capabilities to provide such services. This would allow the City to call for required services, as and when the need arises. Further information regarding the services that are expected to be required is set out in Part B of the RFA.

1.3 The City is interested in selecting multiple applicants in this RFA (each an "**Applicant**") with the capability and experience to efficiently and cost-effectively meet the City's requirements. The City currently expects to select such Applicants and then enter into negotiations with such Applicants concluding in the execution of Agreements with them. However, the City may: (i) decline to select any Applicant; (ii) decline to enter into any Agreement; (iii) select only one Applicant; or (iv) enter into one or more agreements respecting the subject matter of the RFA with one or more Applicants or other entities at any time. The City may also terminate the RFA at any time.

1.4 In assessing Applicants, the City expects to consider the factors described in Section 8 below, among others.

1.5 **NO BID SECURITY IS REQUIRED FROM APPLICANTS IN CONNECTION WITH THE SUBMISSION OF APPLICATIONS BECAUSE NO APPLICATION WILL BE DEEMED TO BE AN IRREVOCABLE OR OTHERWISE BINDING LEGAL OFFER BY AN APPLICANT TO THE CITY. THE LEGAL OBLIGATIONS OF AN APPLICANT THAT WILL ARISE UPON THE SUBMISSION OF ITS APPLICATION WILL BE LIMITED TO THE TERMS AND CONDITIONS STATED IN APPENDIX 1 TO THE APPLICATION FORM (PART C).**

1.6 The execution of any Agreement may be contingent on approval by the Vancouver City Council.

1.7 The RFA consists of four parts, plus appendices:

(a) PART A – INFORMATION AND INSTRUCTIONS: This part is intended to serve as a guide to the RFA process for Applicants.

(b) PART B – EXPECTED SERVICES: This part describes the subject matter of the RFA, in respect of which the City invites Applications.

(c) PART C – FORM OF APPLICATION: This is the form in which the Applications should be submitted.

(d) PART D - FORM OF AGREEMENT: This part contains a model Agreement (the "**Form of Agreement**"). Any Agreement resulting from the RFA is expected to be substantially in the form of the Form of Agreement.

KEY DATES

2.1 Potential Applicants should note the following key dates:

Event	Time and Date
Deadline for Enquiries	3:00 pm on March 20, 2020
Closing Time	3:00 pm on March 27, 2020

2.2 All references to time in the RFA are references to the time in the City of Vancouver, as indicated in the electronic timestamp the Application receives upon delivery to the email address specified herein, which is in turn synchronized to Network Time Protocol (NTP) provided by the National Research Council of Canada adjusted to local Pacific Time Zone.

CONTACT PERSON

3.1 All enquiries regarding the RFA must be addressed to:

Jason Lo
Jason.lo@vancouver.ca

3.2 All enquiries must be made in writing and are to be directed only to the above contact person. In-person or telephone enquiries are not permitted. Any communication from potential Applicants to City staff other than the contact person regarding the content of this RFA may lead to disqualification of the Applicant from this RFA process, at the City's sole discretion.

3.3 **IF A POTENTIAL APPLICANT BELIEVES THAT THE CITY MAY BE UNABLE TO SELECT IT DUE TO A CONFLICT OF INTEREST, BUT IS UNCERTAIN ABOUT THIS, THE POTENTIAL APPLICANT IS URGED TO CONTACT THE ABOVE-MENTIONED INDIVIDUAL AS SOON AS POSSIBLE WITH THE RELEVANT INFORMATION SO THAT THE CITY MAY ADVISE THE POTENTIAL APPLICANT REGARDING THE MATTER.**

SUBMISSION OF APPLICATIONS

4.1 Applicants should submit their Applications on or before the time and date specified in the bottom row of the table in Section 2.1 above (the "**Closing Time**").

4.2 Each Applicant should submit its Application by email in accordance with the following:

- Subject of the file to be: PS# - Title – Vendor name.
- Document format for submissions:
  - RFA Part C in PDF format – 1 combined PDF file,
  - Appendix 3 (pricing tab) in Excel format, and;
  - Any other attachments if necessary

- Zip the files to reduce the size or email separately if needed.
- Send your submissions to Bids@vancouver.ca; do not deliver a physical copy to the City of Vancouver.
- If you did not receive an automated email within few minutes, check your junk folder first, and then contact Purchasing@vancouver.ca.
- Submitting the files via Drop box, FTP, or similar programs, is not acceptable.

4.3 Applications must not be submitted by hardcopy or by fax.

4.4 To be considered by the City, an Application must be submitted in the form set out in Part C (the "**Form of Application**"), completed and duly executed by the relevant Applicant.

4.5 Amendments to an Application may be submitted via the same methods, at any time prior to the Closing Time.

4.6 Applications are revocable and may be withdrawn at any time before or after the Closing Time.

4.7 All costs associated with the preparation and submission of an Application, including any costs incurred by an Applicant after the Closing Time, will be borne solely by the Applicant.

4.8 Unnecessarily elaborate Applications are discouraged. Applications should be limited to the items specified in Part C of the RFA.

4.9 The City is willing to consider any Application from two or more Applicants that wish to form a consortium solely for the purpose of submitting a joint Application in response to the RFA, provided that they disclose the names of all members of the consortium and all members complete and sign the first page of the Form of Application. Nonetheless, the City has a strong preference for Applications submitted by a single Applicant, including an Applicant that would act as a general contractor and use subcontractors as required.

4.10 Applications that are submitted after the Closing Time or that otherwise do not comply in full with the terms hereof may or may not be considered by the City and may or may not be returned to the Applicant, in the City's sole discretion.

CHANGES TO THE RFA AND FURTHER INFORMATION

5.1 The City may amend the RFA or make additions to it at any time.

5.2 It is the sole responsibility of Applicants to check the City's website at: http://vancouver.ca/doing-business/open-bids.aspx regularly for amendments, addenda, and questions and answers in relation to the RFA.

5.3 Applicants must not rely on any information purported to be given on behalf of the City that contradicts the RFA, as amended or supplemented in accordance with the foregoing Section 5.2.

PROPOSED TERM OF ENGAGEMENT

6.1 The term of any Agreement is expected to be a 3-year period, for a maximum total term of 3 years.

PRICING

7.1 All prices quoted in any Application are to be exclusive of applicable sales taxes calculated upon such prices, but inclusive of all other costs.

7.2 Prices must be quoted in Canadian currency.

7.3 Prices are to be quoted DDP, destination (Incoterms, 2010). For the avoidance of doubt, freight, insurance, unloading at the destination designated by the City, import duties, brokerage, royalties, handling, overhead, profit and all other similar costs are to be included in quoted prices.

EVALUATION OF APPLICATIONS

8.1 The City may open or decline to open Applications in such manner and at such times and places as are determined by the City.

8.2 The City currently intends that all Applications submitted to it in accordance with the RFA will be evaluated by City representatives, using quantitative and qualitative tools and assessments, as appropriate, to determine which Application or Applications offer the overall best value to the City. In so doing, the City expects to examine not only financial terms, but also offered services, innovativeness, environmental or social impacts or benefits and other criteria including, but not limited to Applicants':

(a) ability to meet the Requirements (as defined in Part B), or ability to otherwise satisfy the City's objectives and requirements;

(b) business reputation and capacity, proven skills, knowledge and experience in delivering similar services and to similar clients;

(c) proposed services and capabilities, including but not limited to dedicated resource on account management and contract management, management of schedule services and transition process, if applicable;

(d) response time and on-time service delivery;

(e) financial offering, including, but not limited to, prices, value-added services, and discounts;

(f) quality and satisfaction of City's requirement and/or current industry standards, including warranty coverage;

(g) ability to support the City's sustainability initiatives;

(h) ability to meet the City's insurance requirements; and

(i) any other criteria set out in the RFA or otherwise reasonably considered relevant.

(j) certain other factors may be mentioned in Part B or elsewhere in the RFA.

Evaluation Criteria	Evaluation Weighting
Technical	60%
Financial	35%
Sustainability (Environmental and/or Social)	5%
Total	100%

8.3 The City will retain complete control over the RFA process at all times. The City is not legally obligated to review, consider or evaluate Applications, or any particular Application, and need not necessarily review, consider or evaluate Applications, or any particular Application in accordance with the procedures set out in the RFA. The City may continue, interrupt, cease or modify its review, evaluation and negotiation process in respect of any or all Applications at any time without further explanation or notification to any Applicant.

8.4 Applicants may at any time be asked to provide additional information or details for clarification, including by attending interviews, making presentations, supplying samples, performing demonstrations, furnishing technical data or proposing amendments to the Form of Agreement. The City will be at liberty to enter into discussions or negotiations with any one or more of the Applicants without having any duty or obligation to advise the other Applicants or to allow the other Applicants the same opportunity.

8.5 Prior to approval of an Application, the City must be satisfied as to the Applicant's financial stability. Applicants may be asked to provide financial statements prepared by an accountant and covering at least the prior two years. The City may also request that any proposed subcontractors undergo evaluation by the City.

8.6 The City may also require that any proposed subcontractors undergo evaluation by the City.

8.7 The City will retain complete discretion over the number of Applications to accept or the number of Agreements to enter into, if any. Once Agreements (if any) have been entered into, the City will also retain complete discretion over the allocation of work, if any, to or among successful Applicants and, in connection therewith, may use a ranked list, consistent with the rankings of Applicants in the evaluation process.

8.8 The City expects to evaluate and rank Applicants not only for the purpose of entering into standing Agreements and allocating work on the basis of such Agreements from time to time over a period of approximately three to five years as describe above, but also, as noted at Section 1.5 above, to produce a Pre-Qualification List of top-ranking Applicants, which could be invited to make submissions in procurement competitions limited to the listed Applicants. The City expects that it would maintain the Pre-Qualification List, without refreshing it or adding new entities to it for a period of approximately three years.

For the avoidance of doubt, notwithstanding any other provision in the RFA, the City has in its sole discretion, the unfettered right to: (a) accept any Application; (b) reject any Application; (c) reject all Applications; (d) give precedence to an Application which is not the lowest-price Application; (e) accept an Application that deviates from the description of services in Part B or the conditions specified in the RFA; (f) reject an Application even if it is the only Application received by the City; (g) accept all or any part of an Application; and (h) enter into one or more agreements respecting the subject matter of the RFA with any entity or entities at any time. Without limiting the foregoing, the City may reject any Application by an Applicant that has a conflict of interest, has engaged in collusion with another Applicant or has otherwise attempted to influence the outcome of the RFA other than through the submission of its Application.

CITY POLICIES

9.1 The City's Procurement Policy, Ethical Purchasing Policy and related Supplier Code of Conduct found at http://vancouver.ca/doing-business/selling-to-and-buying-from-the-city.aspx align the City's approach to procurement with its corporate social, environmental and economic sustainability values and goals. They evidence the City's commitment to maximize benefits to the environment and the community through product and service selection, and to ensure safe and healthy workplaces, where human and civil rights are respected. Each Applicant is expected to adhere to the supplier performance standards set forth in the Supplier Code of Conduct. The Ethical Purchasing Policy shall be referred to in the evaluation of Applications, to the extent applicable.

LIVING WAGE EMPLOYER

10.1 Effective May 1, 2017, the City of Vancouver became a "Living Wage Employer". As such, the City requires all firms that are contracted by the City to provide services on City-owned and leased properties to pay employees who perform those services on City property a Living Wage as calculated by the Living Wage for Families Campaign.

Please see the Living Wage for Families Campaign website for the current Living Wage for Vancouver:

http://www.livingwageforfamilies.ca/living_wages_in_bc_and_canada

The Living Wage includes the value of any non-mandatory benefits such as paid sick leave, employer-paid Medical Services Plan premiums and extended health benefits.

The Living Wage for Families has created a Living Wage Calculator to assist with the calculation of an employee's hourly rate with benefits. The Living Wage Calculator can be found at the following website:

http://www.livingwageforfamilies.ca/employers/living-wage-calculator/

Applicants should refer to the Form of Agreement attached as Part D to this RFA for the specific requirements related to the Living Wage, which include:

(a) paying the Living Wage to all employees who perform services pursuant to the Agreement on City property during the term of the Agreement; and

(b) ensuring that all subcontractors pay the Living Wage to their employees who perform services on City property during the term of the Agreement.

Failure to comply with the Living Wage requirement will entitle the City to terminate the Agreement.

CERTAIN APPLICABLE LEGISLATION

11.1 Applicants should note that the City of Vancouver is subject to the *Freedom of Information and Protection of Privacy Act* (British Columbia), which imposes significant obligations on the City's consultants or contractors to protect all personal information acquired from the City in the course of providing any service to the City.

11.2 Applicants should note that the *Income Tax Act* (Canada) requires that certain payments to non-residents be subject to tax withholding. Applicants are responsible for informing themselves regarding the requirements of the *Income Tax Act* (Canada), including the requirements to qualify for any available exemptions from withholding.

LEGAL TERMS AND CONDITIONS

12.1 **The legal obligations of an Applicant that will arise upon the submission of its Application are stated in this Appendix 1 to the Form of Application. Except where expressly stated in these Legal Terms and Conditions: (i) no part of the RFA consists of an offer by the City to enter into any contractual relationship; and (ii) no part of the RFA is legally binding on the City.**

POTENTIAL APPLICANTS MUST REVIEW THESE LEGAL TERMS AND CONDITIONS CAREFULLY BEFORE SUBMITTING N APPLICATION.

APPENDIX 1 TO PART A

INTENTIONALLY DELETED.

PART B – EXPECTED SERVICES

1.0 Introduction

The purpose of this RFA is to prequalify a list of companies with the capability and experience to efficiently and cost-effectively provide civil/electrical Engineering Services to perform work throughout the City, to support its capital requirements and climate change emergency response as per the requirements and specifications set out herein. This work includes, but is not limited to the underground installation of electrical ducts, junction boxes, and street lighting bases in alleys, boulevards, roads, and sidewalks in accordance with the COV Standard for Underground Duct Configurations. This initiative will identify best and leading practices to increase procurement efficiency for the City's requirements. This initiative will also maintain and improve quality, sustainability and provide opportunities to improve and consolidate the City's business relationships with qualified supplier(s) capable of supplying all or a large part of the requirements. Thus it is paramount the successful Applicant(s) be able to meet the requirements of the City with the highest level of service.

2.0 Background

The Traffic, Electrical Operations & Design Branch has identified a need to replace aging, deteriorating, and non-compliant underground infrastructure.

3.0 Objective

It is important to identify a reliable and trusted Applicant with a long term business that can:

(i) Satisfy the scope

(ii) Ensure quality work

(iii) Maintain a schedule of completion times

(iv) Be competitively priced

(v) Report and invoice in a timely clear manner

(vi) Perform safe work

4.0 Technical Qualifications

All Applicant's personnel involved in delivering the Services to the City must have and maintain in good standing throughout the term on the following:

(i) Certified Fall Protection Training

(ii) Shoring and Excavation Training

(iii) Asbestos Awareness Training

(iv) Traffic Control Training

(v) Electrical FSR

(vi) Class UR FSR

5.0 Safety Requirements

(a) WorkSafeBC Clearance Letter

(b) WorkSafeBC Employer Report Card

(c) Comply to City's Electrical Safety Plan (or show evidence of a safety program)

(d) Company's Safety Program with examples of fall protection plan and risk assessments

(e) Applicant shall agree to comply with City of Vancouver Contractor Coordination program. See attached Appendix 12 for details.

6.0 Use of Subcontractors

When the Applicant requires the use of another subcontractor/trade, those subcontractors will be expected to follow the same prequalification standards set forth by the City of Vancouver.

(a) Applicant shall provide an electronic or hardcopy of the Applicant's safety program for the City of Vancouver.

(b) Applicant shall provide a WorkSafeBC Employer Report Card

(c) Applicant shall agree to comply with City of Vancouver Contractor Coordination Program. See attached Appendix 12 for details.

(d) Applicant shall provide a list of all the subcontractors that the Applicant proposes to use in carrying out its work under this agreement. See attached Appendix 8 for details.

7.0 Risk Assessment

Prior to the commencement of the Services, the Applicant, or the Applicant's Subcontractor as the case may be, is to conduct:

(a) a site assessment to ensure known hazards are identified, it is free of any other hazards and it is safe to conduct the Services or take the necessary measures to ensure the safety of its employees and the public;

(b) a review of the owners list of known hazards so that work around hazards such as asbestos abatement can be conducted appropriately;

(c) a job risk assessment to determine and ensure the appropriate training, personal protective equipment and procedures necessary to undertake the Services is available and in place;

(d) ensure work areas are properly barricaded and proper signage is in place before starting the work;

(e) be responsible for providing, at its own expense, signs, cones, warning lights, plastic sheets, guardrails, fencing, hoarding and any other material necessary to create an effective barricade to isolate the work environment from pedestrians and roadway users (the public) and to prevent unauthorized access;

(f) maintain a health, safety and environmental (HS&E) program, ensuring its personnel are fully trained (fall protection will require proof of participation by a professionally

authorized provider for all workers when working over 10 feet); **comply with all WorkSafe BC and Occupantional Health and Safety (OHS) regulations, including but not limited to, safe shoring procedures when trench depths exceed 4 feet;**

(g) immediately report to the City any safety hazards, including near-miss reporting, encountered during the performance of the Services; and

(h) ensure that a safety and communications program, including first aid coverage, is in place for its personnel whenever the Services may be required to be performed on remote locations.

8.0 Account and Contract Management

8.1 The successful Applicant shall have a designated account representative to serve as point of contact and be responsible for managing the relationship between the City and any successful Applicant. The account representative shall work with designated City staff to ensure that the City objectives are met as outlined within this section. Applicants are to provide an overview of their account management process and hierarchy;

(a) The successful Applicant shall assign representative(s) as key contact for specific roles, including but not limited to:

(i) facilitate contract implementation; ensure a smooth transition and on-going efficient operations;

(ii) provide as-if-when-needed service, technical support, and issue resolution and contract management;

(iii) accessible service escalation and issue resolution; and

(iv) the City reserves the right to review and accept the successful Applicant's assignment of the representative for the contract management.

(b) The successful Applicant shall employ competent supervision of all work, an assigned account representative must:

(i) be fully knowledgeable of all services available;

(ii) be resourceful to capability and arrangement of the successful Applicant to provide service and ensure requirements are met;

(iii) be fully accessible at all times; and

(iv) have authority to receive on behalf of the successful Applicant any communication relating to the Contract.

8.2 Reporting

(a) The Applicant is to provide to the City semi-annual (January 15th and July 15th) reporting on a number of performance measures ("**Key Performance Indicators**") and any other criteria determined by the City for the delivery of the Services. The information should be reported in the manner required by the City.

(b) The Applicant is to meet with the City as mutually agreed to by both Parties to review the quality of work and service performance, evaluate any opportunities for improvement, and address any issues relating to the delivery of the Services.

(c) The Applicant must notify the City's Organizational Safety department of all first aid, medical aid, lost time, near-miss or violent incidents and provide an incident investigation as per WorkSafeBC OHS Regulations.

(d) Contractor shall provide evidence of proper execution of all work (eg. backfill aggregate, compaction testing, minimum burial depths, etc).

9.0 General Requirements

9.1 Clean-up

(i) The Applicant will clean-up all dust, dirt, and debris left on the Site by the Applicant or its Sub-contractors and leave the Site in a condition acceptable to the City.

9.2 Disposal and Recycling

The Applicant will remove daily from the Site all debris, waste or packaging generated. Any hazardous waste such as asbestos mastic or tile products will require the appropriate hazardous material removal that will be pre-determined during the risk assessment process. On Applicant's completion of the Services the expectation is to recycle all materials which are capable of being recycled. The Applicant will dispose of any other materials which cannot be recycled in accordance with applicable Laws.

9.3 Warranty Documentation

The Applicant upholds a repair guarantee and warrants the labor and materials to be at least TWO (2) years. The warranty period begins on the date the part is installed. The source of this installation date will come from the Applicant's invoice.

10.0 Summary of Requirement

The installation of ducting, junction boxes, pole bases, and any other U/G Electrical Equipment will adhere to COV Standards for such work.

Refer to COV Standard Detail Drawings G4.7, E1.3-8.11, and CE1.1-1.7 and Supplemental Drawing M-912.

Any repairs to Streets or Pavements must comply with COV Standard as laid out in the City of Vancouver Engineering Design Manual, City of Vancouver Construction Specifications, City of Vancouver Utilities Design and Construction Manual, the City of Vancouver Standard detail drawings, and the Master Municipal Construction Document.

This work will be carried out in a manner that ensures worker safety. The electrical scope of this work will require the Applicant to provide details of an Electrical Safe Work Policy that meets or exceeds the City's Electrical Safety Plan ("ESP"). This plan must ensure that no worker performs energized Electrical work where practicable. Any energized Electrical testing or troubleshooting above 30V may only be performed after a risk assessment of the hazards has been executed. PPE must be in accordance with the City's ESP or CSA Z462.

11.0 Work Scope

The Applicant will be responsible for the supply and install of all materials required to performing work associated with any number of discreet Civil infrastructure for Electrical installations designs as directed from City of Vancouver design staff. For clarity, the City is looking for Applicants to perform the work of installing civil infrastructure for electrical installations. The Applicants will be expected to carry out the civil installations—electrical installations will be completed by the City. However, the Applicant will be required to have a valid Electrical FSR/UR FSR. Qualified workers will be directed to perform these tasks. The Applicant will follow design criteria and standards and shall not deviate. The Applicant shall adhere to hours of work restrictions as posted on some City streets, obtain and adhere to Noise By-law.

The work tasks may require, but not be limited to, the following:

(i) Traffic Management Plans

(ii) Utility Locates

(iii) Flagging

(iv) Coordination with other City Branches

(v) Health and Safety Program

(vi) Permits and Inspections

12.0 City Provided

(i) Staff from Design will be available for support as needed

(ii) Owner's List of Known workplace Hazards

(iii) All necessary Specifications and Standards

(iv) Contractors Pre-contract Hazard Assessment Form

(v) General City of Vancouver Guidelines for Archeological Chance Find Management

(vi) Lockout/Tag Out of energized electrical plant

13.0 Deliverables

Price per linear for specific ducting: Refer to COV Standard Detail Drawing G4.7.

(a) Low density ducting

(i) Residential Roads

(ii) Boulevards

(iii) Sidewalks

(b) High Density Ducting

(i) Major roads

(ii) Arterial roads

(iii) Downtown roads

(c) C1 and C2 Duct Configuration

(i) Downtown lanes

(ii) H-Frame project

(d) Ducting Adder for excess obstacles, tree roots or large rocks

(e) All duct configurations as per drawing M-912.

Price per linear for excavation and restoration

(f) Arterial (heavy asphalt) cut and cover trenching

(g) Residential (Light Asphalt) cut and cover

(h) Laneways cut and cover

(i) Sidewalks

(j) Pedestrian ramps

(k) Boulevard trenching

(i) Concrete

(ii) Earth/Grass

(iii) Exposed Aggregate

(iv) Brick

(v) Hydro vacuum excavation (tree root protection)

(l) Price per excavation for excess materials, including tree trunks and organics

Price per linear for trenching (hard surface removed by others) — backfill but no restoration

(m) Arterial (heavy asphalt) cut and cover trenching

(n) Residential (Light Asphalt) cut and cover

(o) Laneways cut and cover

(p) Sidewalks

(q) Pedestrian ramps

(r) Boulevard trenching

(i) Concrete

(ii) Earth/Grass

(iii) Exposed Aggregate

(iv) Brick

(v) Hydro vacuum excavation (tree root protection)

(s) Price per excavation for excess materials, including tree trunks and organics

Price per concrete base type

(t) COV V1, V2, V3, V4, V5 and V6 poured in place

(u) Precast MMCD Types A, B, C, C1, C2, C3, C4, C5, E2, F1, F2, L1, L2, S1, S2 modified with horns for 2-53mm conduits in and horns for 2-53mm conduits out

(v) CMBC Trolley bases for Type A7E, A3E, A23E, and A20E poles.

(w) Controller base poured in place with ground rod

(x) Large Cabinet/Kiosk base poured in place with ground rod

(y) Small Cabinet/Kiosk base poured in place with ground rod

(z) Service base poured in place

Price per concrete base break down by type

(z) COV bases

(aa) MMCD bases

(bb) CMBC Trolley bases

(cc) Controller bases

(dd) Large Cabinet/Kiosk bases

(ee) Small Cabinet/Kiosk bases

(ff) Service bases

Price per JB

(gg) Oldcastle Tier 22 Type 3 JB

(hh) Oldcastle Tier 22 Type 4 JB

(ii) Oldcastle Tier 22 Type 5 JB

(jj) Oldcastle Tier 22 Type 6 JB

(kk) Lane duty H20 Type 5 JB

(ll) Poly 1000 round JB aka MOT SN1853 round JB with SN1853A plastic lid

(mm) Poly 1000 round JB aka MOT SN1853 round JB with SN1853B steel lid

(nn) Poly 2000 JB aka MOT SN1847R round JB with SN1850R plastic lid

(oo) Poly 2000 JB aka MOT SN1847R JB with SN1848R steel lid

(pp) 243 Communications Vault with Composite Lid

(qq) 243 Communications Vault with Metal Lid

Price per Traffic Control Plan adder

(rr) Arterial Routes

(ss) Major Routes

(tt) Downtown Routes

(uu) Residential Routes

14.0 Acceptance Criteria

(i) The Contractor shall give written notice of completion of any part of the work, the City then shall reasonably promptly perform reviews and or tests of the work.

(ii) If a deficiency, defect or failure appears, the City shall notify the Contractor.

(iii) The Contractor shall remedy at its own cost as soon as reasonably practicable.

(iv) If the Contractor fails to remedy the deficiency within a reasonable time, the City may fix a date for repair.

15.0 Schedule

(i) Start date determined upon contract award

(ii) Maintain a pool of qualified staff and or subcontractors

(iii) Have sufficient equipment to complete work

(iv) Anticipate 2-3 kilometers of U/G ductwork and JB's, mostly in the downtown core

(v) Maximum of 100 new pole bases per year

16.0 Attachments

(i) Specifications (Part B – Expected Services)

(ii) Drawings

See COV Standard Detail Drawings Here: https://vancouver.ca/streets-transportation/street-design-construction-resources.aspx

MMM Group CoV Standard Pole Base Design Memo—Pole Base Design and Installation Procedure

COV Standard Underground Duct Configurations for Street Lighting / TS / COMM Drawing M-912.

17.0 VENDOR PERFORMANCE MANAGEMENT

(a) The successful Applicant's overall performance and the quality of its work will be evaluated by the City, on such factors as service levels including the service response times, service call requests, billing and documentation accuracy and other issues that the City may determine as key performance indicators and/or service level agreements with the successful Applicant.

(b) Frequency of Review

(i) Semi-Annually (January 15th and July 15th)

Key Performance Indicators (KPI's)

Item	Response Time	KPI%
As-and-when required basis and Emergency for Civil/Electrical Services (During Operating hours)	Within 8 hours	95%
As-and-when required basis and Emergency for Civil/Electrical Services (Outside Operating hours)	Within 24 hours	95%
Submit invoices (with supporting documents) and documentation accurately to City Staff	30 Days after service completion	95%

PART C – FORM OF APPLICATION

RFA No. PS20191847, CIVIL/ELECTRICAL CONTRACTOR SERVICES (the "RFA")

Applicant's Name:_____
"**Applicant**"

Address:_____

_____

Jurisdiction of Legal Organization:_____

Date of Legal Organization:_____

Key Contact Person:_____

Telephone:_____

E-mail: _____

The Applicant, having carefully examined and read the RFA, including all amendments and addenda thereto, if any, and all other related information published on the City's website, hereby acknowledges that it has understood all of the foregoing, and in response thereto hereby submits the enclosed Application.

The Applicant further acknowledges that it has read and agrees to the Legal Terms & Conditions attached as Appendix 1 to this Form of Application.

IN WITNESS WHEREOF the Applicant has executed this Application Form:

_____ _____
Signature of Authorized Signatory for the Applicant Date

_____
Name and Title

_____ _____
Signature of Authorized Signatory for the Applicant Date

_____
Name and Title

APPENDICES

The Form of Application includes the following attached Appendices:

APPENDIX 1	Legal Terms and Conditions of RFA
APPENDIX 2	Questionnaire
APPENDIX 3	Pricing
APPENDIX 4	Applicant's References
APPENDIX 5	Certificate of Insurance
APPENDIX 6	Declaration of Supplier Code of Conduct Compliance
APPENDIX 7	Personal Information Consent Form(s)
APPENDIX 8	Subcontractors
APPENDIX 9	Proposed Amendments to Form of Agreement
APPENDIX 10	Conflicts; Collusion; Lobbying
APPENDIX 11	Proof of WorkSafeBC Registration
APPENIDX 12	City of Vancouver Contractor Coordination Program
APPENDIX 13	City of Vancouver Standard Detailed Drawings
APPENDIX 14	CoV Standard Pole Base Design Memo – Pole Base Design and Installation Procedure
APPENDIX 15	City's Electrical Safety Plan ("ESP")
APPENDIX 16	Owner's List of Known Workplace Hazards
APPENDIX 17	Archaeology/Heritage Resource Protection
APPENDIX 18	Archaeology Policy & Procedure for Heritage Sites Management – Scenario B

APPENDIX 1
LEGAL TERMS AND CONDITIONS OF RFA

1 APPLICATION OF THESE LEGAL TERMS AND CONDITIONS

These legal terms and conditions set out the City's and the Applicant's legal rights and obligations only with respect to the RFA application process and any evaluation, selection, negotiation or other related process. In no event will the legal terms and conditions of this Appendix 1 apply to, or have the effect of supplementing, any Contract formed between the City and the Applicant or otherwise apply as between the Applicant and the City following the signing of any such Contract.

2 DEFINITIONS

In this Appendix 1, the following terms have the following meanings:

(a) "Applicant" means the legal entity which has signed the Application Form, and "applicant" means any applicant responding to the RFA, excluding or including the Applicant, as the context requires.

(b) "Application" means the package of documents consisting of the Application Form (including this Appendix 1), the Applicant's application submitted under cover of the Application Form, and all schedules, appendices and accompanying documents, and "application" means any application submitted by any applicant, excluding or including the Applicant, as the context requires.

(c) "Application Form" means that certain Part C of the RFA, completed and executed by the Applicant, to which this Appendix 1 is appended.

(d) "City" means the City of Vancouver, a municipal corporation continued pursuant to the Vancouver Charter.

(e) "Contract" means a legal agreement, if any, entered into between the City and the Applicant following and as a result of the Applicant's selection by the City in the City's RFA process.

(f) "Losses" means, in respect of any matter, all direct or indirect, as well as consequential: claims, demands, proceedings, losses, damages, liabilities, deficiencies, costs and expenses (including without limitation all legal and other professional fees and disbursements, interest, penalties and amounts paid in settlement whether from a third person or otherwise).

(g) "RFA" means the document issued by the City as Request for Applications No. PS20191847, as amended from time to time and including all addenda.

3 NO LEGAL OBLIGATION ASSUMED BY THE CITY

Despite any other term of the RFA or the Application Form, including this Appendix 1 (except only Sections 7, 8.2 and 10 of this Appendix 1, in each case to the extent applicable), the City assumes no legal duty or obligation to the Applicant or to any proposed subcontractor in respect of the RFA, its subject matter or the Application unless and until the City enters into a Contract, which the City may decline to do in the City's sole discretion.

4 NO DUTY OF CARE OR FAIRNESS TO THE APPLICANT

The City is a public body required by law to act in the public interest. In no event, however, does the City owe *to the Applicant or to any of the Applicant's proposed subcontractors* (as opposed to the

public) any contract or tort law duty of care, fairness, impartiality or procedural fairness in the RFA process, or any contract or tort law duty to preserve the integrity of the RFA process. The Applicant hereby waives and releases the City from any and all such duties and expressly assumes the risk of all Losses arising from participating in the RFA process on this basis.

5 EVALUATION OF APPLICATIONS

5.1 Compliance / Non-Compliance

Any application which contains an error, omission or misstatement, which contains qualifying conditions, which does not fully address all of the requirements or expectations of the RFA, or which otherwise fails to conform to the RFA may or may not be rejected by the City at the City's sole discretion. The City may also invite an applicant to adjust its application to remedy any such problem, without providing the other applicants an opportunity to amend their applications.

5.2 Reservation of Complete Control over Process

The City reserves the right to retain complete control over the RFA and application processes at all times. Accordingly, the City is not legally obligated to review, consider or evaluate the applications, or any particular application, and need not necessarily review, consider or evaluate the applications, or any particular application, in accordance with the procedures set out in the RFA, and the City reserves the right to continue, interrupt, cease or modify its review, evaluation and negotiation processes in respect of any or all applications at any time without further explanation or notification to any applicants.

5.3 Discussions/Negotiations

The City may, at any time prior to signing a Contract, discuss or negotiate changes to the scope of the RFA, any application or any proposed agreement with any one or more of the applicants without having any duty or obligation to advise the Applicant or to allow the Applicant to vary its Application as a result of such discussions or negotiations with other applicants or changes to the RFA or such applications or proposed agreements, and, without limiting the general scope of Section 6 of this Appendix 1, the City will have no liability to the Applicant as a result of such discussions, negotiations or changes.

5.4 Acceptance or Rejection of Applications

The City has in its sole discretion, the unfettered right to: accept any application; reject any application; reject all applications; give precedence to an application which is not the lowest-price application; accept an application that deviates from the requirements of the RFA or the conditions specified in the RFA; reject an application even if it is the only application received by the City; accept all or any part of an application; enter into agreements respecting the subject matter of the RFA with one or more applicants; or enter into one or more agreements respecting the subject matter of the RFA with any other person at any time.

6 PROTECTION OF CITY AGAINST LAWSUITS

6.1 Release by the Applicant

Except only and to the extent that the City is in breach of Section 8.2 of this Appendix 1, the Applicant now releases the City, its officials, its agents and its employees from all liability for any Losses incurred in connection with the RFA or the Application, including any Losses in connection with:

(a) any alleged (or judicially determined) breach by the City or its officials, agents or employees of the RFA (it being agreed that, to the best of the parties' knowledge, the City has no obligation or duty under the RFA which it could breach (other than wholly unanticipated obligations or duties merely alleged or actually imposed judicially))

(b) any unintentional tort of the City or its officials or employees occurring in the course of conducting the RFA process,

(c) the Applicant preparing and submitting the Application;

(d) the City accepting or rejecting the Application or any other submission; or

(e) the manner in which the City: reviews, considers, evaluates or negotiates any application; addresses or fails to address any application or applications; resolves to enter into a Contract or not enter into a Contract or any similar agreement; or the identity of the applicant(s) or other persons, if any, with whom the City enters any agreement respecting the subject matter of the RFA.

6.2 Indemnity by the Applicant

Except only and to the extent that the City breaches Section 8.2 of this Appendix 1, the Applicant indemnifies and will protect, save and hold harmless the City, its officials, its agents and its employees from and against all Losses, in respect of any claim or threatened claim by the Applicant or any of its proposed subcontractors or agents alleging or pleading:

(a) any alleged (or judicially determined) breach by the City or its officials or employees of the RFA (it being agreed that, to the best of the parties' knowledge, the City has no obligation or duty under the RFA which it could breach (other than wholly unanticipated obligations or duties merely alleged or actually imposed judicially));

(b) any unintentional tort of the City or its officials or employees occurring in the course of conducting the RFA process, or

(c) liability on any other basis related to the RFA or the application process.

6.3 Limitation of City Liability

In the event that, with respect to anything relating to the RFA or this application process (except only and to the extent that the City breaches Section 8.2 of this Appendix 1), the City or its officials, agents or employees are found to have breached (including fundamentally breached) any duty or obligation of any kind to the Applicant or its subcontractors or agents whether at law or in equity or in contract or in tort, or are found liable to the Applicant or its subcontractors or agents on any basis or legal principle of any kind, the City's liability is limited to a maximum of $100, despite any other term or agreement to the contrary.

7 DISPUTE RESOLUTION

Any dispute relating in any manner to the RFA or the application process (except to the extent that the City breaches this Section 7 or Section 8.2 of this Appendix 1, and also excepting any disputes arising between the City and the Applicant under a Contract (or a similar contract between the City and an applicant other than the Applicant)) will be resolved by arbitration in accordance with the *Commercial Arbitration Act* (British Columbia), amended as follows:

(a) The arbitrator will be selected by the City's Director of Legal Services;

(b) Section 6 of this Appendix 1 will: (i) bind the City, the Applicant and the arbitrator; and (ii) survive any and all awards made by the arbitrator; and

(c) The Applicant will bear all costs of the arbitration.

8 PROTECTION AND OWNERSHIP OF INFORMATION

8.1 RFA and Application Documents City's Property

(a) All RFA-related documents provided to the Applicant by the City remain the property of the City and must be returned to the City, or destroyed, upon request by the City.

(b) The documentation containing the Application, once submitted to the City, becomes the property of the City, and the City is under no obligation to return the Application to the Applicant.

8.2 Applicant's Submission Confidential

Subject to the applicable provisions of the *Freedom of Information and Protection of Privacy Act* (British Columbia), other applicable legal requirements, and the City's right to publicly disclose information about or from the Application, including without limitation names and prices, in the course of publicly reporting to the Vancouver City Council about the RFA, the City will treat the Application (and the City's evaluation of it), in confidence in substantially the same manner as it treats its own confidential material and information.

8.3 All City Information Confidential

(a) The Applicant will not divulge or disclose to any third parties any non-public documents or information concerning the affairs of the City which have been or are in the future provided or communicated to the Applicant at any time (whether before, during or after the RFA process). Furthermore, the Applicant agrees that it has not and must not use or exploit any such non-public documents or information in any manner, including in submitting its Application.

(b) The Applicant now irrevocably waives all rights it may have by statute, at law or in equity, to obtain any records produced or kept by the City in evaluating its Application (and any other submissions) and now agrees that under no circumstances will it make any application to the City or any court for disclosure of any records pertaining to the receipt, evaluation or selection of its Application (or any other submissions) including, without limitation, records relating only to the Applicant.

9 NO CONFLICT OF INTEREST / NO COLLUSION / NO LOBBYING

9.1 Declaration as to no Conflict of Interest in RFA Process

(a) The Applicant confirms and warrants that there is no officer, director, shareholder, partner, employee or contractor of the Applicant or of any of its proposed subcontractors, or any other person related to the Applicant's or any proposed subcontractor's organization (a "person having an interest") or any spouse, business associate, friend or relative of a person having an interest who is: (i) an official or employee of the City; or (ii) related to or has any business or family relationship with an elected official or employee of the City, in each case, such that there could be any conflict of interest or any appearance of conflict of interest in the evaluation or consideration of the Application by the City, and, in each case, except as set out, in all material detail, in a separate section titled "Conflicts; Collusion; Lobbying" in the Application.

(b) The Applicant confirms and warrants that there is no person having an interest (as defined above) who is a former official, former employee or former contractor of the City and who has non-public information relevant to the RFA obtained during his or her employment or engagement by the City, except as set out, in all material detail, in a separate section titled "Conflicts; Collusion; Lobbying" in the Application.

9.2 **Declaration as to No Conflict of Interest Respecting Proposed Supply**

The Applicant confirms and warrants that neither the Applicant nor any of its proposed subcontractors is currently engaged in supplying (or is proposing to supply) goods or services to a third party such that entering into an agreement with the City in relation to the subject matter of the RFA would create a conflict of interest or the appearance of a conflict of interest between the Applicant's duties to the City and the Applicant's or its subcontractors' duties to such third party, except as set out, in all material detail, in a separate section titled "Conflicts; Collusion; Lobbying" in the Application.

9.3 **Declaration as to No Collusion**

The Applicant confirms and warrants that:

(a) the Applicant is not competing within the RFA process with any entity with which it is legally or financially associated or affiliated, and

(b) the Applicant is not cooperating in any manner in relation to the RFA with any other applicant responding to the RFA,

in each case, except as set out, in all material detail, in a separate section titled "Conflicts, Collusion, Lobbying" in the Application.

9.4 **Declaration as to Lobbying**

The Applicant confirms and warrants that:

(a) neither it nor any officer, director, shareholder, partner, employee or agent of the Applicant or any of its proposed subcontractors is registered as a lobbyist under any lobbyist legislation in any jurisdiction in Canada or in the United States of America; and

(b) neither it nor any officer, director, shareholder, partner, employee or agent of the Applicant or any of its proposed subcontractors has engaged in any form of political or other lobbying whatsoever with respect to the RFA or sought, other than through the submission of the Application, to influence the outcome of the RFA process,

in each case as set out, in all material detail, in a separate section titled "Conflicts, Collusion, Lobbying" in the Application.

10 GENERAL

(a) All of the terms of this Appendix 1 to this Application Form which by their nature require performance or fulfillment following the conclusion of the application process will survive the conclusion of such process and will remain legally enforceable by and against the Applicant and the City.

(b) The legal invalidity or unenforceability of any provision of this Appendix 1 will not affect the validity or enforceability of any other provision of this Appendix 1, which will remain in full force and effect.

(c) The Applicant now assumes and agrees to bear all costs and expenses incurred by the Applicant in preparing its Application and participating in the RFA process.

11 INDEPENDENT LEGAL ADVICE

THE APPLICANT ACKNOWLEDGES THAT IT HAS BEEN GIVEN THE OPPORTUNITY TO SEEK INDEPENDENT LEGAL ADVICE BEFORE SUBMITTING ITS APPLICATION FORM, INCLUDING THIS APPENDIX 1.

APPENDIX 2
QUESTIONNAIRE

Complete this Appendix 2 - Questionnaire in the form set out below.

Executive Summary

Each Application should have an executive summary, such as a description of the Applicant's company, purpose and history of successes, no more than one page long, describing at a high level how it is capable to provide the Requirements and services.

Applicant Company Profile

In the space below, provide a description of the Applicant's company, purpose and history of successes. If the head office of the Applicant is located within the City of Vancouver or if the Applicant is to perform any work at a site located within the City of Vancouver, this section should also indicate whether the Applicant has a valid City of Vancouver business license (or, if available, a Metro West Inter-municipal Business License).

Technical Qualifications

(Refer to Section 4.0, Part B, Expected Services)

In the space below, please demonstrate the applicant's ability to fulfill this requirement indicated on Section 4.0, Part B, Expected Services?

Safety Requirements

(Refer to Section 5.0, Part B, Expected Services)

In the space below, please demonstrate the applicant's ability to fulfill this requirement indicated on Section 5.0, Part B, Expected Services?

Use of Subcontractors

(Refer to Section 6.0, Part B, Expected Services)

In the space below, please demonstrate the applicant's ability to fulfill this requirement indicated on Section 6.0, Part B, Expected Services?

General Requirements

(Refer to Section 9.0, Part B, Expected Services)

In the space below, describe how your proposed personnel(s) involved in delivering the Services are capable of meeting the following: • Clean-up • Disposal and Recycling

Warranty

(Refer to Section 9.3, Part B, Expected Services)

In the space below, please demonstrate the applicant's ability to fulfill this requirement indicated on Section 9.3, Part B, Expected Services?

Account and Contract Management

(Refer to Section 8.0, Part B, Expected Services)

Applications should describe detail services and capabilities such as, but not limited to: contract implementation, as-if-when-needed services, technical support, reporting, issue resolution and other operational support. Applicants are to provide an overview of their account management process and hierarchy. Describe service processes and capabilities such as but not limited to: • Key contact for specific roles • Competent supervision of all work • Post contract services and performance reviews

Summary of Requirement

(Refer to Section 10.0, Part B, Expected Services)

In the space below, please demonstrate the applicant's ability to fulfill this requirement indicated on Section 10.0, Part B, Expected Services?

Work Scope

(Refer to Section 11.0, Part B, Expected Services)

In the space below, please demonstrate the applicant's ability to fulfill this requirement indicated on Section 11.0, Part B, Expected Services?

Deliverables

(Refer to Section 13.0, Part B, Expected Services)

In the space below, please demonstrate the applicant's ability to fulfill this requirement indicated on Section 13.0, Part B, Expected Services?

Vendor Performance Management

(Refer to Section 17.0, Part B, Expected Services)

Applicant shall indicate its ability to meet service levels including the as-and-when-required basis on civil/electrical contractor services during and outside operating hours, and on time billing and documentation accuracy and other issues that the City may determine as key performance indicators and/or service level agreements with the successful Applicant.

Key Personnel

(Refer to Part B, Expected Services)

In the space below, identify and provide professional biographical information for the key personnel that would perform the Applicant's work, outlining their intended roles in performing the Services. If appropriate, also attach to this Form of Application as an additional Appendix CVs and a complete organization chart, identifying all roles and areas of responsibility.

SOCIAL SUSTAINABILITY

Supplier Diversity

Vendors' are required to answer to the following question, which will be kept confidential in accordance with the Legal Terms and Conditions of this RFA.

In the space below, indicate the vendor's company profile with regards to social value and economic inclusion including recognized certifications and/or if owned/controlled by an equity-seeking demographic (including but not limited to non-profit, cooperative, Women, Indigenous Peoples, Ethno-cultural People (minorities, newcomers, immigrants), persons with disabilities or LGBTQ2+ people).	
Majority owned/controlled/ by: ☐ Women ☐ Indigenous Peoples ☐ Non-Profit/Charity (Social Enterprise) ☐ Coop ☐ Community Contribution Corporation (3C/CCC) ☐ Ethno-cultural Persons ☐ People with Disabilities ☐ LGBTQ2+ ☐ Other: please indicate	**Social / Diverse Certifications** ☐ BCorp ☐ Supplier Diversity Certification **Enviro / Other Certifications** ☐ BuySocial ☐ Living Wage ☐ Fairtrade ☐ Green Business Certification (ie. LEED, ClimateSmart) ☐ Other: please indicate
☐ **None of the above**	☐ **None of the above**

Do you have a Supplier Diversity program to include/consider equity-seeking businesses as your vendors/suppliers/sub-contractors? Y/N

a. Please provide information on how you invest in economic development of small/social/diverse businesses as your suppliers or sub-contractors.

Employment Equity & Workforce Diversity

1. Other than being an equal opportunity employer, do you have policies or programs that advance employee equity or workforce diversity and inclusion? Y/N

   a. Please describe how you advance employee equity, diversity and inclusion for under-represented populations (such as Women, Indigenous People, People with Disabilities)

2. Do you regularly conduct an employee equity "survey" or similar information/data collection on workforce diversity? Y/N

   a. Please describe how you track/monitor your workforce diversity including frequency

3. Do you source/hire from Workforce Development and/or Skill Training programs, including pre-employment support, apprenticeships or ongoing employment support, for people who are under-represented and/or face barriers to traditional employment (such as Indigenous persons, Women, youth, Minorities, People with Disabilities including mental health)? Y/N

   a. Please describe and/or use the table below

Category of Partnership Organizations	Name of the Partnership Organization(s)	# of staff (optional if makes sense)
Indigenous Peoples		
Women		
Ethno-Cultural Peoples		
People with Disabilities		
LGBTQ2+		
Youth/Seniors		
Other		

4. Do you support training for career advancement and/or skills development?
   a. If yes, please describe

5. Do you compensate at or above a Living Wage (currently $20.91/hr) Y/N

Do you provide non-mandatory benefits (i.e. extended health) to your employees? Y/N, if yes, lease describe

Workforce Diversity

Vendors' are required to answer to the following question, which is for information gathering purposes only, and will be kept confidential in accordance with the Legal Terms and Conditions.

As best known, in the space below, indicate the vendor's company profile with regards to economic inclusion supporting employment equity, diversity, inclusion and reconciliation by an equity-seeking demographic (including but not limited to Women, Indigenous Peoples, Ethno-cultural People (minorities, newcomers, immigrants), persons with disabilities or LGBTQ2+ people). *Confidential & for information only*	
Overall Workforce Diversity: % Women % Indigenous Peoples % Ethno-cultural People % People with Disabilities % LGBTQ2+ % Other: please indicate ☐ **None of the above**	**Leadership/Management/Executive Workforce Diversity:** % Women % Indigenous Peoples % Ethno-cultural People % People with Disabilities % LGBTQ2+ % Other: please indicate ☐ **None of the above**
☐ **Do not track this information** ☐ **Do not want to share this information**	

APPENDIX 3
COMMERCIAL PROPOSAL

Complete this Appendix 3 - Pricing in the form set out below.

Applicant to provide proposed pricing and payment terms, which should be in accordance with PART A, Section 7.0 of the RFA (as well as any other sections of the RFA imposing requirements as to pricing).

When its Application by email please ensure Appendix 3 – Pricing is provided as a separate file to the entire Application

☐ **By colouring in this box, the Applicant hereby confirms that the above pricing is based on the payment of wages to employees of the Applicant and Subcontractors that comply with the City's Living Wage Policy as described in Section 11.0 of Part A and in the Form of Agreement attached hereto as Part D.**

APPENDIX 4
APPLICANT'S REFERENCES

Complete this Appendix 4 – Applicant's References in the form set out below with references that are relevant to the Services set out in Part B of this RFA.

Client Name # 1	
Address (City and Country)	
Contact Name	
Title of Contact	
Telephone No.	
E-mail Address	
Length of Relationship	
Type of Goods and/or Services provided to this Client	

Client Name # 2	
Address (City and Country)	
Contact Name	
Title of Contact	
Telephone No.	
E-mail Address	
Length of Relationship	
Type of Goods and/or Services provided to this Client	

Client Name # 3	
Address (City and Country)	
Contact Name	
Title of Contact	
Telephone No.	
E-mail Address	
Length of Relationship	
Type of Goods and/or Services provided to this Client	

APPENDIX 5
CERTIFICATE OF INSURANCE

Appendix 5 is to be duly completed and signed by the Applicant's insurance agent or broker as evidence of its existing insurance, along with a letter from its insurance broker or agent indicating whether or not (and, if not, then to what extent) it will be able to comply with the insurance requirements set out in the Form of Agreement, should the Applicant be selected as a successful Applicant. (Any successful Applicant will also be required to provide proof of the satisfaction of all insurance requirements prior to or concurrently with the City entering into any Agreement.)

CITY OF VANCOUVER

CERTIFICATE OF EXISTING INSURANCE
TO BE COMPLETED AND APPENDED TO THE PROPOSAL -
PS20191847

Section 2 through 8 – to be completed and executed by the Insurer or its Authorized Representative

1. **THIS CERTIFICATE IS ISSUED TO: City of Vancouver, 453 W 12th Avenue, Vancouver, BC, V5Y 1V4**
and certifies that the insurance policy (policies) as listed herein has/have been issued to the Named Insured and is/are in full force and effect.

2. **NAMED INSURED** ***(must be the same name as the proponent/bidder and is either an individual or a legally incorporated company)***

_____

BUSINESS TRADE NAME or DOING BUSINESS AS

_____

BUSINESS ADDRESS

_____

DESCRIPTION OF OPERATION

_____

3. **PROPERTY INSURANCE (All Risks Coverage including Earthquake and Flood)**

INSURER _____
TYPE OF COVERAGE _____
POLICY NUMBER _____
POLICY PERIOD From _____ to _____

Insured Values (Replacement Cost) -
Building and Tenants' Improvements $ _____
Contents and Equipment $ _____
Deductible Per Loss $ _____

4. **COMMERCIAL GENERAL LIABILITY INSURANCE (Occurrence Form)**

Including the following extensions:
√ Personal Injury
√ Property Damage including Loss of Use
√ Products and Completed Operations
√ Cross Liability or Severability of Interest
√ Employees as Additional Insureds
√ Blanket Contractual Liability
√ Non-Owned Auto Liability

INSURER _____
POLICY NUMBER _____
POLICY PERIOD From _____ to _____
Limits of Liability (Bodily Injury and Property Damage Inclusive) -
Per Occurrence $ _____
Aggregate $ _____
All Risk Tenants' Legal Liability $ _____
Deductible Per Occurrence $ _____

5. **AUTOMOBILE LIABILITY INSURANCE** for operation of owned and/or leased vehicles

INSURER _____
POLICY NUMBER _____
POLICY PERIOD From _____ to _____

Limits of Liability -
Combined Single Limit $ _____
If vehicles are insured by ICBC, complete and provide Form APV-47.

6. ☐ **UMBRELLA OR** ☐ **EXCESS LIABILITY INSURANCE**

INSURER _____
POLICY NUMBER _____
POLICY PERIOD From _____ to _____

Limits of Liability (Bodily Injury and Property Damage Inclusive) -
Per Occurrence $ _____
Aggregate $ _____
Self-Insured Retention $ _____

7. **PROFESSIONAL LIABILITY INSURANCE**

INSURER _____
POLICY NUMBER _____
POLICY PERIOD From _____ to _____

Limits of Liability
Per Occurrence/Claim $ _____
Aggregate $ _____
Deductible Per Occurrence/Claim $ _____

If the policy is in a "CLAIMS MADE" form, please specify the applicable Retroactive Date: _____

8. **OTHER INSURANCE**

TYPE OF INSURANCE _____
INSURER _____
POLICY NUMBER _____
POLICY PERIOD From _____ to _____

Limits of Liability
Per Occurrence $ _____
Aggregate $ _____
Deductible Per Loss $ _____

TYPE OF INSURANCE _____
INSURER _____
POLICY NUMBER _____
POLICY PERIOD From _____ to _____

Limits of Liability
Per Occurrence $ _____
Aggregate $ _____
Deductible Per Loss $ _____

SIGNED BY THE INSURER OR ITS AUTHORIZED REPRESENTATIVE

_____ Dated _____

PRINT NAME OF INSURER OR ITS AUTHORIZED REPRESENTATIVE, ADDRESS AND PHONE NUMBER

_____

APPENDIX 6
DECLARATION OF SUPPLIER CODE OF CONDUCT COMPLIANCE

Complete this Appendix 6 - Declaration of Supplier Code of Conduct Compliance in the form set out below.

Purpose:
All proposed suppliers are to complete and submit this form to certify compliance with the supplier performance standards set out in the Supplier Code of Conduct.

The City of Vancouver expects each supplier of goods and services to the City to comply with the supplier performance standards set out in the City's Supplier Code of Conduct (SCC) <https://policy.vancouver.ca/AF01401P1.pdf>. The SCC defines minimum labour and environmental standards for City suppliers and their subcontractors.

Suppliers are expected to comply with the aforementioned standards upon submitting a tender, proposal, application, expression of interest or quotation to the City, or have a plan in place to comply within a specific period of time. The City reserves the right to determine an appropriate timeframe in which suppliers must come into compliance with these standards. To give effect to these requirements, an authorized signatory of each proposed vendor must complete the following declaration and include this declaration with its submission:

As an authorized signatory of _____*(vendor name),* I declare that I have reviewed the SCC and to the best of my knowledge, _____ *(vendor name)* and its proposed subcontractors have not been and are not currently in violation of the SCC or convicted of an offence under national and other applicable laws referred to in the SCC, other than as noted in the table below *(include all violations/convictions that have occurred in the past three years as well as plans for corrective action).*

Section of SCC / title of law	Date of violation /conviction	Description of violation / conviction	Regulatory / adjudication body and document file number	Corrective action plan

I understand that a false declaration and/or lack of a corrective action plan may result in no further consideration being given to the submission of _____ *(vendor name).*

Signature: _____

Name and Title: _____

APPENDIX 7
PERSONAL INFORMATION CONSENT FORM(S)

Complete one copy of this Appendix 7 - Personal Information Consent Form(s), in the form set out below, for each key personnel for whom a CV or other information regarding employment history and qualifications has been included in the Application.

PERSONAL INFORMATION CONSENT FORM

RFA

Reference #PS20191847

Title: Civil/Electrical Contractor Services

With the provision of my signature at the foot of this statement I, _____

_____ (Print Name)

consent to the indirect collection from _____

_____ (Print Name of Applicant)

of my personal information in the form of a work history, resume or summary of qualifications.

In consenting to this indirect collection, I understand that my personal information, so collected, will be used by the City for the sole purpose of evaluating the submitted response to the above-noted procurement process. I understand further that my personal information, once collected by the City, will be handled by the City in accordance with the provisions of the (BC) *Freedom of Information and Protection of Privacy Act*.

_____	)	_____
Signature	)	Date

APPENDIX 8
SUBCONTRACTORS

Complete this Appendix 8 - Subcontractors in the form set out below by listing all of the subcontractors that the Applicant proposes to use in carrying out its work under an Agreement, or state that the Applicant does not propose to use any subcontractors.

If selected to enter into an Agreement with the City, the Applicant may be limited to using subcontractors listed in its Application. If the City objects to a subcontractor listed in an Application, the City may permit an Applicant to propose a substitute Subcontractor acceptable to the City.

Subcontracted Scope		
Subcontractor		
Contact (name, title, email, telephone no.)		
Approximate Percent of the Work to be Subcontracted		
The Subcontractor's Relevant Experience (identify at least three similar projects within the last five years, including the client)	1. Project Name:	
	Client:	
	Nature of Work:	
	Value:	
	Client Contact:	
	2. Project Name:	
	Client:	
	Nature of Work:	
	Value:	
	Client Contact:	
	3. Project Name:	
	Client:	
	Nature of Work:	
	Value:	
	Client Contact:	

APPENDIX 9
PROPOSED AMENDMENTS TO FORM OF AGREEMENT

Complete this Appendix 9 – Proposed Amendments to Form of Agreement in the form set out below by detailing any proposed amendments to the Form of Agreement. If no amendments to the Form of Agreement are proposed, state "none". It is at the City's sole discretion whether or not these proposed amendments will be considered for the Form of Agreement.

Section / General Condition	Proposed Amendment	Rationale and Benefit

APPENDIX 10
CONFLICTS; COLLUSION; LOBBYING

Complete this APPENDIX 10 – Conflicts; Collusion; Lobbying in the form set out below by setting out any exceptions to the declarations in Section 9 of the Legal Terms and Conditions attached as Appendix 1 to this Form of Application or indicate that there are no exceptions, as applicable.

Exceptions to Declaration as to no Conflict of Interest in RFA Process (Section 9.1 of Legal Terms and Conditions)	
Exceptions to Declaration as to No Conflict of Interest Respecting Proposed Supply (Section 9.2 of Legal Terms and Conditions)	
Exceptions to Declaration as to No Collusion (Section 9.3 of Legal Terms and Conditions)	

APPENDIX 11
PROOF OF WORKSAFEBC CLEARANCE LETTER AND EMPLOYER REPORT CARD

Attached as APPENDIX 11, the Proponent's proof of good standing with WorkSafeBC (WorkSafeBC clearance letter) and their WorkSafeBC Employer Report Card with claims history and industry rating.

APPENDIX 12
CITY OF VANCOUVER CONTRACTOR COORDINATION PROGRAM

See attached.

Contractor Coordination Program

City Of Vancouver Contractor Coordination Program

Table of Contents

REFERENCES

- WorkSafeBC OSH Regulation
  - Section 20.3, Coordination of Multiple Employer Workplaces
- Workers' Compensation Act - Division 3:
  - Section 115 – General Duties of Employers
  - Section 118 - Coordination of Multiple Employer Workplaces & Prime Contractors
  - Section 119 - General Duties of Owner
  - Policy Item D3-115-1 - Employer Duty Towards Other Workers - Section 115(1)(a)(ii)
  - Policy Item D3-118-1 RE: General Duties - Multiple-Employer Workplaces
  - Policy Item D3-119-1 RE: General Duties - Owners

Responsibility of Owner

Reference: Part 3 Section 118 and 119 of the *Workers' Compensation Act* and Part 20 of the WorkSafeBC Regulation.

The *Workers' Compensation Act* requires the owner of the workplace to:

- Maintain the workplace in a safe manner;

- Give any other employers on the workplace all information about workplace hazards;
- Give other employers on the workplace the information they need to eliminate or control those hazards.

In addition, on multiple employer workplaces, CoV has a responsibility to:

- Coordinate activities of the employers, workers, and other persons at the workplace;
- Establish and maintain a system or process to ensure that everyone at the workplace complies with the WorkSafeBC OHS Regulation.

PURPOSE

To ensure that City of Vancouver (CoV) workers and other employers working at CoV workplaces are not placed at risk because of a lack of knowledge of workplace hazards, or a lack of coordination of workplace safety.

POLICY

CoV will ensure that:

- CoV workers and contractors hired by CoV and working at CoV workplaces are aware of any pre-existing workplace hazards known to the CoV.
- Occupational health and safety activities are coordinated on civic workplaces that are designated as multiple employer workplaces. Coordination will be done by the CoV or by the Prime Contractor designated by the CoV.
- Managers and workers understand the requirements of the *Workers' Compensation Act* and the WorkSafeBC Regulation with regards to contracting out, and follow the requirements provided in the CoV policies and procedures.
- CoV workplaces are maintained in a manner that ensures the health and safety of persons at or near the workplace.

SCOPE

This program applies to every situation where workers other than CoV workers are performing their job duties at a CoV workplace.

Exception for Short Term Workplace Visits

The WorkSafeBC Prevention Manual offers the following guidance on workplace visits: "Virtually all workplaces will be visited by workers of other employers. For example, workers may deliver or pick up mail, goods, materials or enter to inspect premises. Short term visits of this type, even if regular, do not make the

workplace a "multiple-employer workplace" for the purposes of Section 118(1)".

DEFINITIONS

Construction Project	Any erection, alteration, repair, dismantling, demolition, structural or routine maintenance, painting, land clearing, earth moving, grading, excavating, trenching, digging, boring, drilling, blasting, concreting, the installation of any machinery or any other work deemed to be construction by the Board. (WorkSafeBC OHS Regulation Section 20.1)
Contractor	Includes a contractor, subcontractor, utility company, government agency or a service company providing/assigning workers and/or services/equipment within the workplace.
Contractor Safety Program	A contractor's Occupational Health and Safety program as required by the WorkSafeBC OHS Regulation.
Multiple Employer Workplace	A workplace where workers of two or more employers are working at the same time. In this type of workplace workers of one employer do not actually have to come into contact with the workers of the other employer. They do not even have to be in the same place at the same time. What is important is whether or not the workers' activities could affect the health and safety of another employer's workers. NOTE: Short term visits by couriers, inspectors, suppliers, etc. are not regarded as workers at the workplace.
Multiple Owner Situation	More than one person may simultaneously meet the definition of the term "owner" in respect to a particular workplace. For example, both the municipality that holds legal title to land and an entity with a permit to use may qualify as owners under the *Act*. In such circumstances, referred to as multiple owner situations, all the owners of a particular workplace are responsible for fulfilling the duties set out in *WCAct*, the OHS Regulation, and any applicable orders.
Notice of Project	The Notice of Construction Project given by the Prime Contractor, or Owner, to WorkSafeBC as defined in and

	required by Section 20.2 of the Regulation.
Owner	Includes: (a) a trustee, receiver, mortgagee in possession, tenant, lessee, licensee or occupier of any lands or premises used or to be used as a workplace, and (b) a person who acts for or on behalf of an owner as an agent or delegate;
Prequalified Contractor	Prequalified contractors work for the City through an existing contractual agreement with the City. Some of the industry groupings that have prequalified status within the City include: • General electrical services • Power line services • Electrical vault (high voltage) maintenance services • General HVAC - service and preventative maintenance • General plumbing - service and preventative maintenance • Fire Protection – Fire alarm systems, fire sprinklers and fire extinguishers checks • Alarm Systems
Prime Contractor	In relation to a multiple-employer workplace, the directing contractor, employer or other person who enters into a written agreement with the owner of that workplace to be the Prime Contractor, or, if there is no agreement, the owner of the workplace. (Section 118.1 of the *Act*)
Qualified	Means being knowledgeable of the work, the hazards involved and the means to control the hazards, by reason of education, training, experience or a combination thereof.

Qualified Coordinator	At a multiple employer construction workplace, means the person appointed by the owner or the Prime Contractor to coordinate occupational health and safety activities at the worksite. (Part 20.3(2)(a) of the Regulation). The qualified coordinator needs to possess experience in and an understanding of the work, including specific work processes and equipment used. The qualified coordinator should also have the ability to provide direction to others and to be able to effectively communicate with the employers and workers present at the workplace. Ideally the qualified coordinator will possess some formal training or a trade certification that would suggest the person is capable of identifying and addressing hazards. However, a trade certification is not a specific requirement, provided that the qualified coordinator is knowledgeable of and experienced in the work being undertaken at the workplace. Reference: WorkSafeBC Regulation / Guideline G20.3-2 Qualified Coordinators
Qualified Person	Applies to every contractor hired whether it is a single employer workplace or a multiple employer workplace. On a construction workplace, means a person designated by a contractor (other than the Prime Contractor) to be responsible for that employer's health and safety activities and responsibilities.
Single Employer Workplace	A defined area in which there are workers of only one employer.
Supervisor	A **supervisor** is a person who instructs, directs, and controls workers in the performance of their duties. A **supervisor** can be any worker(management or staff, union or exempt) who meets this definition, whether or not he or she has the **supervisor** title.
Workplace Safety Coordinator	Applies where a Prime Contractor has not been designated. The person designated by CoV to coordinate workplace safety on multiple employer workplaces if there is no Prime Contractor, and to receive/review a contractor's

safety program, records, documentation and safety performance.

RESPONSIBILITIES

City of Vancouver is responsible to determine:

1. whether a workplace includes the workers of other employers;
2. whether this is a multiple employer workplace, a multiple owner workplace or a single employer workplace;
3. if the workplace is a construction workplace as outlined in the definitions.

The remaining responsibilities are separated into the following categories:

1. Single Employer Workplace
2. Multiple Employer Workplace
    a. with a Prime Contractor
    b. without a Prime Contractor
3. Multiple Owner Workplace

Single Employer Workplace

City of Vancouver

City of Vancouver is responsible to:

- Ensure that the contractor at the workplace is aware of all pre-existing workplace hazards and has the information on how to eliminate or control the hazards;
- If on a construction workplace where the work requires a Notice of Project, submit the Notice of Project to WorkSafeBC.

Workplace Safety Coordinator

The City of Vancouver Workplace Safety Coordinator is responsible to:

- Determine the boundaries of the workplace and ensure that only workers of one employer perform duties within those boundaries;
- Ensure all relevant information on workplace hazards is provided to the employer;
- Decide whether the contractor should be designated, in writing, as a Prime Contractor and if so, designate the Prime Contractor.

Contractor

Applies to a contractor to the City of Vancouver and to service providers such as

BC Hydro or gas distribution companies:

- Obtain information on workplace hazards from the City of Vancouver and inform its workers at the workplace of those hazards;
- Ensure compliance with the *Workers Compensation Act* and the WorkSafeBC OHS Regulation.

If designated as the Prime Contractor, the contractor is responsible to:

- Ensure that all workers at the workplace, as well as its own workers, are aware of the pre-existing workplace hazards;
- Ensure that all work is performed without unnecessary risk and in compliance with the *Workers Compensation Act* and the WorkSafeBC OHS Regulation.

City of Vancouver Supervisors

- Ensure that all workers know that a single employer workplace has been designated;
- Ensure they do not assign duties which take City of Vancouver workers into the single employer workplace;
- Contact their supervisor to determine if the work should go ahead if any worker reports that they must enter the single employer workplace to do their job.

City of Vancouver Workers

- Ensure that their duties do not take them into the single employer workplace;
- Inform their supervisor if they must enter the workplace.

Multiple Employer Workplace

Multiple Employer Workplace Without a Prime Contractor

City of Vancouver

The City of Vancouver is responsible to:

- Designate the Manager responsible for the project to be responsible for coordinating workplace safety;
- Ensure that all health and safety activities are coordinated;
- Ensure that all employers comply with the *Workers Compensation Act* and WorkSafeBC OHS Regulation.

Workplace Safety Coordinator

Ensure that:

- All employers on the workplace are aware of pre-existing workplace hazards;
- Workplace safety meetings are held and documented;
- All occupational health and safety activities are coordinated;
- If the site is a construction workplace where the work requires a Notice of Project, that the Notice of Project is submitted to WorkSafeBC.

Construction workplaces

The Manager responsible for the project is responsible to:

- Ensure that written procedures to protect the health and safety of all workers are available on the worksite;
- Maintain a workplace map that shows where all employers are working, where occupational first aid is located, explains the emergency transportation system (where required), and the location of evacuation marshaling points.

Contractors

- Comply with their contracted safety requirements and the directives of the City of Vancouver Manager responsible for the project regarding coordination of activities;
- Inform the City of Vancouver Manager responsible for the project of the name of the individual who supervises their workers;
- Give the City of Vancouver Manager responsible for the project the name of a Qualified Person who is responsible for their health and safety activities.

Supervisors

- Ensure that the duties that they are assigning do not cause hazards for the workers of other employers on the workplace.

Workers

- Follow safe work procedures, and
- Alert their supervisor if the duties that they are performing may create a hazard to other workers.

Multiple Employer Workplaces With A Prime Contractor

City of Vancouver

- Identify workplace hazards for the Prime Contractor and give the Prime Contractor information on how to eliminate or control hazards in the workplace.

Workplace Safety Coordinator

- Designate a Prime Contractor based on the complexity and risk of the work being performed;
- When a Prime Contractor is designated, inform all other employers of the designation.

Prime Contractor

Ensure that:

- All occupational health and safety activities are coordinated;
- All employers on the workplace comply with the *Workers Compensation Act*, and the WorkSafeBC OHS Regulation; and
- If the workplace is a construction workplace with a combined workforce of more than 5 workers, identify a qualified coordinator who must coordinate health and safety activities on the workplace.

Prime Contractor's Qualified Coordinator on Construction Workplaces

The qualified coordinator must:

- Ensure that all employers on the workplace are aware of pre-existing workplace hazards;
- Ensure that workplace safety meetings are held and documented;
- Coordinate all health and safety activities;
- Complete a Notice of Project and submit it to WorkSafeBC;
- Maintain a workplace map that shows where various employers are working, where first aid is located, the emergency transportation system for injured workers, and the evacuation marshalling points;
- Have the written procedures to protect the health and safety of the workers on the workplace, ensuring that the hazards are addressed throughout the duration of the work activity.

Other Contractors

Other contractors are responsible to:

- Deliver to the Prime Contractor's Qualified Coordinator the name of the person who supervises their workers.

On a construction workplace, the contractors must:

- Designate a Qualified Person to be responsible for that contractor's health and safety activities;
- Provide the name of the Qualified Person to the Prime Contractor.

City of Vancouver Supervisors

Supervisors are responsible to:

- Be knowledgeable of the Prime Contractor's safety program and the measures in place to eliminate or control workplace hazards;
- Ensure that all City of Vancouver workers comply with this safety program;
- Remove workers under their control from any danger and notify the Project Manager

City of Vancouver Workers

Workers must comply with the workplace safety program of the designated Prime Contractor.

Multiple Owner Workplace

City of Vancouver

The City of Vancouver is responsible to:

- Ensure that the workplace is safe and that all workers, including the other Owner, Employer, Contractors and their employees, are aware of the workplace hazards which the City of Vancouver has knowledge of as owners.
- If there are no interactions, or overlap between workplaces that would create hazards for the workers of the other Employer or for the workers of the City of Vancouver, no further action is required.

PROGRAM DETAILS

Pre-contract Hazard Assessment

Contractors must be made aware of all of the pre-existing workplace hazards that may affect their workers.

Workplace hazard identification must be completed prior to putting a project out to tender. This will be done by the project manager and the site.

Hazard identification should include, but not be limited to:

- workplace access difficulties
- confined spaces
- chemical exposures
- excavations
- work at heights
- lockout
- electrical hazards
- asbestos
- lead
- temperature extremes
- noise
- workplace hazardous materials
- traffic

Any other known or foreseeable workplace hazards must also be identified.

Providing methods to eliminate or control workplace hazards will include providing the contractor with any CoV procedures relating to the identified hazards. If the contractor is going to do work that is not covered by the CoV safety program, then once the hazards are identified, the contractor must provide written safe work procedures for the work.

Day Labour

Periodically, a contractor will come onto a workplace to perform work in co-operation with CoV workers without subcontractors. CoV accepts a significant amount of liability if workers of the CoV supervise these contract workers, or where a supervisor is hired on contract to oversee the activities of these contract workers.

Consideration must be given to designating these contractors as Prime Contractors. If they are not designated as Prime Contractors, CoV will likely be liable for any violations of the WorkSafeBC Regulation by the contractors as the COV is considered a “sophisticated employer” to WorkSafeBC.

Designating a contractor as the Prime Contractor does not necessarily mean that the CoV will not be liable for any safety violation by the contractor. For instance, if supervision by COV of the contract workers is required for the project, the CoV will be liable. Therefore, all day-labour contracts must be reviewed by the CoV manager responsible for the project to determine how the contract workers will be supervised, who will supervise and if the COV is supervising, is the COV willing to take on any potential liability?

NOTE: A **supervisor** is a person who instructs, directs, and controls workers in the performance of their duties. A **supervisor** can be any worker (management or staff, union or exempt) who meets this definition, whether or not he or she has the **supervisor** title.

Multiple Employer Workplaces

Multiple employer workplaces are created when the workers of two or more employers are working at the same location. They do not both have to be working all of the time. If they are both at the workplace and the activities of either employer can affect the health and safety of workers of the other employer, then the workplace becomes a multiple employer workplace.

When CoV has contractors on a multiple employer workplace, there is a requirement for coordination of activities.

CoV Manager responsible for the project can fulfill this coordination role, or it can be delegated to a contractor who is designated, in writing, as Prime Contractor.

Contractors must give the CoV Manager responsible for the project, or the Prime Contractor, the names of the individuals who will be supervising their workers.

On a construction workplace, contractors must also provide the name of the Qualified Person who will be responsible for their health and safety program.

Prime Contractor Designation

CoV must carefully decide whether to designate a contractor in writing as the Prime Contractor.

The responsibility for coordination of activities at the workplace, and for ensuring compliance with the *Workers Compensation Act* and the WorkSafeBC OHS Regulation will rest with the Prime Contractor.

Prime Contractors must be made aware of all of the pre-existing workplace hazards that might put their workers at risk. They must also be given the information that they need on how to eliminate or control those hazards.

CoV may decide at any time to appoint a Prime Contractor on a multiple employer workplace. CoV can also appoint one contractor to be the Prime Contractor on a single employer workplace.

If the CoV appoints a Prime Contractor all other affected contractor(s) will be given written notice.

Workplace Safety Requirements of the Prime Contractor

The Prime Contractor must:

- Ensure work is done in a safe manner that complies with all regulatory requirements;
- Direct and coordinate the work activities related to the health and safety of all contractors and any other workers on the workplace;
- Have a supervisor readily available at the workplace. This supervisor will have the necessary skills, qualifications and experience to coordinate the health and safety activities of the worker;
- Obtain from the organization written information on hazards and conditions and the methods to address the hazards and conditions and will circulate this information;
- Ensure first aid facilities are provided and maintained on the workplace in accordance with Part 33 of the WorkSafeBC OHS Regulation;
- Take all reasonable steps to ensure that the occupational health and safety activities of all Contractors and their workers comply with the WorkSafeBC OHS Regulation;
- Immediately give the project manager the name of any contractor who does not co-operate, assist or do what the qualified coordinator requires regarding coordination of health and safety activities within the workplace.

Workplace Safety Requirements of All Contractors

Prior to starting any work at the workplace, the Contractor must:

- Have its own Safety Program (Review of Contractor Safety Program form is in Appendix A) ;
- Ensure the safety program meets the requirements of Part 3 of the *Workers' Compensation Act* and Part 3 of the WorkSafeBC OHS Regulation.

At non-construction workplaces, the Contractor will:

- Ensure there is a supervisor at the workplace who has the necessary skills

and experience to run the Contractor's Safety Program;

- At the start of work, the Contractor will provide the client in writing, the names of all supervisors;
- the client or Prime Contractor, must be immediately informed of any changes.

At construction workplaces, the Contractor will:

- Ensure there is a Qualified Person present who has the necessary skills and experience to run the Contractor's Safety Program;
- At the start of work, the Contractor will provide the client or the Prime Contractor, in writing the name of the Qualified Person;
- the client or Prime Contractor, must be immediately informed of any changes.

The Contractor must:

- Ensure that a Joint Occupational Health and Safety (JOHS) Committee is formed for the workplace if required by the *Workers Compensation Act*, and that the activities of the JOHS Committee meet the requirements of the *Act*;
- Advise the client or the Prime Contractor, of any accidents or incidents at the workplace that must be reported to WorkSafeBC;
- Inform all persons working on the workplace of the health and safety requirements at the workplace.

At all times the contractor will ensure that its workers and subcontractors and all other workers coming onto the workplace will:

- Comply with the *Workers Compensation Act* and the WorkSafeBC OHS Regulation;
- Comply with the contractor's safety program;
- Comply with the client's (or Prime Contractor's) safety requirements for the work activities within the workplace;
- Provide occupational health and safety records and documentation to the client] or Prime Contractor;
- Follow the directions of the client or the Prime Contractor on all matters relating to occupational health and safety;
- Inform the client or the Prime Contractor of any information that they require to coordinate each employer's work activities within the workplace.

Additional Requirements for Construction Workplaces

Reference:

- WorkSafeBC OHS Regulation Part 20.

At construction workplaces the Prime Contractor will:

- Notify WorkSafeBC by a Notice of Project that it is the Prime Contractor;
- Have a qualified coordinator readily available at the workplace. The qualified coordinator will have the necessary skills, qualifications and experience to coordinate the occupational health and safety activities of all employers on the worksite.

Before the work begins, the Prime Contractor will provide the client with the following information:

- A copy of the Notice of Project (for construction projects);
- Written confirmation that the Prime Contractor's safety program is in place;
- The name of the qualified coordinator;
- Any changes of appointment.

For construction projects, the Prime Contractor will post a copy of the Notice of Project in prominent locations within the workplace to ensure that all employers know that, as Prime Contractor, it has responsibility for coordinating the work activities related to occupational health and safety matters of all contractors.

Prime Contractor's Health and Safety Records

The Prime Contractor must:

- Maintain all occupational health and safety documentation at one location at or near the workplace and make the documentation available to the client (See Appendix B for a list of the required documentation);
- Ensure that its Qualified Coordinator collects records of all JOHS Committee proceedings at the workplace and distributes them to other qualified persons working within the workplace and to WorkSafeBC;
- In the event of an accident that requires notification of WorkSafeBC at the same time, notify the client about the accident;
- If requested, provide information on the progress of the investigation and coordinate all responses to requests for information with CoV.

Workplace Safety Coordinator

If a Prime Contractor is appointed, the Project Manager will be the CoV workplace representative and have duties and responsibilities that include but are not limited to the following:

- Ensure all contractors are informed of appointment of the Prime Contractor;
- Inform the Prime Contractor that they must be copied in all communications;
- Monitor the Prime Contractor's compliance with the safety requirements of the contract;
- Ensure that CoV workers do not direct or supervise any contractor's workers on the workplace;
- Receive and/or distribute all necessary documentation;
- Ensure that all pre-existing hazards of the workplace and procedures for addressing the hazards are conveyed to the Prime Contractor.

If there is no designated Prime Contractor on a multiple employer workplace, the project manager or site supervisor is responsible to:

- Coordinate the activities of all employers at the workplace;
- Watch for and control situations where the work of one contractor or a worker of CoV could cause a hazard to the workers of another contractor;
- At construction workplaces, maintain the location of first aid and evacuation marshaling points, and maintain the written procedures that will be used to ensure the safety of workers in the workplace;
- Ensure that employers coming onto the worksite have written safe work procedures.

See Appendix C for a Confirmation of Responsibilities form. Appendix D shows a Summary of Responsibilities

.

TRAINING REQUIREMENTS

Goal

To ensure that no workers will be put at risk and to minimize the liability to CoV as a result of workers of another employer performing duties on a workplace owned by the organization.

Objectives

This training will ensure workers will:

- Understand the CoV's policy on contractor coordination;
- Understand the difference between a single employer workplace and a multiple employer workplace;
- Know what their responsibilities are and understand the responsibilities of other workers;
- Understand the components of the pre-job hazard assessment;
- Understand the requirements for coordination and supervision on day labor jobs.

Summary of Training

- Why workplace safety coordination is necessary
- The responsibilities for workplace safety coordination
- How to determine if workplace coordination is required
- The effects of Part 3 of the *Workers' Compensation Act* on contractor coordination
- The definitions used in the contractor coordination program
- When to designate a Prime Contractor
- The differences between construction workplaces and other workplaces for contractor coordination
- Typical hazards that must be addressed
- How to perform pre-job hazard assessment
- Definitions and concerns on day labour jobs
- How to complete forms and documentation
- Correct responses to typical situations

PROGRAM MAINTENANCE

Programs within the Safety Management System are reviewed periodically by the Joint Health and Safety Committees. SMS EY P 029 Inspection Audit Review Program contains further details.

This program will be reviewed annually. The review will focus on the number of situations when other employers were on the CoV's workplace, and whether any liability accrued to the organization as a result.

DOCUMENTATION

The documentation for this program includes:

- Contract template that includes language concerning Prime Contractor
- Safety program with names or positions of those responsible for coordination
- Pre-job hazard assessments
- Completed reviews of contractor safety programs
- Documentation of discussions with contractors regarding supervision

APPENDICES

Appendix A - Review of Contractor Safety Program

Date: _____ Contractor: _____

Reviewed by: _____ Job Title: _____

In order to comply with the WorkSafe BC OSH Regulation the following elements of a basic Contractor's written safety program must be present and functioning:

- Policy statement
- Inspection of premises
- Supplementary instructions
- Management meetings
- Investigation of accidents
- Records and statistics
- Joint Health & Safety Committee
- Instruction and supervision of workers
- First Aid
- WHMIS

Confirmation of Elements

Element	Yes	No	Comments
1. Policy The policy clearly states the employer's aims and the responsibilities of the employer, managers, supervisors and workers.	☐	☐	
2. Inspection of Premises Provision for Regular inspection of the premises, equipment, work methods and work practices, including specific instruction that states the intent of inspections, who is to inspect, what is to be inspected and inspection frequency	☐	☐	
3. Written Instructions Appropriate written instructions to supplement the WorkSafe BC Occupational Safety & Health Regulation. Copies of the instructions must be made available for reference by all employees.	☐	☐	
4. Management Meetings Provision for holding periodic meetings for the purpose of reviewing health and safety activities and accident trends, and for determining necessary action.	☐	☐	
5. Investigation of Accidents Provision for the prompt investigation of accidents including what to report to WorkSafe BC, which accidents to investigate, the intent of the investigation, and the content, distribution and follow-up of reports.	☐	☐	

Element	Yes	No	Comments
6. Records and Statistics Instruction is given to maintain records and statistics that include reports of inspections and accident investigations, and making this information available to the Joint Health and Safety Committee and workers.	☐	☐	
7. Joint Health & Safety Committee Provisions is made for establishing and maintaining a committee including membership, function and detailed duties	☐	☐	
8. Instruction of Workers Provision is made for instruction and supervision of workers in the safe performance of their work.	☐	☐	
9. Occupational First Aid Services and Equipment Written instructions directing the services and equipment to be provided, the maintenance of a treatment record book, the procedure to follow to summon a first aid attendant and the reporting of injuries.	☐	☐	
10. Workplace Hazardous Materials Information System Written instructions that assign responsibility for the program, provide direction on maintaining material safety data sheets and labels, and detail the education and training.	☐	☐	

Notes/Follow-up: _____

Appendix B - Records to be Maintained and Available

The documents that are required to be maintained and made available by the Prime Contractor include, but are not necessarily limited to:

- The Prime Contractor's written safety program
- All notices which the Prime Contractor is required to provide to WorkSafeBC by the WorkSafeBC OHS Regulation
- Any written summary of remedial actions taken to reduce occupational health and safety hazards within the area of responsibility
- All directives and inspection reports issued by WorkSafeBC
- Reports on injuries and incidents occurring within the Prime Contractor's area of responsibility for which notification to WorkSafeBC is required
- Records of all safety meetings held between contractors and their workers
- Records of employee health and safety orientation
- Written evidence of' inspections within the workplace
- Occupational first aid records
- Worker training records
- Written safe work procedure

Appendix C - Confirmation of Responsibilities

Discussion with Contractor Supervisor or Coordinator

Date: _____ Meeting Location: _____

Contractor: _____

Contractor Representative: _____ Job Title: _____

CoV Representative: _____ Job Title: _____

The Contractor:	YES	NO
a. Acknowledges the appointment as Prime Contractor.	❑	❑
b. Understands that in any conflict of directions, the WorkSafeBC OHS Regulation and/or the *Workers' Compensation Act* shall prevail.	❑	❑
c. Understands and will direct that all supervisors/coordinators must immediately report any apparent conflict as described above.	❑	❑
d. Understands that the supervisor shall immediately notify the CoV of any reported conflict.	❑	❑
e. Has requested and received information to eliminate or control hazards to the health and safety of persons at the workplace.	❑	❑
f. Has conducted an inspection of the workplace to verify the presence of any hazards.	❑	❑
g. Will communicate hazards to any persons who may be affected and ensure that appropriate measures are taken to effectively control or eliminate the hazards.	❑	❑
h. Accepts that written documentation (e.g. notes, records, inspections, meetings etc.) on all health and safety issues must be available at the workplace and provided to the CoV and/or to a WorkSafeBC officer upon request.	❑	❑
i. Will confirm that all workers are suitably trained and competent to perform the duties for which they have been assigned.	❑	❑
j. Agrees that safety orientation of all new workers will be conducted.	❑	❑
k. Has provided a copy of his/her company's written Safety Program.	❑	❑
l. Agrees that meetings to exchange any safety issues, concerns, hazards or safety directives will be conducted at least weekly (more often if required).	❑	❑
m. Agrees that, before the commencement of work, crews will attend a daily crew safety meeting.	❑	❑
n. Has assessed and will coordinate the first aid requirements.	❑	❑
o. Has established a transport of injured worker procedure (where required).	❑	❑

Contractor Rep:

_____ _____
Name Signature

CoV Rep:

_____ _____
Name Signature

Appendix D - Summary of Responsibilities

City of Vancouver must ensure a safe workplace.

- This is an overriding requirement of the *Workers Compensation Act* (WCAct) Section 119 General Duties – Owner.

City of Vancouver must identify multiple employer workplaces.

- Multiple employer workplaces are created when workers of 2 or more employers are working at the same location. City of Vancouver would be considered one employer.
- Workers of one employer do not have to actually come in contact with the workers of the other employer or be in the same place at the same time. The workers activities could affect the health and safety of another employer's workers.
- Short term visits by couriers, inspectors, suppliers, etc. are not regarded as workers at the workplace.

If no Prime Contractor then City of Vancouver coordinates activities

- City of Vancouver is responsible for the coordination of activities at the workplace and for ensuring compliance with the WCAct and the WorkSafeBC OHS Regulation.
- City of Vancouver must do everything that is reasonably practicable to establish and maintain a system to ensure compliance with the WCAct and the WorkSafeBC OHS Regulation.
- City of Vancouver must obtain from each contractor the names of the persons designated to supervise the workers.

City of Vancouver designates contractor as Prime Contractor.

- City of Vancouver may enter into a written agreement with a contractor if COV wishes that contractor to be designated as Prime Contractor.
- There can be only one Prime Contractor at any one workplace at any one point in time.
- City of Vancouver must give the Prime Contractor all the information necessary to identify and eliminate or control the hazards to the health and safety of persons in the workplace.
- City of Vancouver must ensure that the Prime Contractor coordinates health and safety activities for the site.

Construction Workplace

- On multi-employer construction workplaces with a combined workforce of more than 5, the Prime Contractor or the City of Vancouver must appoint a Qualified Coordinator.
- City of Vancouver must ensure that each employer gives the qualified workplace coordinator the names of the supervisors and Qualified Persons designated to be responsible for that employer's health and safety activities.
- The Qualified Coordinator must have a workplace drawing showing project layout, first aid facilities, emergency transportation provisions, and evacuation marshaling stations.
- The Qualified Coordinator must have a set of construction procedures designed to protect the health and safety of workers at the workplace.

APPENDIX 13
CITY OF VANCOUVER STANDARD DETAILED DRAWINGS

See attached for details:

1) Standard Detail Drawings – General Details

2) Standard Detailed Drawings – Electrical

3) Standard Detailed Drawings – Concrete Base

4) COV Standard Underground Duct Configurations for Street Lighting/TS/COMM

General Details

Sheet Number	Sheet Title	Description
G0.1	DRAWING INDEX	GENERAL DETAILS
G4.1	TRENCHING	TYPICAL UTILITY TRENCH
G4.2	TRENCHING	WATERWORKS DISTRIBUTION TRENCH
G4.3	TRENCHING	WATERWORKS TRANSMISSION TRENCH
G4.4	TRENCHING	TWIN SEWER TRENCH
G4.5	TRENCHING	SEWER FORCE MAIN TRENCH
G4.6	TRENCHING	RIGID CIRCULAR SEWER PIPE BEDDINGS
G4.7	TRENCHING	DEVELOPMENT SITES DUCT TRENCH
G5.1	SURFACE RESTORATION	RESIDENTIAL (LIGHT DUTY) - STREETS/LANES
G5.2	SURFACE RESTORATION	HIGHER-ZONED - STREETS/LANES
G5.3	SURFACE RESTORATION	INDUSTRIAL, ARTERIAL, & BUS ROUTES
G5.4	SURFACE RESTORATION	P.C.C. BASE
G5.5	SURFACE RESTORATION	PORTLAND CEMENT CONCRETE
G5.6	SURFACE RESTORATION	CUT REPAIR EDGE TREATMENT
G5.7	SURFACE RESTORATION	REHABILITATION OF MONOLITHIC CURB
G6.1	UTILITIES	CASING PIPE DETAILS
G6.2	UTILITIES	CASING PIPE DETAILS
G9.1	BACKFILL	BUILDING SITE BACKFILL
G9.2	BACKFILL	ENGINEERED SOIL BACKFILL
G10.1	TREES	PROTECTION OF BOULEVARD TREES ADJACENT TO CONSTRUCTION SITES
G10.2	TREES	FOUR PIECE TREE SURROUND
G11.1	PLANTING	GRASS AREA - SEEDED
G11.2	PLANTING	SHRUB & GROUND COVER PLANTING
G11.3	PLANTING	MEDIAN PLANTING

CITY OF VANCOUVER	STANDARD DETAIL DRAWINGS ENGINEERING SERVICES - VANCOUVER, B.C.	DRAWING No. G4.1

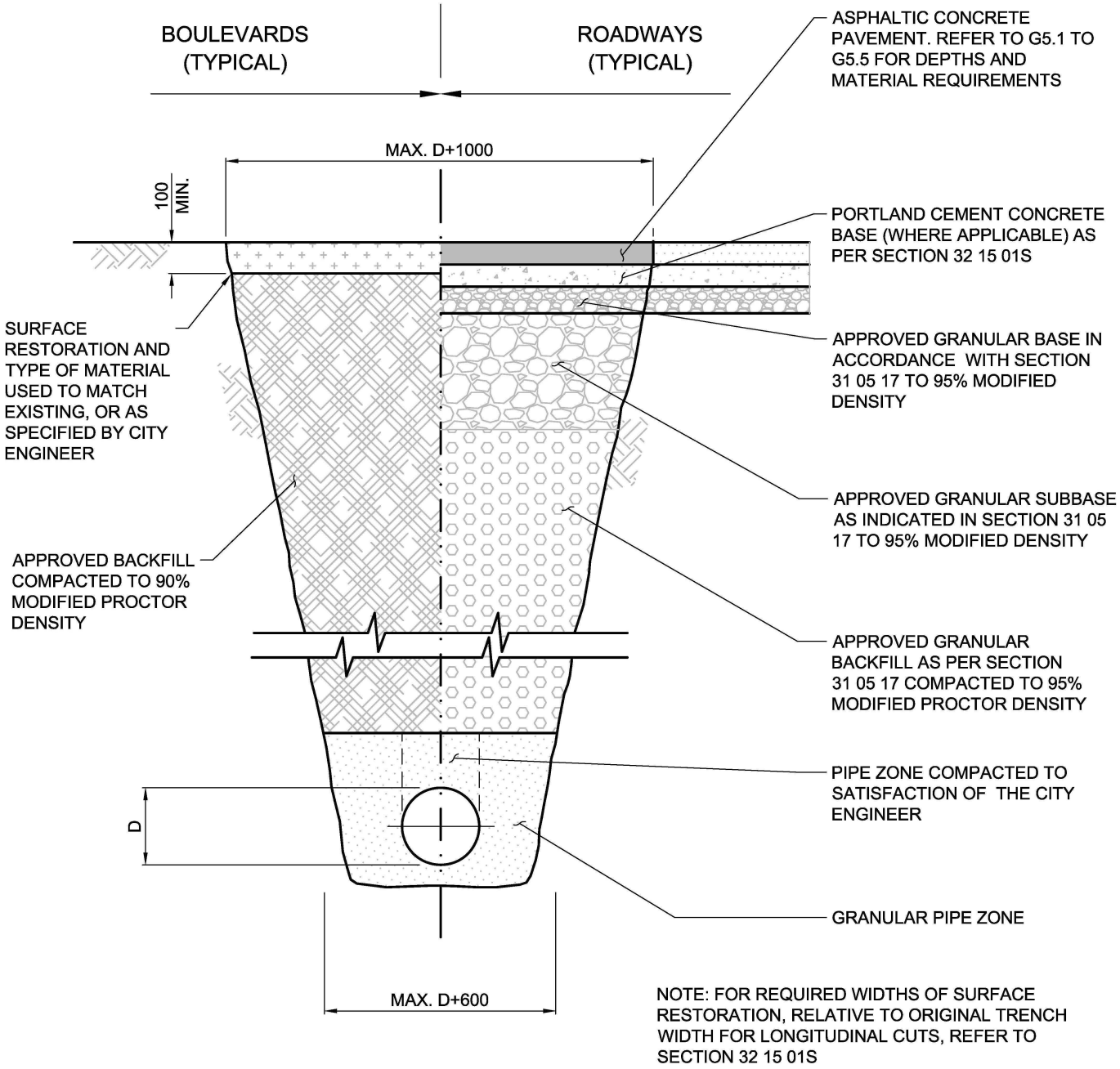

NOTE: FOR REQUIRED WIDTHS OF SURFACE RESTORATION, RELATIVE TO ORIGINAL TRENCH WIDTH FOR LONGITUDINAL CUTS, REFER TO SECTION 32 15 01S

NOTES:

1. ALTERNATIVE ENGINEERED PAVEMENT STRUCTURES MAY BE CONSIDERED, UPON APPROVAL OF THE CITY ENGINEER.
2. FOR UTILITY SPECIFIC TRENCH DETAILS, REFER TO DWG G4.2 TO G4.7.
3. PAVEMENT STRUCTURE (ASPHALT PAVEMENT, GRANULAR BASE, AND GRANULAR SUBBASE) DEPENDENT ON TYPE OF ROAD; REFER TO DWG G5.1 THROUGH DWG G5.5).
6. ALL DIMENSIONS IN MILLIMETERS UNLESS STATED OTHERWISE.

SCALE: N.T.S.

REV.	REVISION DATE	APPROVED

TRENCHING
TYPICAL UTILITY TRENCH

ISSUE DATE: SEPTEMBER 2018
APPROVED BY: J. LEE

CITY OF VANCOUVER	STANDARD DETAIL DRAWINGS ENGINEERING SERVICES - VANCOUVER, B.C.	DRAWING No. G4.2

TYPICAL RESIDENTIAL TRENCH CROSS SECTION

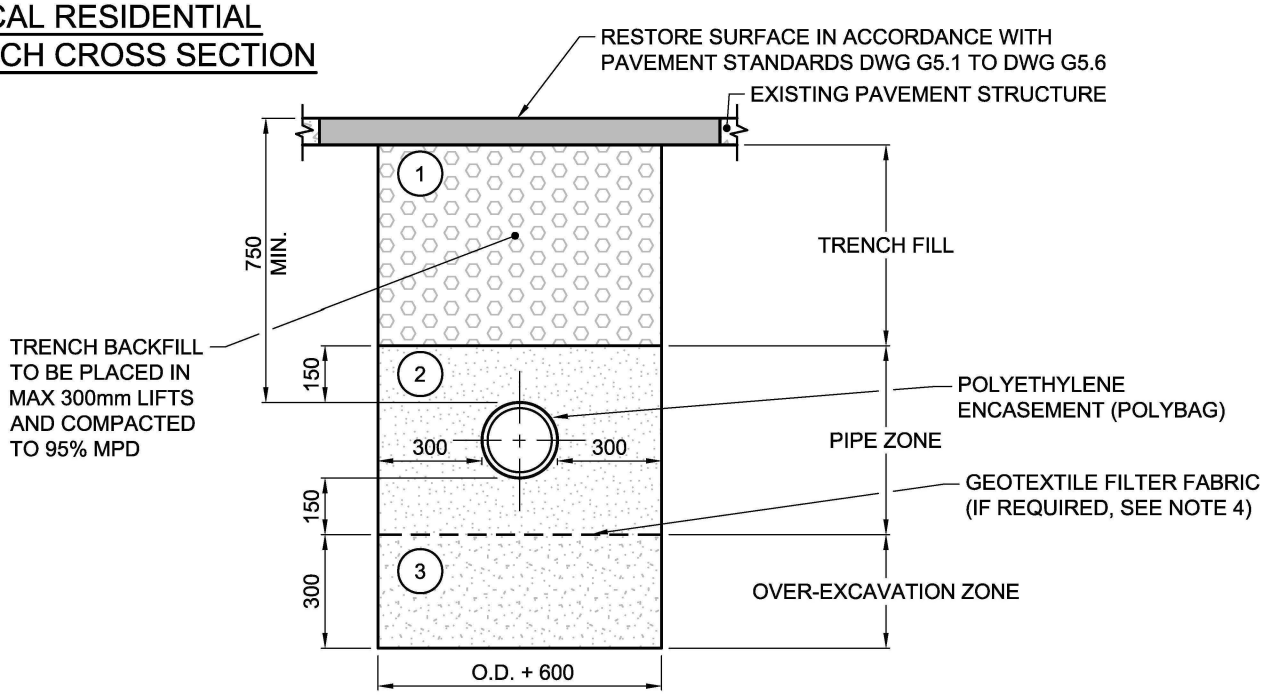

TYPICAL ARTERIAL TRENCH CROSS SECTION

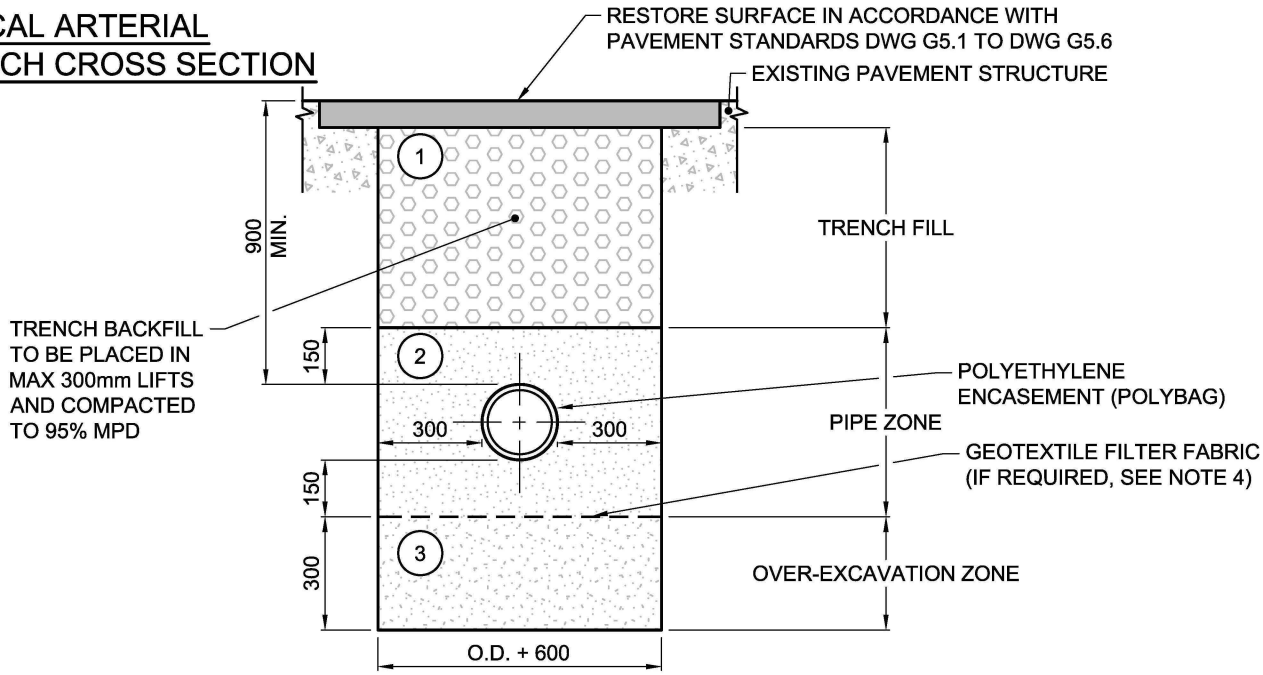

NOTES:

1. TRENCH FILL: APPROVED 19mm MINUS COMBINED CRUSHED AGGREGATE FILL (COV #9) COMPACTED TO 95% MODIFIED PROCTOR.
2. PIPE ZONE: APPROVED SAND FILL (COV #17) COMPACTED TO 95% MODIFIED PROCTOR.
3. OVER-EXCAVATION ZONE (IF REQUIRED): APPROVED 75mm MINUS CRUSHED TAILINGS (COV #13) COMPACTED TO 95% MODIFIED PROCTOR OR APPROVED 20mm CLEAR CRUSHED AGGREGATE (COV #15) IF GROUNDWATER IS A PROBLEM.
4. GEOTEXTILE FABRIC LAYER: PLACE ABOVE OVER-EXCAVATION ZONE ONLY IF SAND IS USED IN THE PIPE ZONE ABOVE DRAIN ROCK IN THE OVER-EXCAVATION ZONE. USE TYPE OF FABRIC AS SPECIFIED BY ENGINEER.
5. PROTRUDING ROCK, BOULDERS, LARGE STONES, FOREIGN MATERIAL AND SHORING MUST BE REMOVED TO MAINTAIN A MINIMUM CLEARANCE OF 150mm AROUND ALL PIPES, VALVES AND FITTINGS BEFORE COMPACTION.
6. ALL DIMENSIONS IN MILLIMETERS UNLESS STATED OTHERWISE.

SCALE: N.T.S.

REV.	REVISION DATE	APPROVED

TRENCHING
WATERWORKS DISTRIBUTION TRENCH

ISSUE DATE: SEPTEMBER 2018
APPROVED BY: E. LIAO

CITY OF VANCOUVER	STANDARD DETAIL DRAWINGS ENGINEERING SERVICES - VANCOUVER, B.C.	DRAWING No. G4.3

TYPICAL TRANSMISSION WATER MAIN TRENCH CROSS SECTION

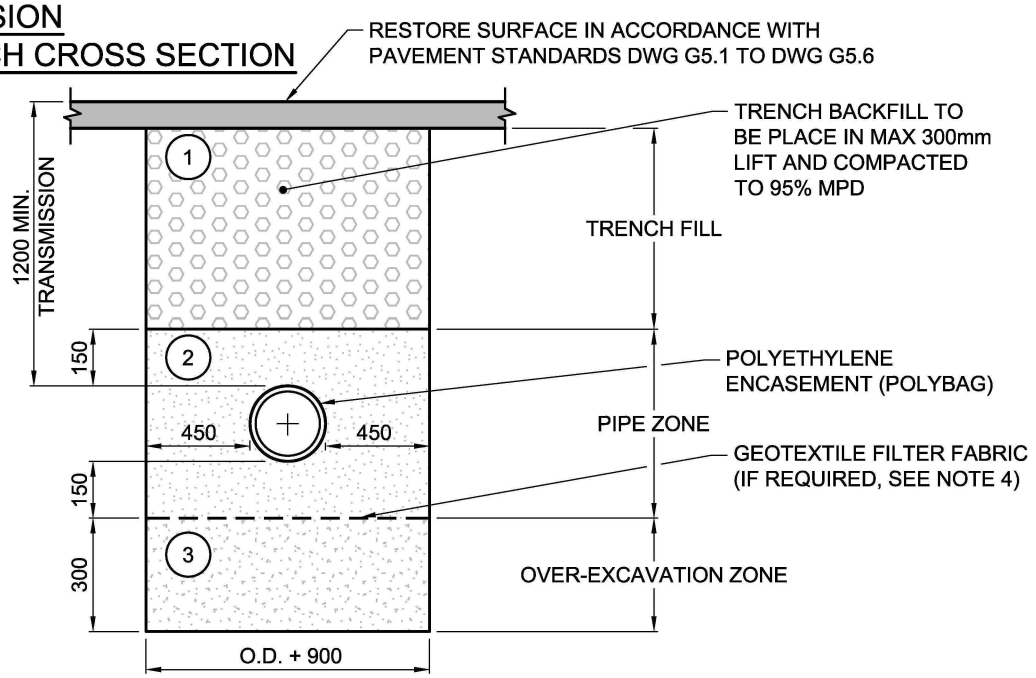

TYPICAL TWIN TRANSMISSION & DISTRIBUTION WATER MAIN TRENCH CROSS SECTION

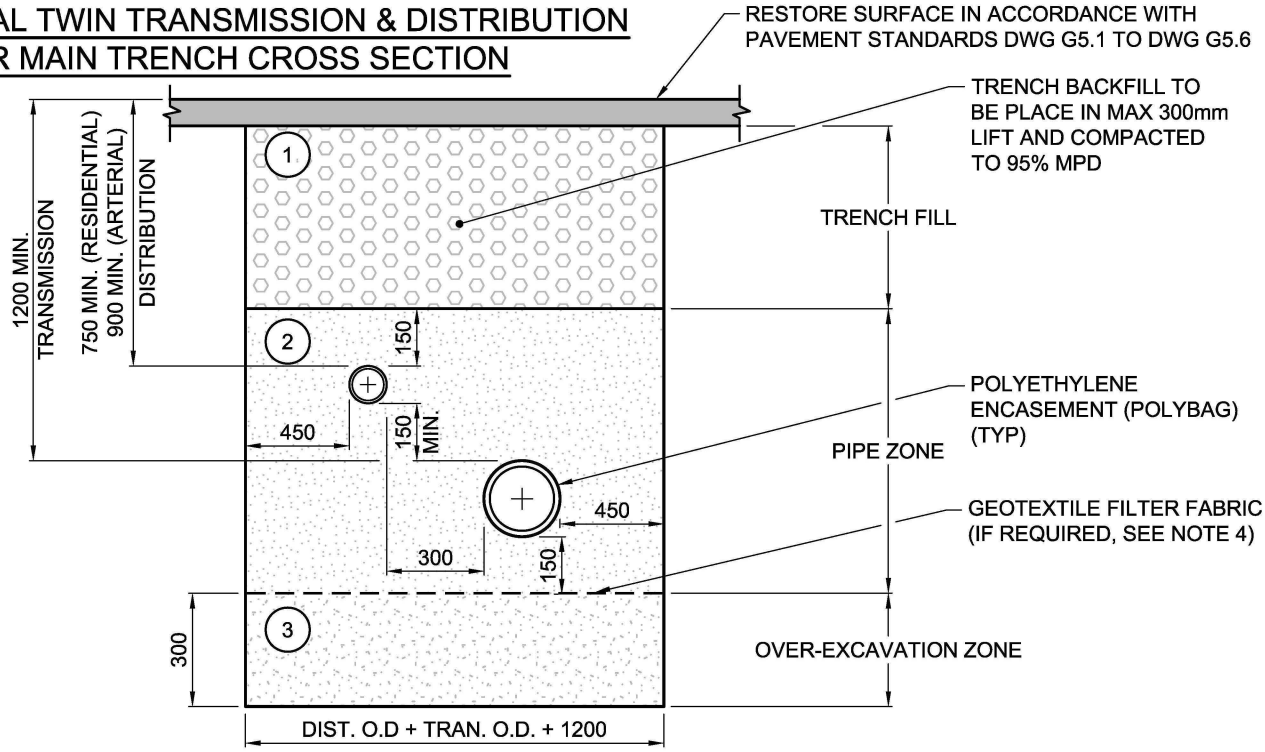

NOTES:

1. TRENCH FILL: APPROVED 19mm MINUS COMBINED CRUSHED AGGREGATE FILL (COV #9) COMPACTED TO 95% MODIFIED PROCTOR.
2. PIPE ZONE: APPROVED SAND FILL (COV #17) COMPACTED TO 95% MODIFIED PROCTOR.
3. OVER-EXCAVATION ZONE (IF REQUIRED): APPROVED 75mm MINUS CRUSHED TAILINGS (COV #13) COMPACTED TO 95% MODIFIED PROCTOR OR APPROVED 20mm CLEAR CRUSHED AGGREGATE (COV #15) IF GROUNDWATER IS A PROBLEM.
4. GEOTEXTILE FABRIC LAYER: PLACE ABOVE OVER-EXCAVATION ZONE ONLY IF SAND IS USED IN THE PIPE ZONE ABOVE DRAIN ROCK IN THE OVER-EXCAVATION ZONE. USE TYPE OF FABRIC AS SPECIFIED BY ENGINEER.
5. PROTRUDING ROCK, BOULDERS, LARGE STONES, FOREIGN MATERIAL AND SHORING MUST BE REMOVED TO MAINTAIN A MINIMUM CLEARANCE OF 150mm AROUND ALL PIPES, VALVES AND FITTINGS BEFORE COMPACTION.
6. ALL DIMENSIONS IN MILLIMETERS UNLESS STATED OTHERWISE.

SCALE: N.T.S.

REV.	REVISION DATE	APPROVED

TRENCHING
WATERWORKS TRANSMISSION TRENCH

ISSUE DATE: SEPTEMBER 2018
APPROVED BY: E. LIAO

CITY OF VANCOUVER

STANDARD DETAIL DRAWINGS

ENGINEERING SERVICES - VANCOUVER, B.C.

DRAWING No.

G4.4

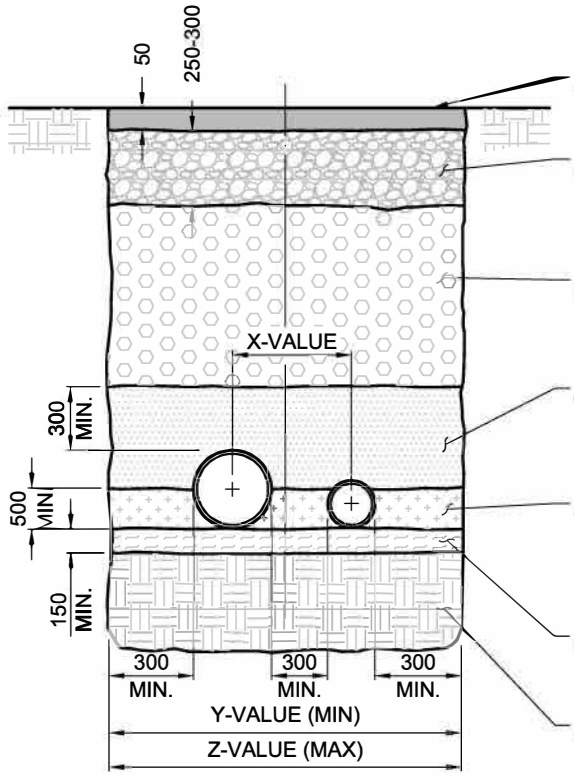

TEMPORARY PATCH

50mm TEMPORARY ASPHALT PATCH

GRANULAR BASE AND SUBBASE

MECHANICALLY COMPACTED APPROVED BASE AND SUBBASE TO 95% MODIFIED PROCTOR DENSITY.

GENERAL BACKFILL

MECHANICALLY COMPACTED APPROVED SAND OR EQUIVALENT BACKFILL MATERIAL TO 95% MODIFIED PROCTOR DENSITY.

INITIAL BACKFILL

HAND COMPACTED APPROVED SAND OR EQUIVALENT BACKFILL MATERIAL COMPACTED IN 150mm LIFTS TO 95% MODIFIED PROCTOR DENSITY.

HAUNCHING

HAND COMPACTED BACKFILL MATERIAL COMPACTED IN 150mm LIFTS TO 95% MODIFIED PROCTOR DENSITY:
APPROVED GRANULAR BASE (DRY ONLY)
APPROVED CLEAR CRUSH (UNDERWATER OR DRY)

PIPE BEDDING

MECHANICALLY COMPACTED MATERIAL (SAME AS HAUNCHING).

FOUNDATION

APPROVED GRANULAR SUBBASE TO 95% MODIFIED PROCTOR DENSITY (FOR OVEREXCAVATION).

STORM PIPE DIAMETER (mm)

SANITARY PIPE DIAMETER (mm)	200	250	300	375	450	525	600	675	750	900	1050	1200	1350	1500	1650	SANITARY PIPE DIAMETER (mm)
150	X 535 Y 1380 Z 1680	X 565 Y 1435 Z 1735	X 605 Y 1510 Z 1810	X 650 Y 1600 Z 1900												150
200	X 500 Y 1365 Z 1665	X 595 Y 1490 Z 1790	X 635 Y 1565 Z 1865	X 675 Y 1650 Z 1950	X 720 Y 1750 Z 2050	X 765 Y 1830 Z 2130	X 830 Y 1950 Z 2250	X 870 Y 2045 Z 2345	X 915 Y 2130 Z 2430	X 1000 Y 2300 Z 2600						200
250			X 660 Y 1630 Z 1930	X 710 Y 1720 Z 2020	X 750 Y 1800 Z 2100	X 800 Y 1890 Z 2190	X 860 Y 2015 Z 2315	X 905 Y 2105 Z 2405	X 945 Y 2190 Z 2490	X 1035 Y 2370 Z 2670						250
300			X 500 Y 1500 Z 1800	X 745 Y 1800 Z 2100	X 790 Y 1880 Z 2180	X 835 Y 1970 Z 2270	X 900 Y 2090 Z 2390	X 940 Y 2180 Z 2480	X 985 Y 2270 Z 2570	X 1070 Y 2440 Z 2740						300
375					X 835 Y 1970 Z 2270		X 940 Y 2180 Z 2480	X 985 Y 2270 Z 2570	X 1027 Y 2355 Z 2655	X 1115 Y 2530 Z 2830	X 1200 Y 2705 Z 3005	X 1290 Y 2880 Z 3180				375
450						X 922 Y 2145 Z 2445		X 1030 Y 2360 Z 2660	X 1072 Y 2444 Z 2744	X 1160 Y 2620 Z 2920	X 1250 Y 2800 Z 3100	X 1335 Y 2970 Z 3270	X 1425 Y 3150 Z 3450	X 1510 Y 3320 Z 3620		450
525								X 1070 Y 2445 Z 2745					X 1470 Y 3200 Z 3500	X 1555 Y 3410 Z 3710	X 1642 Y 3580 Z 3880	525
600													X 1529 Y 3358 Z 3658	X 1600 Y 3500 Z 3800		600

X =DISTANCE BETWEEN THE STORM AND SANITARY PIPES FROM CENTER (mm)
Y =MINIMUM WIDTH OF TRENCH (mm)
Z =MAXIMUM WIDTH OF TRENCH (mm)

NOTES:

1. SEE CONSTRUCTION SPECIFICATIONS FOR MORE DETAILS.
2. ONLY THE STORM PIPE MAY BE DEFLECTED OUT OF ALIGNMENT TO GIVE MAINTENANCE HOLE CONSTRUCTION CLEARANCES.
3. ALL BACKFILL MATERIALS CAN BE REPLACED WITH EQUIVALENT MATERIALS IF APPROVED BY THE CITY ENGINEER.
4. ALL DIMENSIONS IN MILLIMETERS UNLESS STATED OTHERWISE.

SCALE: N.T.S.

REV.	REVISION DATE	APPROVED

TRENCHING
TWIN SEWER TRENCH

ISSUE DATE: SEPTEMBER 2018

APPROVED BY: K. DER

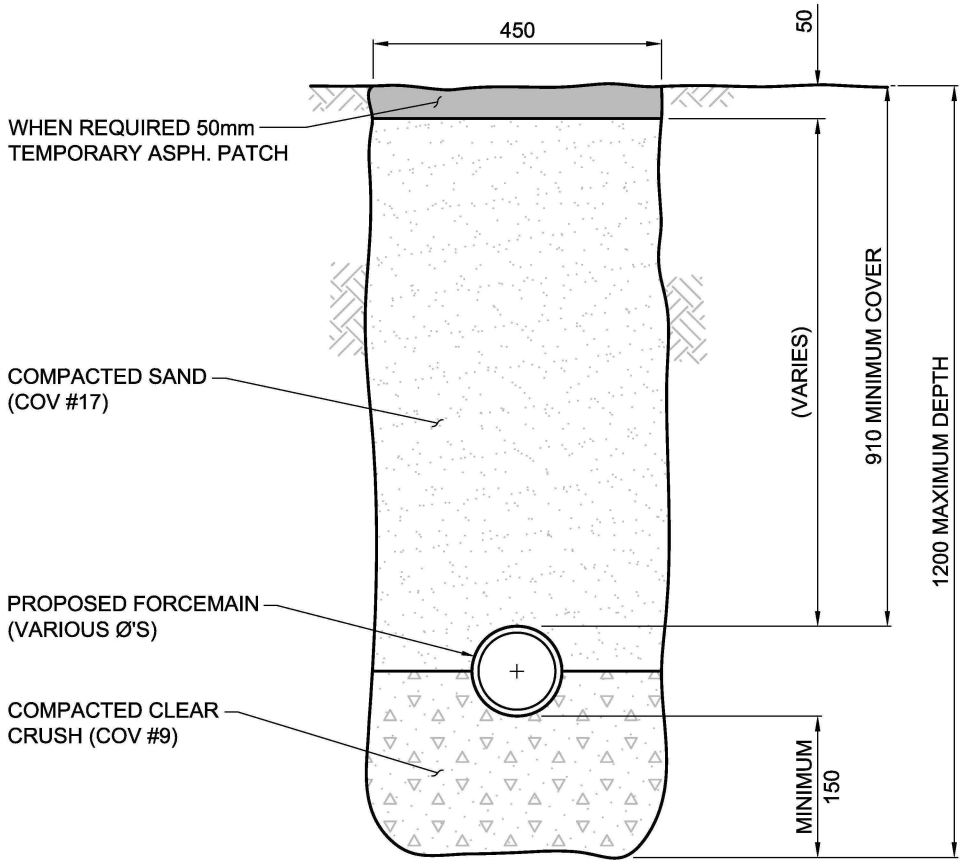

TYPICAL SEWER FORCEMAIN TRENCH CROSS SECTION

NOTES:

1. ALL BACKFILL MATERIALS CAN BE REPLACED WITH EQUIVALENT MATERIALS IF APPROVED BY THE CITY ENGINEER.
2. ALL DIMENSIONS IN MILLIMETERS UNLESS STATED OTHERWISE.

SCALE: N.T.S.

CITY OF VANCOUVER

STANDARD DETAIL DRAWINGS

ENGINEERING SERVICES - VANCOUVER, B.C.

DRAWING No. G4.6

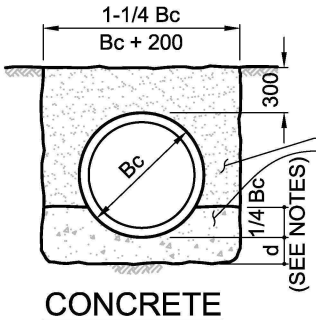

CONCRETE CRADLE

DENSELY COMPACTED BACKFILL

PLAIN OR REINFORCED CONCRETE 15 MPa

COMPACTED GRANULAR MATERIAL

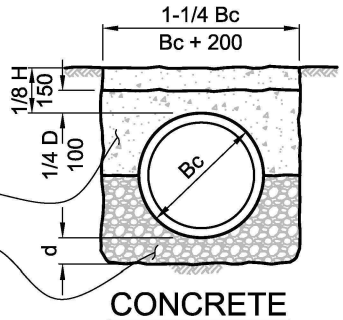

CONCRETE ARCH

CLASS A

REINFORCED As = 1.0% Bf = 4.8
REINFORCED As = 0.4% Bf = 3.4
PLAIN Bf = 2.8

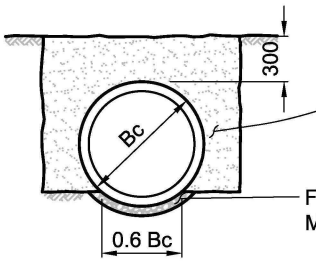

SHAPED SUBGRADE WITH GRANULAR FOUNDATION

DENSELY COMPACTED BACKFILL

COMPACTED GRANULAR MATERIAL

FINE GRANULAR FILL MATERIAL 50mm MIN.

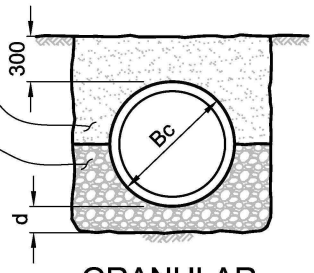

GRANULAR FOUNDATION

CLASS B

Bf = 1.9

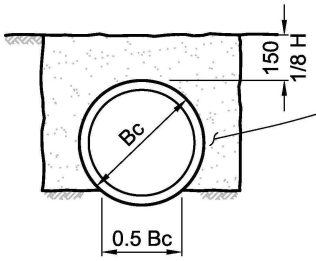

SHAPED SUBGRADE

LIGHTLY COMPACTED BACKFILL

COMPACTED GRANULAR MATERIAL OR DENSELY COMPACTED BACKFILL

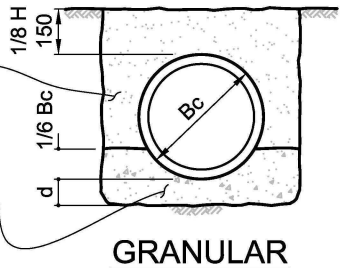

GRANULAR FOUNDATION

CLASS C

Bf = 1.5

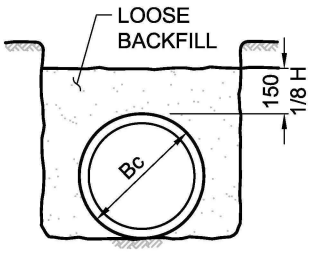

FLAT SUBGRADE

CLASS D

Bf = 1.1

DEPTH OF BEDDING MATERIAL BELOW PIPE

D	d (MIN.)
675 & SMALLER	75
750 TO 1500	100
1650 & LARGER	150

LEGEND

Bc = OUTSIDE DIAMETER
D = INSIDE DIAMETER
M = BACKFILL COVER ABOVE TOP OF PIPE
d = DEPTH OF BEDDING MATERIAL BELOW PIPE
As = AREA OF TRANSVERSE STEEL IN THE CRADLE OF ARCH EXPRESSED AS A PERCENTAGE OF AREA OF CONCRETE AT INVERT OR CROWN

NOTES:

1. FOR CLASS A BEDDINGS, USE d AS DEPTH OF CONCRETE BELOW PIPE UNLESS OTHERWISE INDICATED BY SOIL OR DESIGN CONDITIONS.
2. FOR CLASS B AND C BEDDINGS, SUBGRADES SHOULD BE EXCAVATED OR OVER EXCAVATED, IF NECESSARY, SO A UNIFORM FOUNDATION FREE OF PROTRUDING ROCKS MAY BE PROVIDED.
3. SPECIAL CARE MAY BE NECESSARY WITH CLASS A, OR OTHER UNYIELDING FOUNDATIONS TO CUSHION PIPE FROM SHOCK WHEN BLASTING CAN BE ANTICIPATED IN THE AREA.
4. ALL DIMENSIONS IN MILLIMETERS UNLESS STATED OTHERWISE.

SCALE: N.T.S.

REV.	REVISION DATE	APPROVED

TRENCHING

RIGID CIRCULAR SEWER PIPE BEDDINGS

ISSUE DATE: SEPTEMBER 2018

APPROVED BY: K. DER

CITY OF VANCOUVER

STANDARD DETAIL DRAWINGS

ENGINEERING SERVICES - VANCOUVER, B.C.

DRAWING No. G4.7

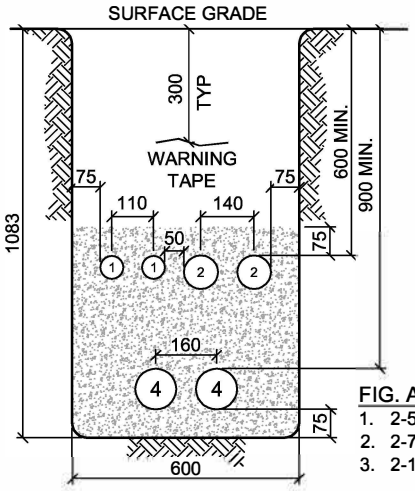

FIG. A1
1. 2-53mm RPVC
2. 2-78mm RPVC
3. 2-103mm DB2 (ORANGE)

OR

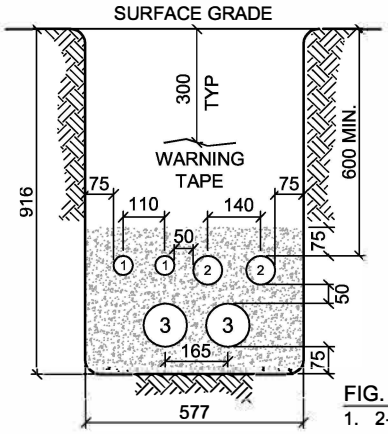

FIG. A2
1. 2-53mm RPVC
2. 2-78mm RPVC
3. 2-103mm RPVC (ORANGE)

HIGH-DENSITY CONFIGURATIONS
(APPLICABLE TO BOTH SIDES OF THE ROAD IN ARTERIALS, MAJOR ROADS & DOWNTOWN)

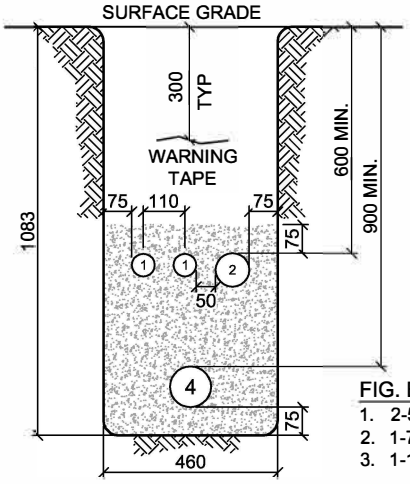

FIG. B1
1. 2-53mm RPVC
2. 1-78mm RPVC
3. 1-103mm DB2 (ORANGE)

OR

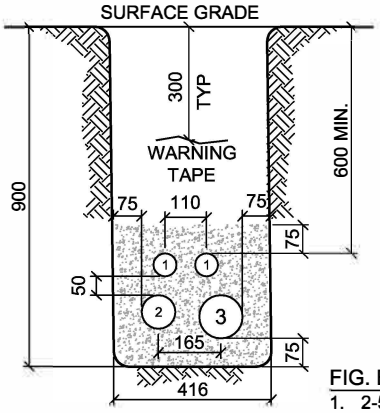

FIG. B2
1. 2-53mm RPVC
2. 1-78mm RPVC
3. 1-103mm RPVC (ORANGE)

LOW-DENSITY DUCT BANK
(APPLICABLE TO BOTH SIDES OF THE ROAD IN RESIDENTIAL AREAS, LOCAL ROADS, COLLECTORS & BACK LANES)

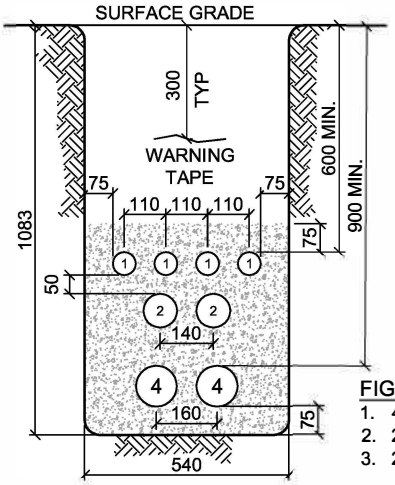

FIG. C1
1. 4-53mm RPVC
2. 2-78mm RPVC
3. 2-103mm DB2 (ORANGE)

OR

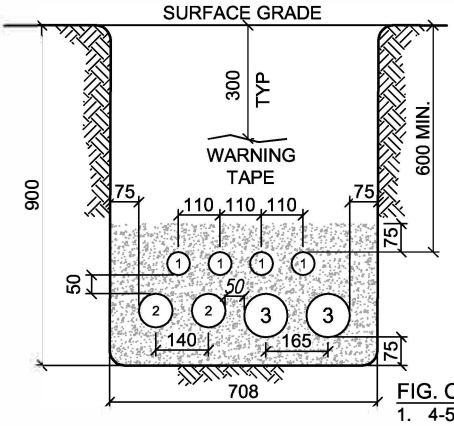

FIG. C2
1. 4-53mm RPVC
2. 2-78mm RPVC
3. 2-103mm RPVC (ORANGE)

DUCT CONFIGURATION
(APPLICABLE TO DOWNTOWN BACK LANES - H-FRAME PROJECT)

- SAND OR SCREENED DIRT

SCALE: N.T.S.

REV.	REVISION DATE	APPROVED
1	SEP 2019	D. EPA

TRENCHING
DEVELOPMENT SITES DUCT TRENCH

ISSUE DATE: SEPTEMBER 2019
APPROVED BY: D. EPA

PATH: H:\TEMP\megan.pate\for joycelcovstandardsdetaildrawings\CCV STANDARD GENERAL DETAILS.dwg

CITY OF VANCOUVER	STANDARD DETAIL DRAWINGS ENGINEERING SERVICES - VANCOUVER, B.C.	DRAWING No. G5.1

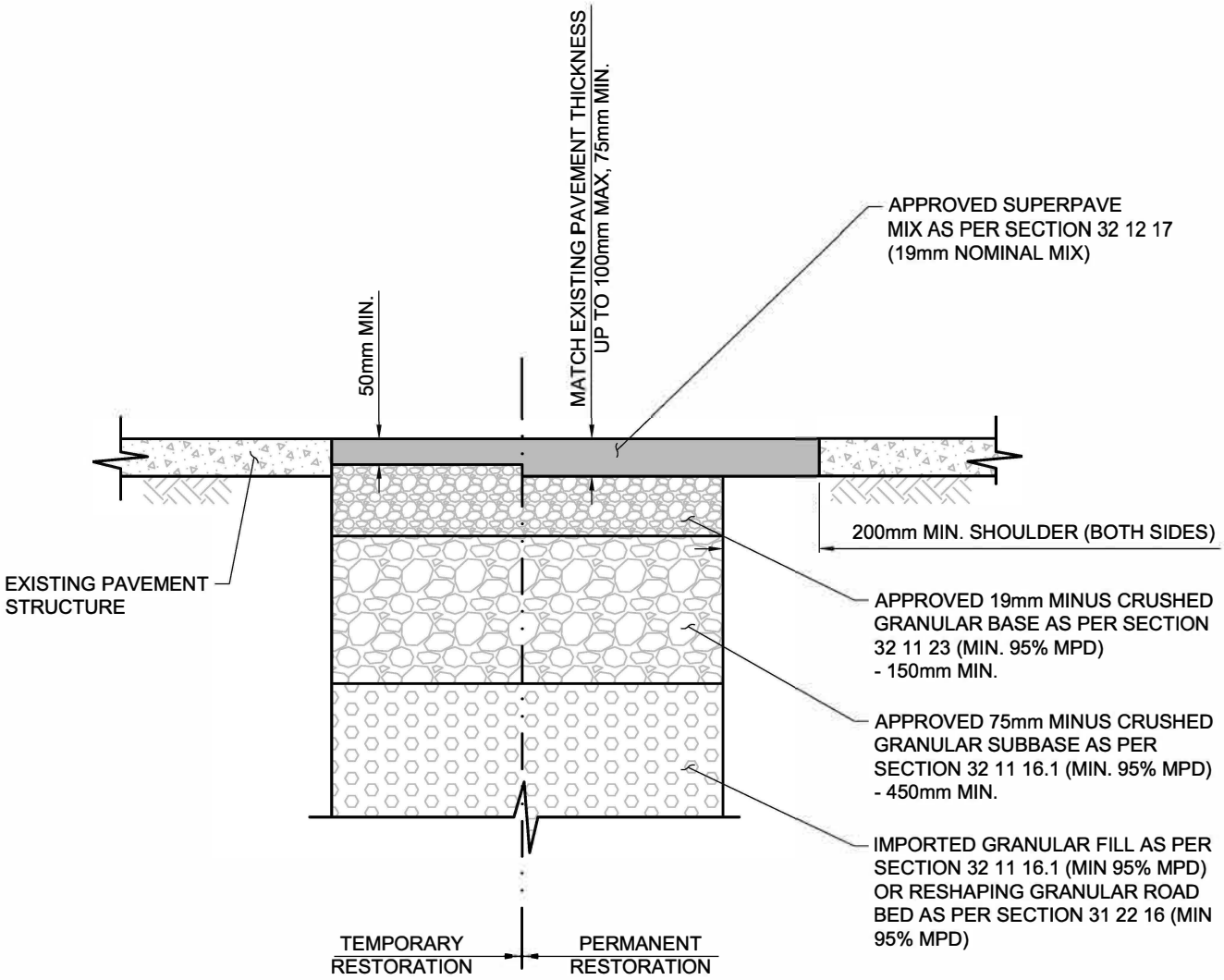

NOTES:

1. FOR REQUIRED WIDTHS OF SURFACE RESTORATION, RELATIVE TO ORIGINAL TRENCH WIDTH FOR LONGITUDINAL CUTS, REFER TO CONSTRUCTION SPECIFICATIONS SECTION 32 15 01S.
2. THIS DRAWING IS FOR RESTORATION OF CUTS IN ASPHALTIC CONCRETE PAVEMENTS.

SCALE: N.T.S.

REV.	REVISION DATE	APPROVED

SURFACE RESTORATION
RESIDENTIAL (LIGHT DUTY) - STREETS/LANES

ISSUE DATE: SEPTEMBER 2018
APPROVED BY: J.LEE

CITY OF VANCOUVER	STANDARD DETAIL DRAWINGS ENGINEERING SERVICES - VANCOUVER, B.C.	DRAWING No. G5.2

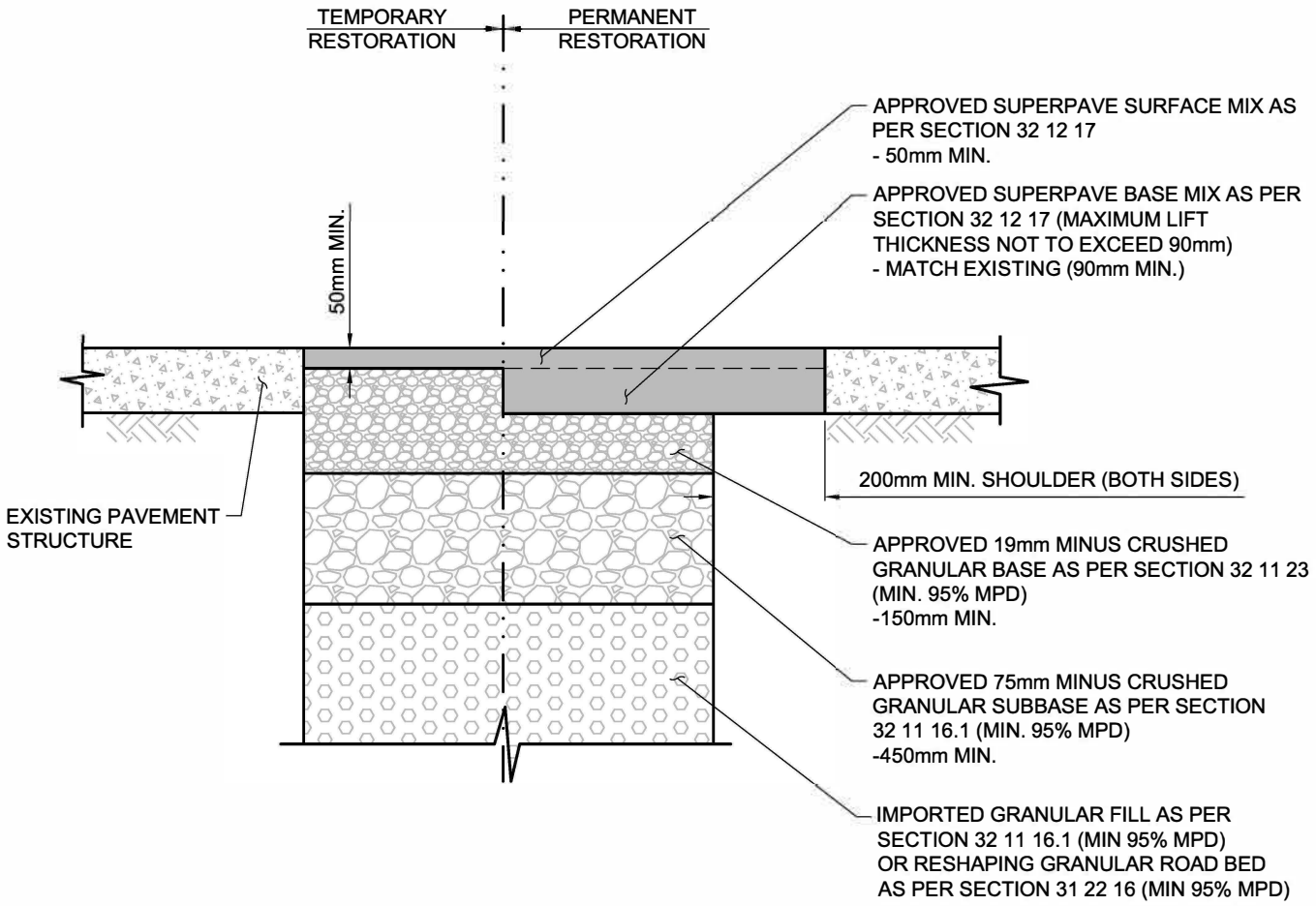

NOTES:

1. FOR REQUIRED WIDTHS OF SURFACE RESTORATION, RELATIVE TO ORIGINAL TRENCH WIDTH FOR LONGITUDINAL CUTS, REFER TO CONSTRUCTION SPECIFICATIONS SECTION 32 15 01S.
2. REFER TO SECTION 32 15 01S FOR DEFINITION OF HIGHER ZONED ROUTES.
3. THIS DRAWING IS FOR RESTORATION OF CUTS IN ASPHALTIC CONCRETE PAVEMENTS.

SCALE: N.T.S.

REV.	REVISION DATE	APPROVED

SURFACE RESTORATION
HIGHER-ZONED - STREETS/LANES

ISSUE DATE: SEPTEMBER 2018
APPROVED BY: J.LEE

CITY OF VANCOUVER	STANDARD DETAIL DRAWINGS ENGINEERING SERVICES - VANCOUVER, B.C.	DRAWING No. G5.3

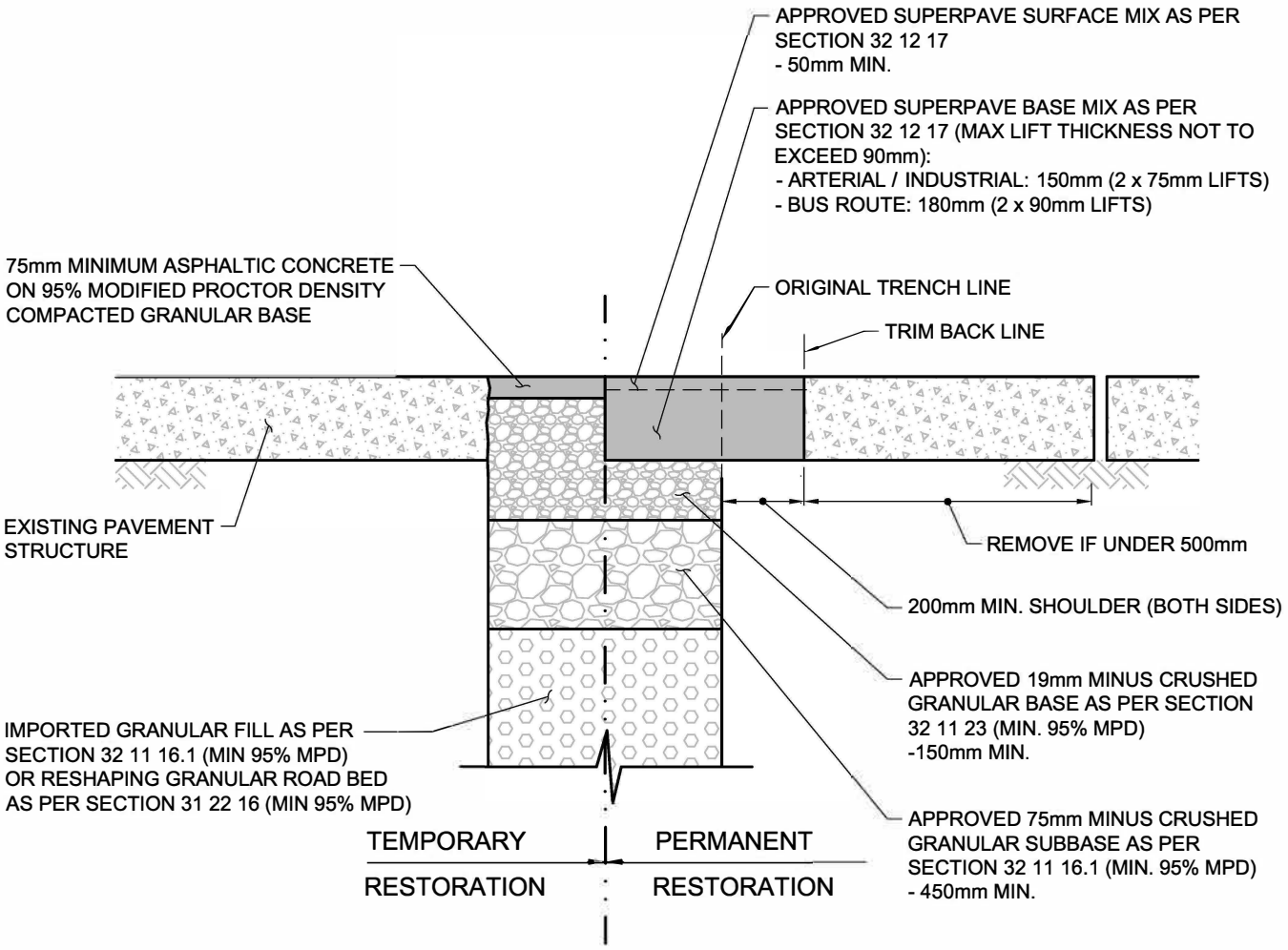

NOTES:

1. G5.3 SPECIFICATION TO BE USED ONLY UPON THE APPROVAL OF THE CITY ENGINEER. G5.4 IS THE PREFERRED SPECIFICATION TO BE USED FOR THE SURFACE RESTORATION OF INDUSTRIAL, ARTERIAL AND BUS ROUTES.
2. FOR REQUIRED WIDTHS OF SURFACE RESTORATION, RELATIVE TO ORIGINAL TRENCH WIDTH FOR LONGITUDINAL CUTS, REFER TO SECTION 32 15 01S.
3. ALTERNATIVE PAVEMENT STRUCTURES MAY BE CONSIDERED, UPON APPROVAL OF THE CITY ENGINEER.
4. THIS DRAWING IS FOR RESTORATION OF CUTS IN ASPHALTIC CONCRETE PAVEMENTS.

SCALE: N.T.S.

REV.	REVISION DATE	APPROVED
1	2019-03-13	J. LEE

SURFACE RESTORATION
INDUSTRIAL, ARTERIAL, & BUS ROUTES

ISSUE DATE: MARCH 2019
APPROVED BY: J. LEE

CITY OF VANCOUVER	STANDARD DETAIL DRAWINGS ENGINEERING SERVICES - VANCOUVER, B.C.	DRAWING No. G5.4

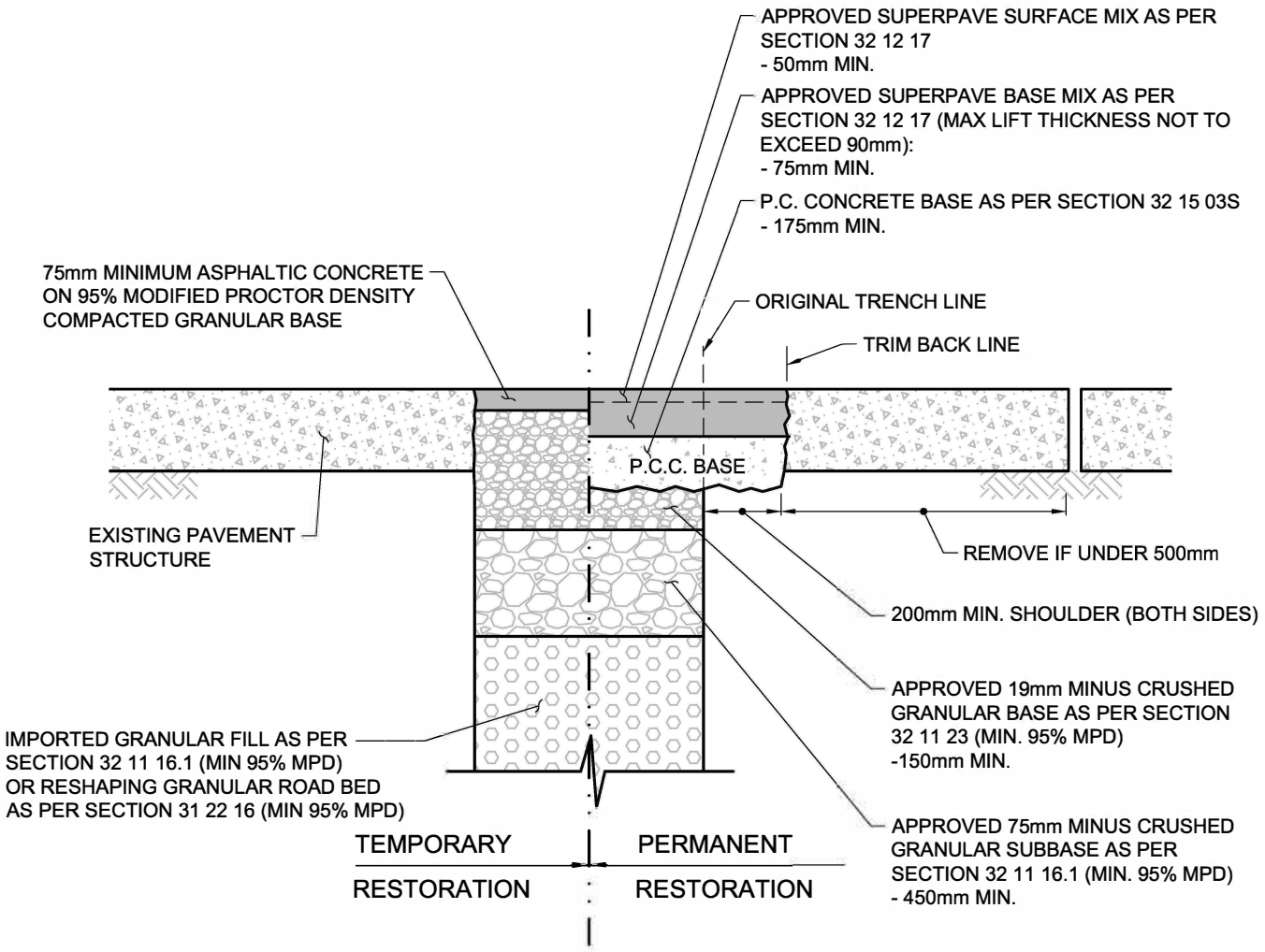

NOTES:

1. G5.4 IS THE PREFERRED SPECIFICATION TO BE USED FOR THE SURFACE RESTORATION OF INDUSTRIAL, ARTERIAL AND BUS ROUTES.
2. FOR REQUIRED WIDTHS OF SURFACE RESTORATION, RELATIVE TO ORIGINAL TRENCH WIDTH FOR LONGITUDINAL CUTS, REFER TO SECTION 32 15 01S.
3. ALTERNATIVE PAVEMENT STRUCTURES MAY BE CONSIDERED, UPON APPROVAL OF THE CITY ENGINEER.

SCALE: N.T.S.

REV.	REVISION DATE	APPROVED
1	2019-03-13	J. LEE

SURFACE RESTORATION, P.C.C. BASE
INDUSTRIAL, ARTERIAL & BUS ROUTES

ISSUE DATE: MARCH 2019
APPROVED BY: J. LEE

CITY OF VANCOUVER

STANDARD DETAIL DRAWINGS

ENGINEERING SERVICES - VANCOUVER, B.C.

DRAWING No.

G5.5

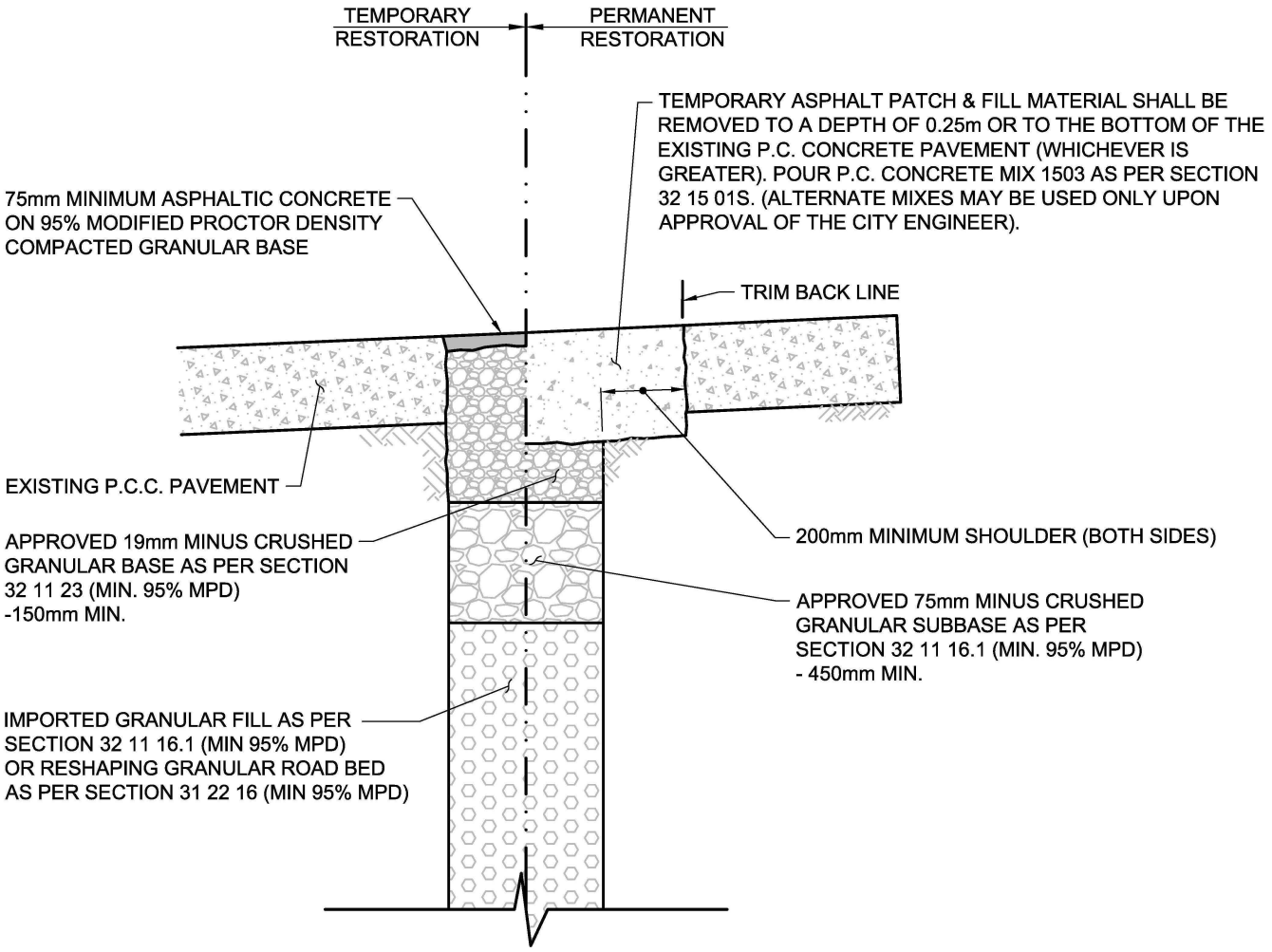

NOTES:

1. SURFACE FINISH AND EXPANSION/CONTROL JOINTS TO CONFORM WITH SURFACE FINISH/JOINTS IN EXISTING SURFACE.
2. FOR REQUIRED WIDTHS OF SURFACE RESTORATION, RELATIVE TO ORIGINAL TRENCH WIDTH FOR LONGITUDINAL CUTS, REFER TO SECTION 32 15 01S.
3. THIS DRAWING IS FOR RESTORATION OF CUTS IN PORTLAND CEMENT CONCRETE PAVEMENTS.

SCALE: N.T.S.

REV.	REVISION DATE	APPROVED

SURFACE RESTORATION
PORTLAND CEMENT CONCRETE

ISSUE DATE: SEPTEMBER 2018

APPROVED BY: J. LEE

CITY OF VANCOUVER	STANDARD DETAIL DRAWINGS ENGINEERING SERVICES - VANCOUVER, B.C.	DRAWING No. G5.6

PRIOR TO ASPHALT PLACEMENT, THE EDGES MUST BE "PAINTED" (TACKED) WITH EITHER 85-100 ASPHALTIC CEMENT, OR A SUITABLE COATING OF ASPHALT EMULSION TO ENSURE A SEAMLESS BOND IN THE CROSS-HATCHED AREAS IN THE DIAGRAM BELOW, ALONG THE SURFACE FOR A MINIMUM OF 125mm (ALL INSTANCES), AS WELL AS ON THE UPPER SIDE-WALLS OF THE CUT AS SHOWN IN THE PICTURE BELOW.

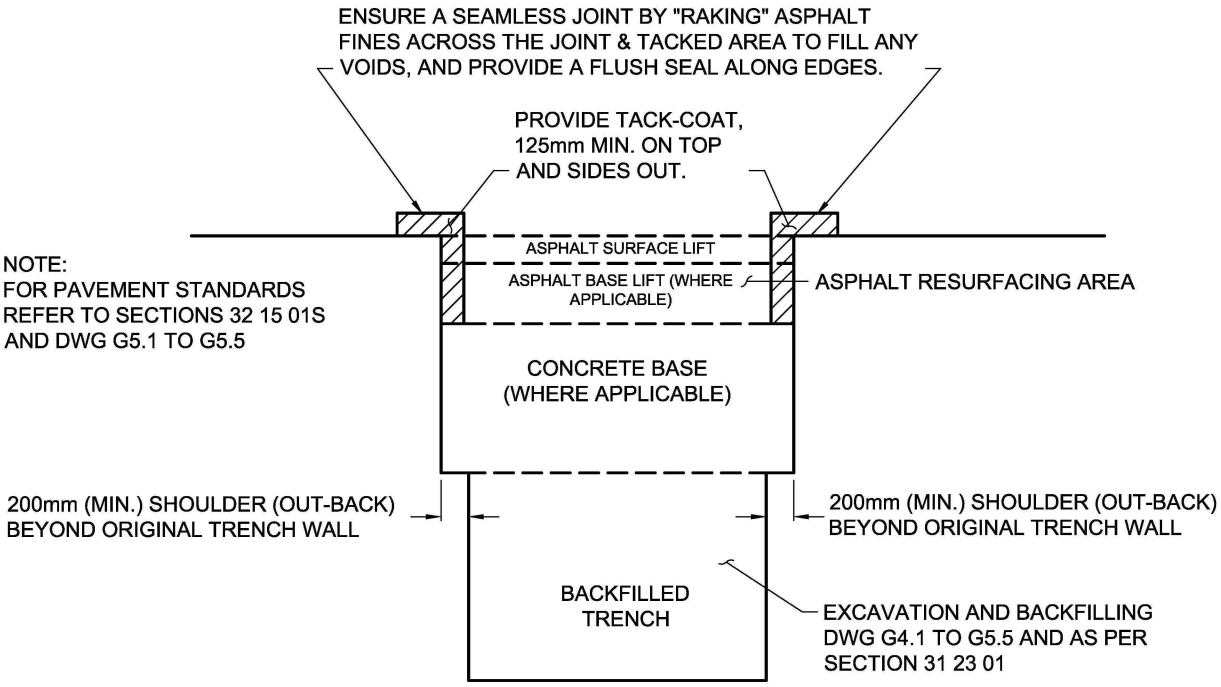

ACCEPTABLE SEALED EDGE OF CUT REPAIR*

UNACCEPTABLE SEALED EDGE OF CUT REPAIR*

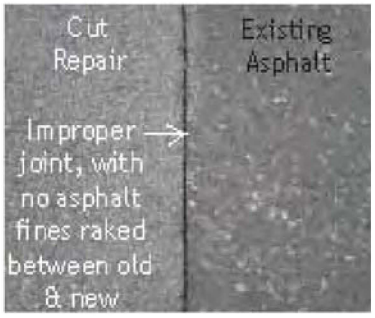

*THIS SAME TREATMENT OF EDGES APPLIES TO ALL SITUATIONS (i.e. ASPHALT APRONS IN LANES) WHERE NEW ASPHALT IS PLACED ADJACENT TO EXISTING ASPHALT.

SCALE: N.T.S.

REV.	REVISION DATE	APPROVED

SURFACE RESTORATION
CUT REPAIR EDGE TREATMENT

ISSUE DATE: SEPTEMBER 2018
APPROVED BY: J. LEE

CITY OF VANCOUVER	STANDARD DETAIL DRAWINGS ENGINEERING SERVICES - VANCOUVER, B.C.	DRAWING No. G5.7

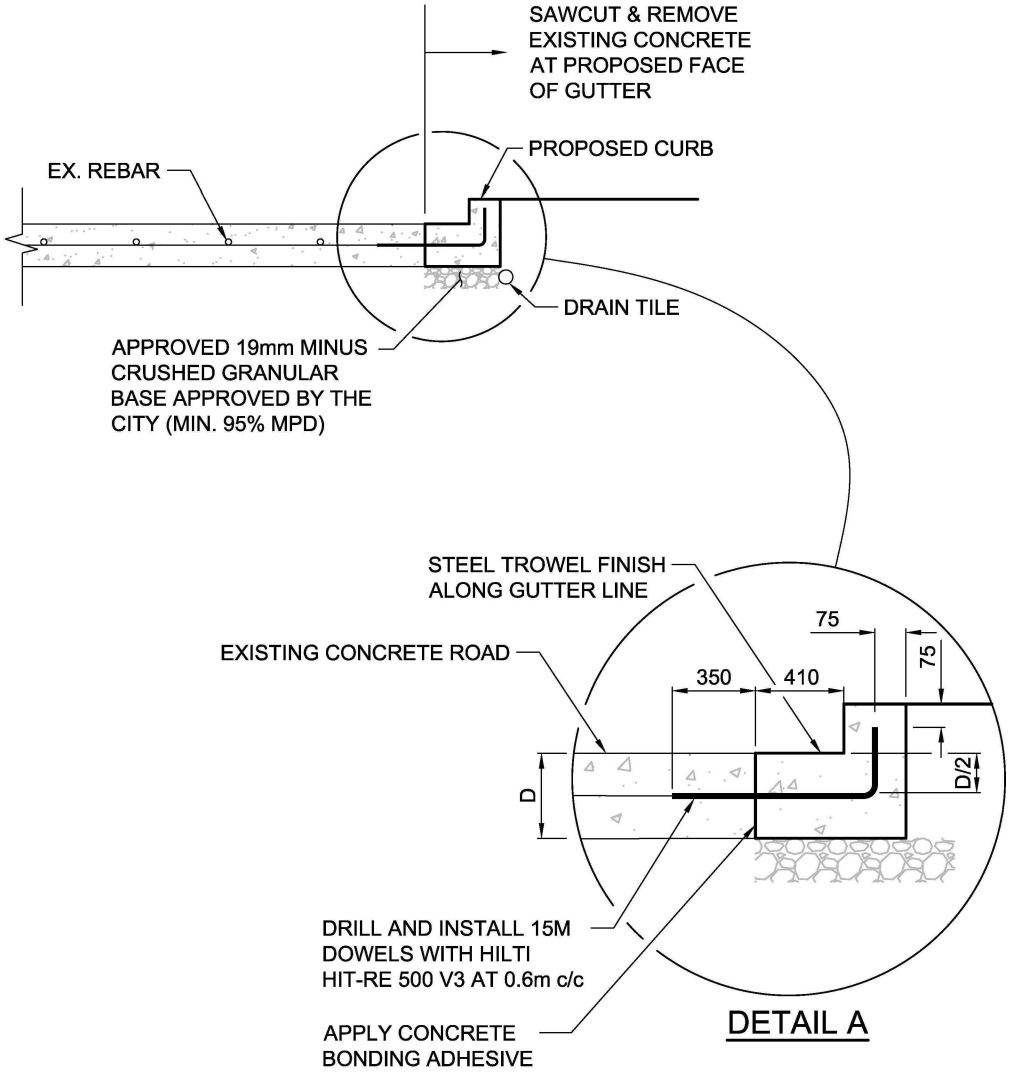

NOTES:

1. INTERNAL VIBRATOR OR POWER SCREED SHALL BE USED WHEREVER PRACTICABLE TO CONSOLIDATE THE CONCRETE. ANY OTHER CONSOLIDATION METHODS MUST BE APPROVED BY THE CITY ENGINEER PRIOR TO THE CONCRETE POUR.
2. CONCRETE MIX:
   - A) CITY MIX NO. 1503 OR EQUIVALENT MIX APPROVED BY THE CITY CAN BE USED AS LONG AS NO TRAFFIC OR WEIGHT LOAD IS PUT ON THE BUS SLAB FOR 3 DAYS AFTER POUR.
   - B) CITY MIX NO. 20MPa IN 24 HRS OR EQUIVALENT MIX APPROVED BY THE CITY CAN BE USED AS LONG AS NO TRAFFIC OR WEIGHT LOAD IS PUT ON THE BUS SLAB FOR 24 HOURS AFTER POUR.
   - C) NO CHLORIDE BASED ADDITIVES SHALL BE USED IN CONCRETE SLAB WITH EMBEDDED STEEL.
3. PLACE CONTROL JOINTS IN CURB & GUTTER TO MATCH EX. ROAD CONTROL JOINTS.
4. USE 15mm REBAR WITH MINIMUM 75mm COVER.
5. ALL DIMENSIONS IN MILLIMETERS UNLESS STATED OTHERWISE.

SCALE: N.T.S.

REV.	REVISION DATE	APPROVED	SURFACE RESTORATION REHABILITATION OF MONOLITHIC CURB	ISSUE DATE: SEPTEMBER 2018 APPROVED BY: J. LEE

CITY OF VANCOUVER	STANDARD DETAIL DRAWINGS ENGINEERING SERVICES - VANCOUVER, B.C.	DRAWING No. G6.1

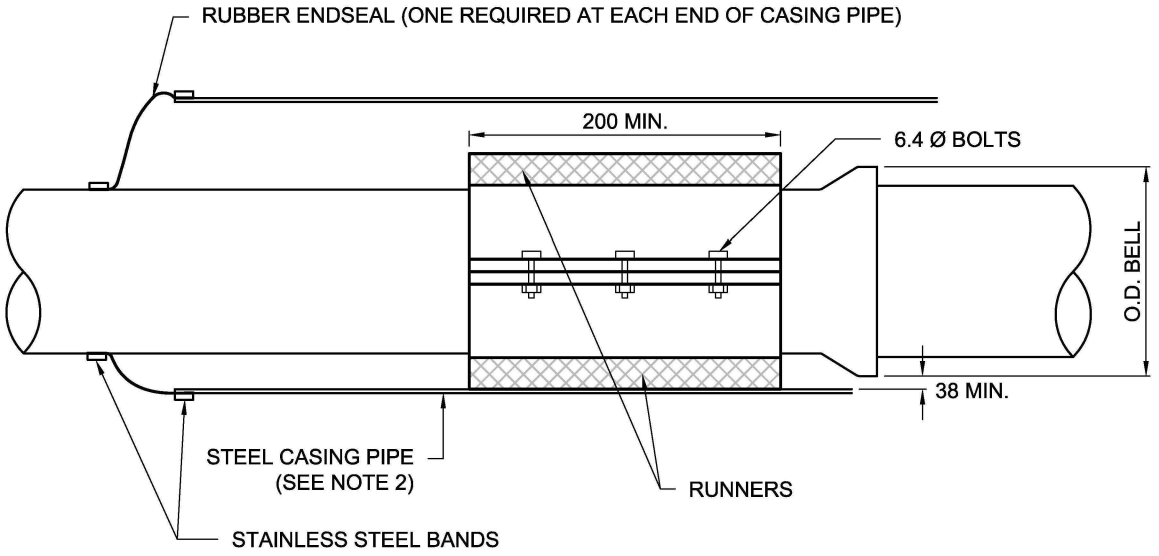

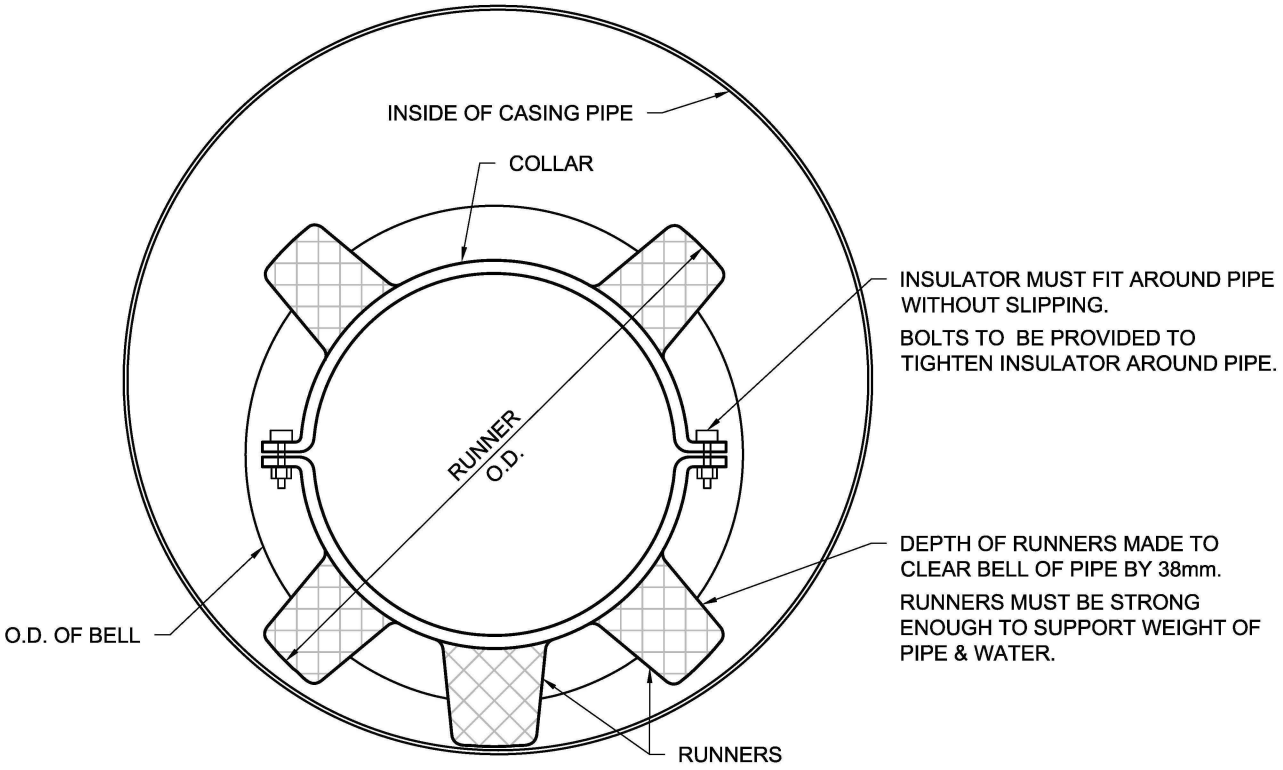

NOTE:

1. ALL DIMENSIONS IN MILLIMETERS UNLESS STATED OTHERWISE.
2. STEEL CASING PIPE MINIMUM YIELD STRENGTH, SMYS AT 35,000psi (241MPa).

SCALE: N.T.S.

REV.	REVISION DATE	APPROVED

UTILITIES
CASING PIPE DETAILS

ISSUE DATE: SEPTEMBER 2018
APPROVED BY: E. LIAO

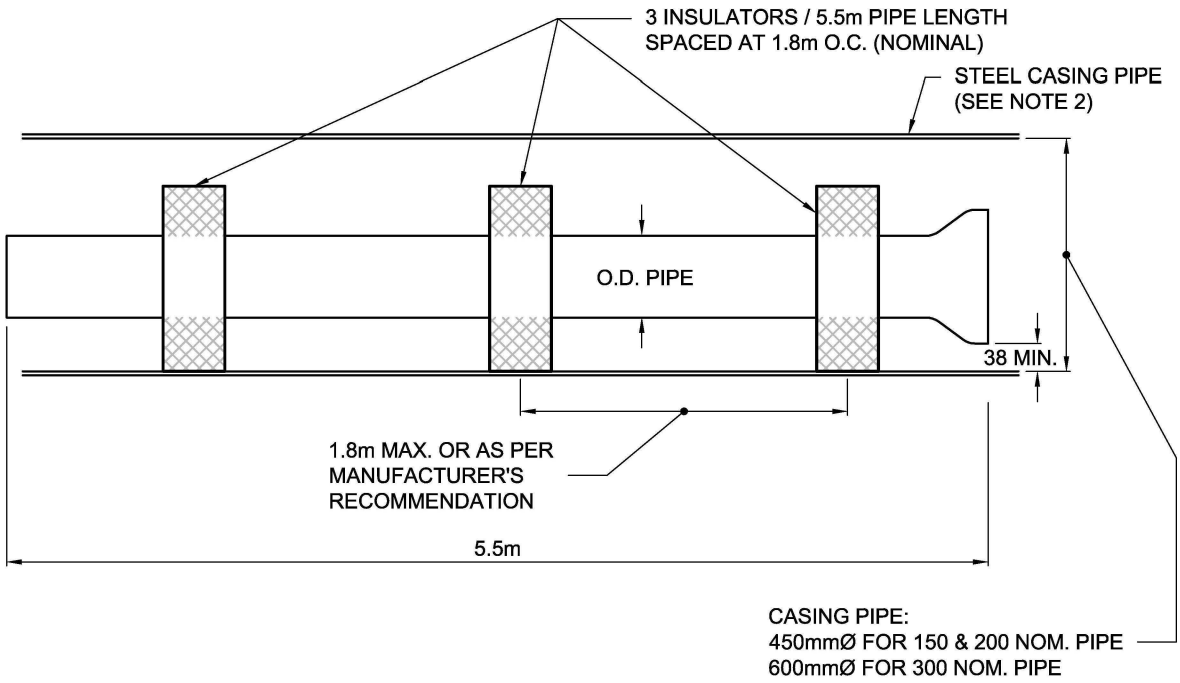

NOM. PIPE SIZE (mm)	O.D. OF PIPE (mm)	O.D. OF BELL (mm)	MIN. O.D. OF RUNNERS (mm)
150	175	241	317
200	230	305	381
300	335	415	491

NOTE:

1. ALL DIMENSIONS IN MILLIMETERS UNLESS STATED OTHERWISE.
2. STEEL CASING PIPE MINIMUM YIELD STRENGTH, SMYS AT 35,000psi (241MPa).

SCALE: N.T.S.

CITY OF VANCOUVER	STANDARD DETAIL DRAWINGS ENGINEERING SERVICES - VANCOUVER, B.C.	DRAWING No. G9.1

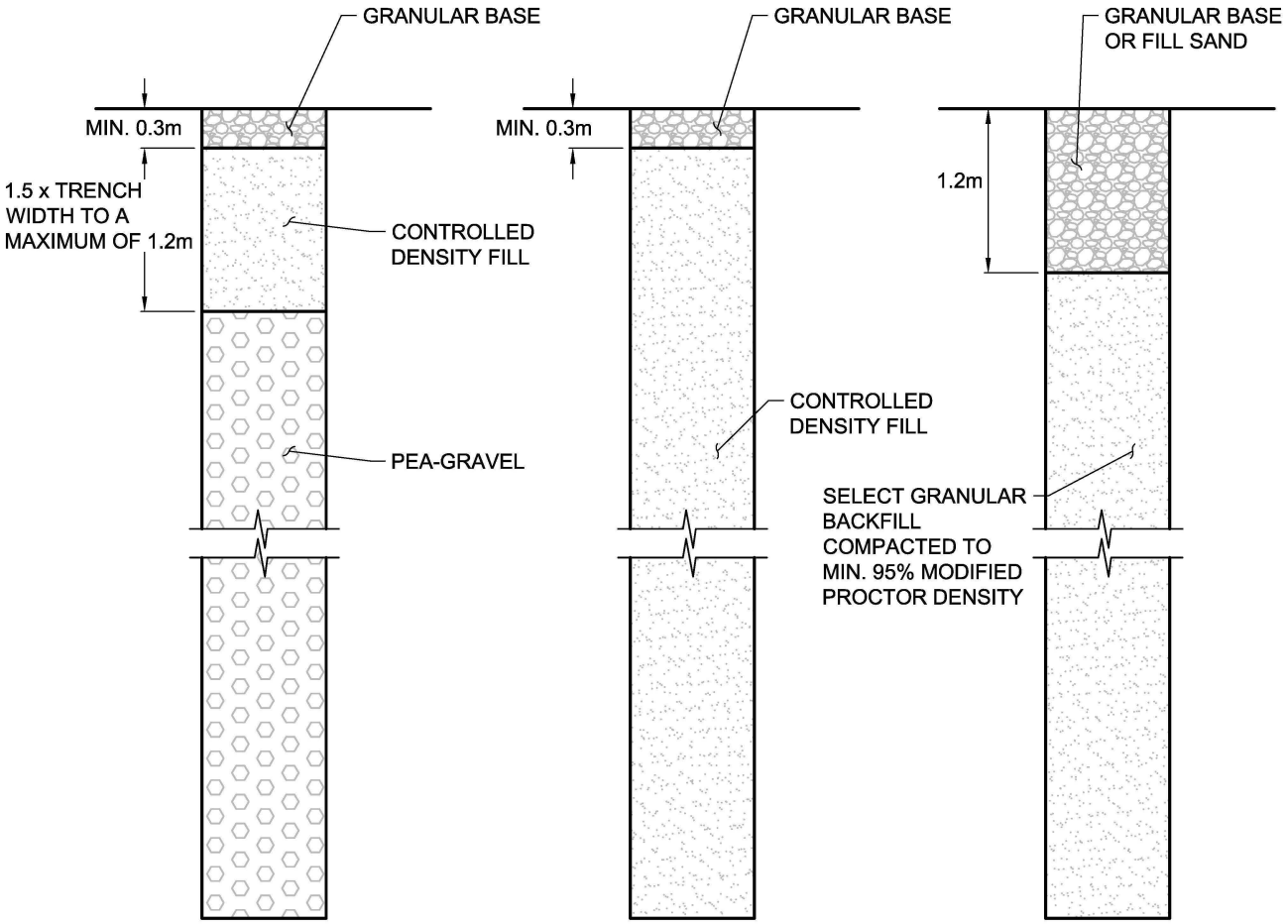

OPTION 1 OPTION 2 OPTION 3

NOTE:

1. WHEN PEA-GRAVEL IS TO BE USED AS BACKFILL MATERIAL, THE CONTRACTOR SHALL ENSURE THAT THE PEA-GRAVEL WILL REMAINE CONFINED TO ITS ORIGINAL AREA OF PLACEMENT, SHOULD SUBSEQUENT WORK BE UNDERTAKEN ON ANY ADJACENT SITES. THE PROPOSED METHOD OF PROVIDING SUCH CONFINEMENT SHALL BE SUBMITTED TO THE PROJECTS DEVELOPMENT SERVICES BRANCH OF THE CITY ENGINEERING SERVICES DEPARTMENT FOR REVIEW PRIOR TO THE COMMENCEMENT OF BACKFILL OPERATIONS.

SCALE: N.T.S.

REV.	REVISION DATE	APPROVED	BACKFILL BUILDING SITE BACKFILL	ISSUE DATE: SEPTEMBER 2018 APPROVED BY: J. LEE

CITY OF VANCOUVER	STANDARD DETAIL DRAWINGS ENGINEERING SERVICES - VANCOUVER, B.C.	DRAWING No. G9.2

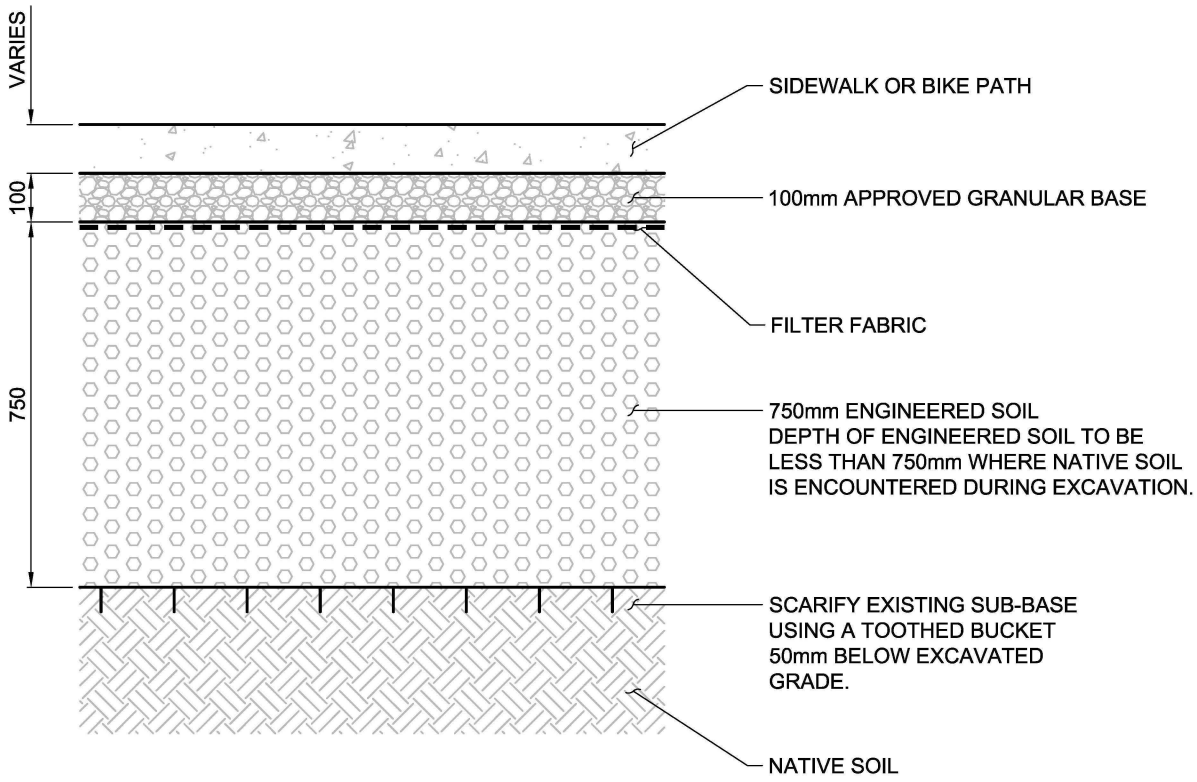

NOTE:

1. ALL DIMENSIONS IN MILLIMETERS UNLESS STATED OTHERWISE.

SCALE: N.T.S.

REV.	REVISION DATE	APPROVED

BACKFILL

ENGINEERED SOIL BACKFILL

ISSUE DATE: SEPTEMBER 2018

APPROVED BY: J. LEE

CITY OF VANCOUVER	STANDARD DETAIL DRAWINGS ENGINEERING SERVICES - VANCOUVER, B.C.	DRAWING No. G10.1

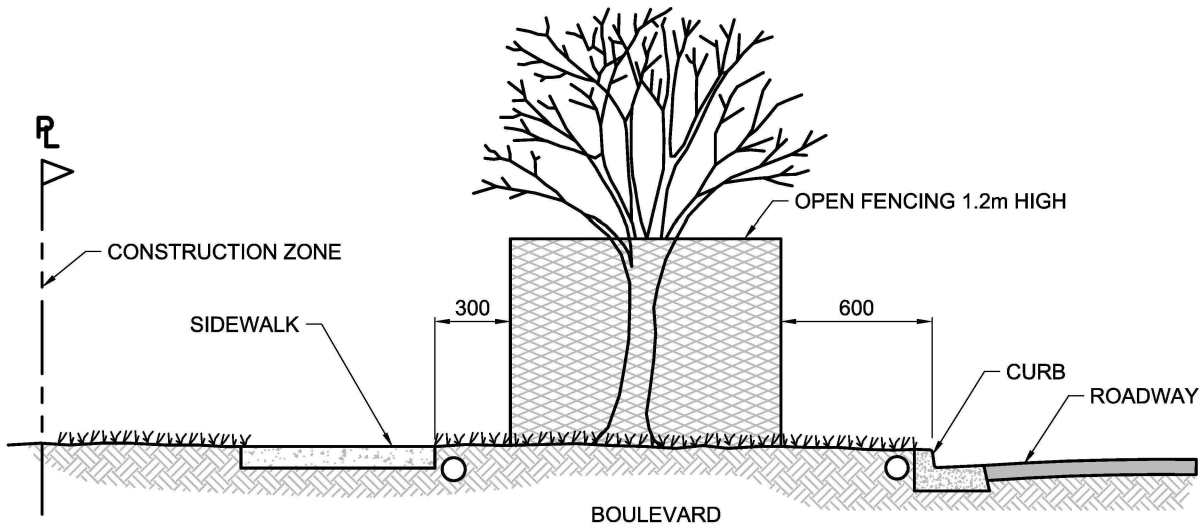

SECTION A-A

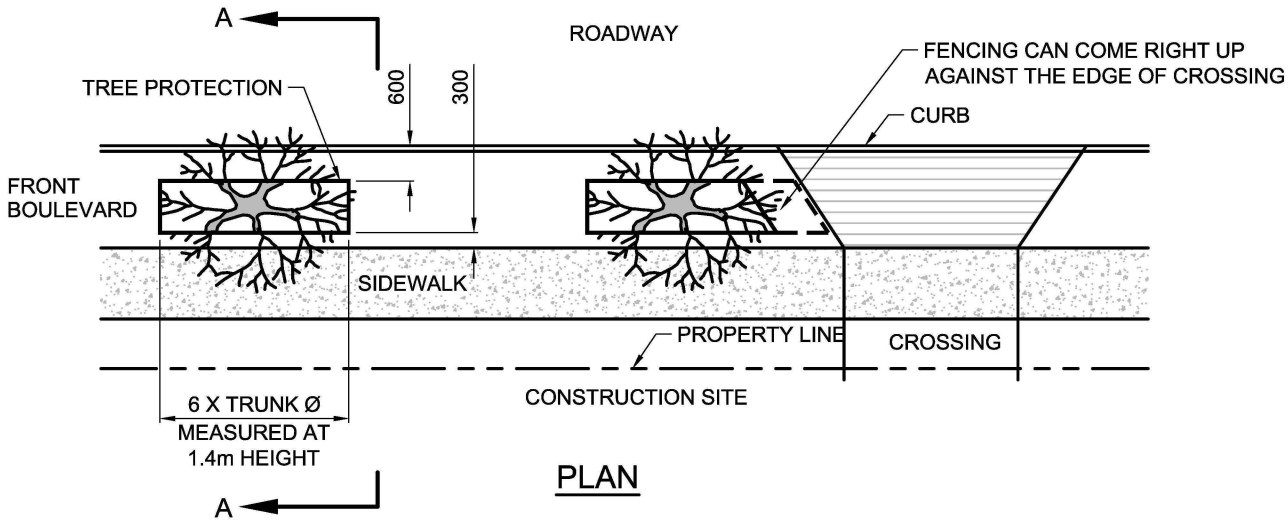

PLAN

NOTES:

1. TREE PROTECTION FENCING TO BE INSTALLED AND MAINTAINED IN ACCORDANCE WITH BYLAW 9958. THIS DRAWING IS INTENDED TO ACT AS A SUPPLEMENTARY PLAN ONLY.
2. ALL DIMENSIONS IN MILLIMETERS UNLESS STATED OTHERWISE.

SCALE: N.T.S.

REV.	REVISION DATE	APPROVED

TREES

PROTECTION OF BOULEVARD TREES ADJACENT TO CONSTRUCTION SITES

ISSUE DATE: SEPTEMBER 2018

APPROVED BY: J. LEE

CITY OF VANCOUVER

STANDARD DETAIL DRAWINGS

ENGINEERING SERVICES - VANCOUVER, B.C.

DRAWING No.

G10.2

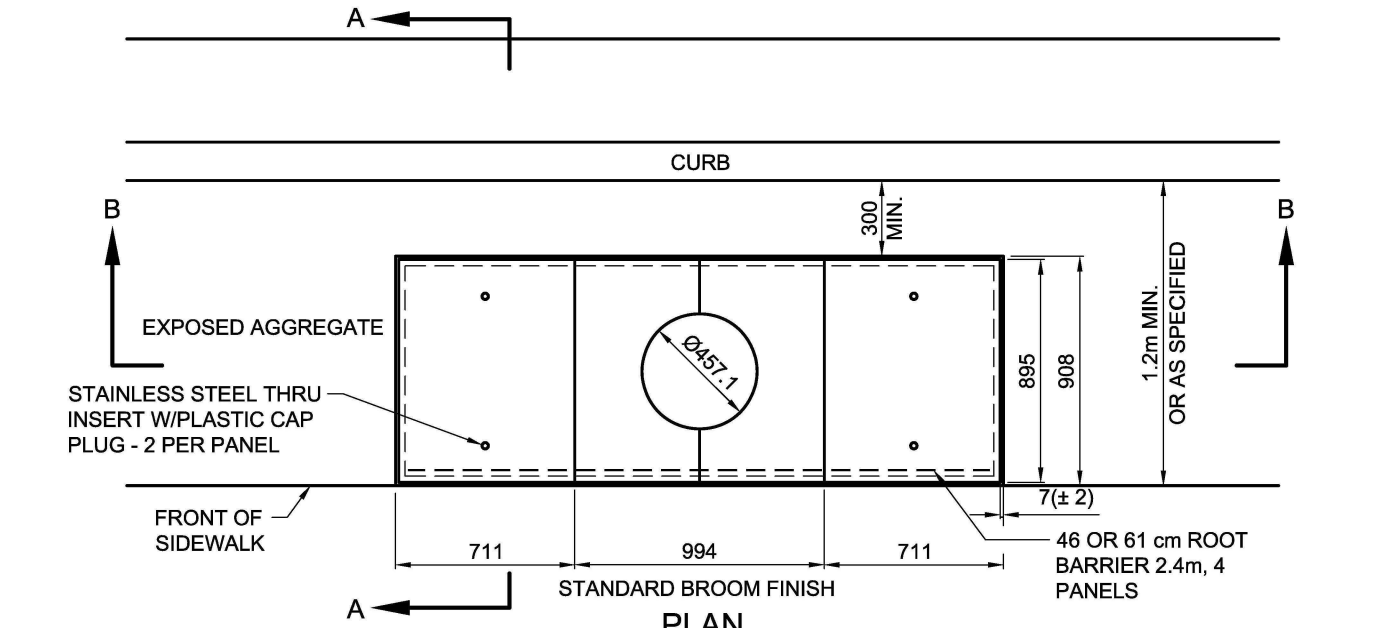

PLAN

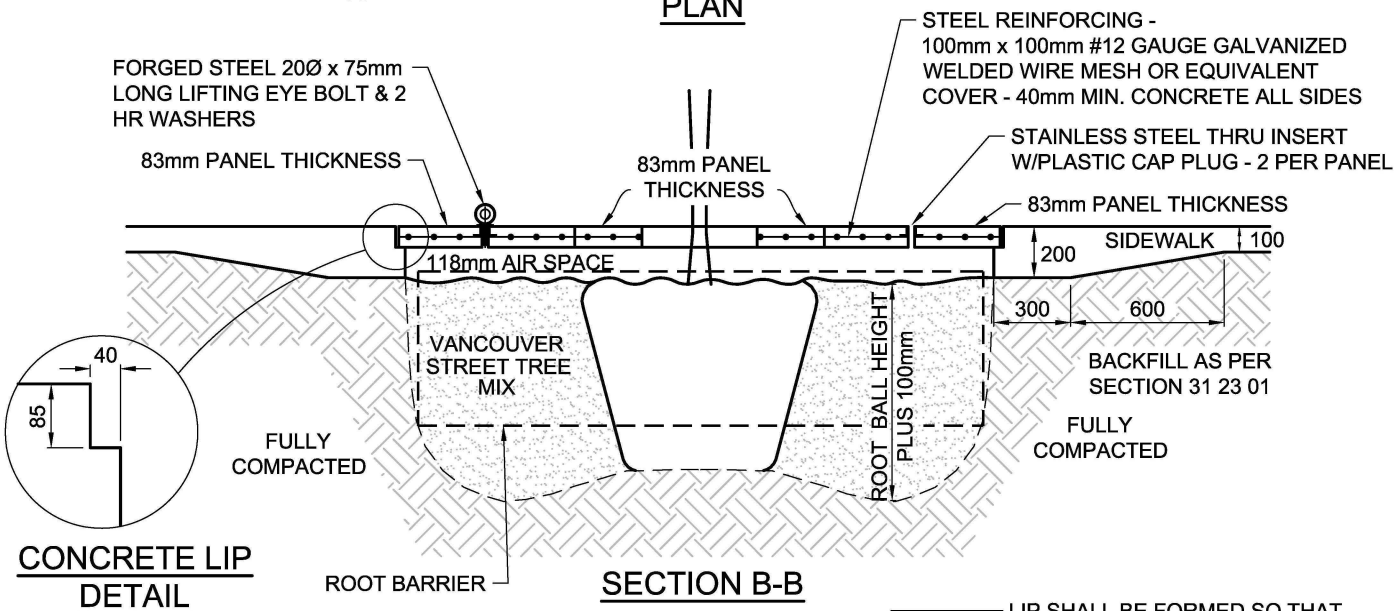

CONCRETE LIP DETAIL

SECTION B-B

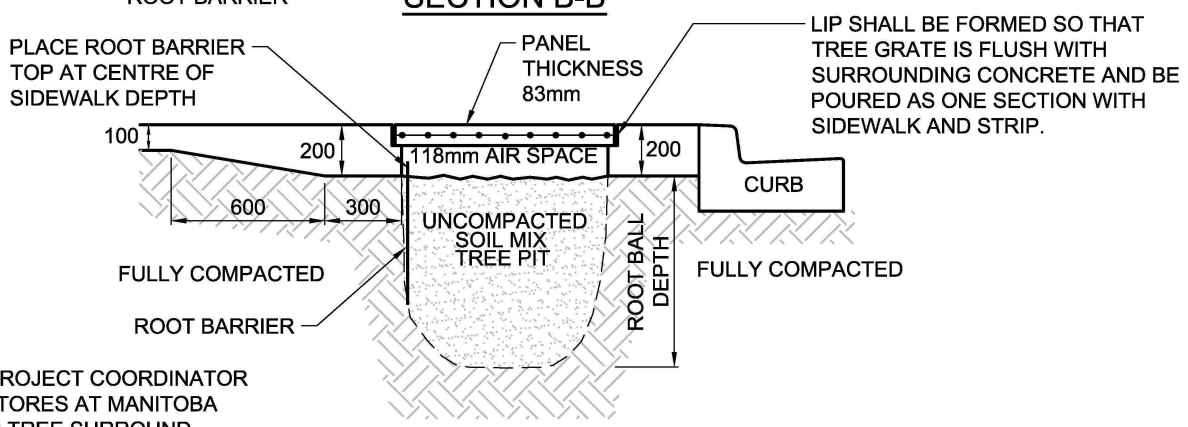

SECTION A-A

NOTES:

1. CONTACT PROJECT COORDINATOR CENTRAL STORES AT MANITOBA YARDS FOR TREE SURROUND.
2. ALL DIMENSIONS IN MILLIMETERS UNLESS STATED OTHERWISE.

SCALE: N.T.S.

REV.	REVISION DATE	APPROVED

TREES

FOUR PIECE TREE SURROUND

ISSUE DATE: SEPTEMBER 2018

APPROVED BY: J. LEE

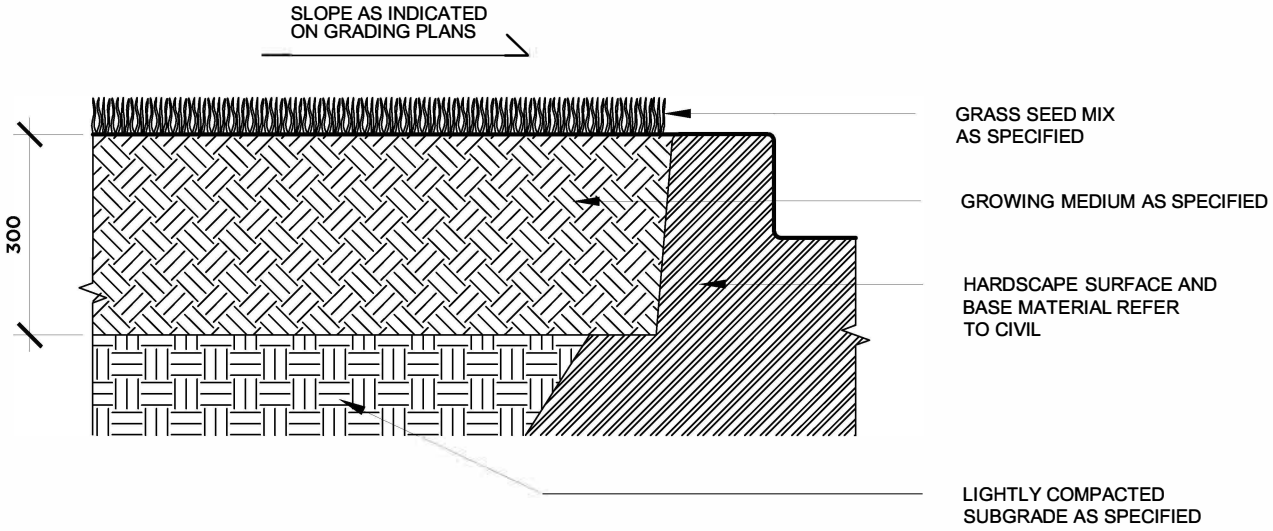

NOTES:

1. REFER TO SPECIFICATIONS FOR EXECUTION.

CITY OF VANCOUVER	STANDARD DETAIL DRAWINGS ENGINEERING SERVICES - VANCOUVER, B.C.	DRAWING No. G11.2

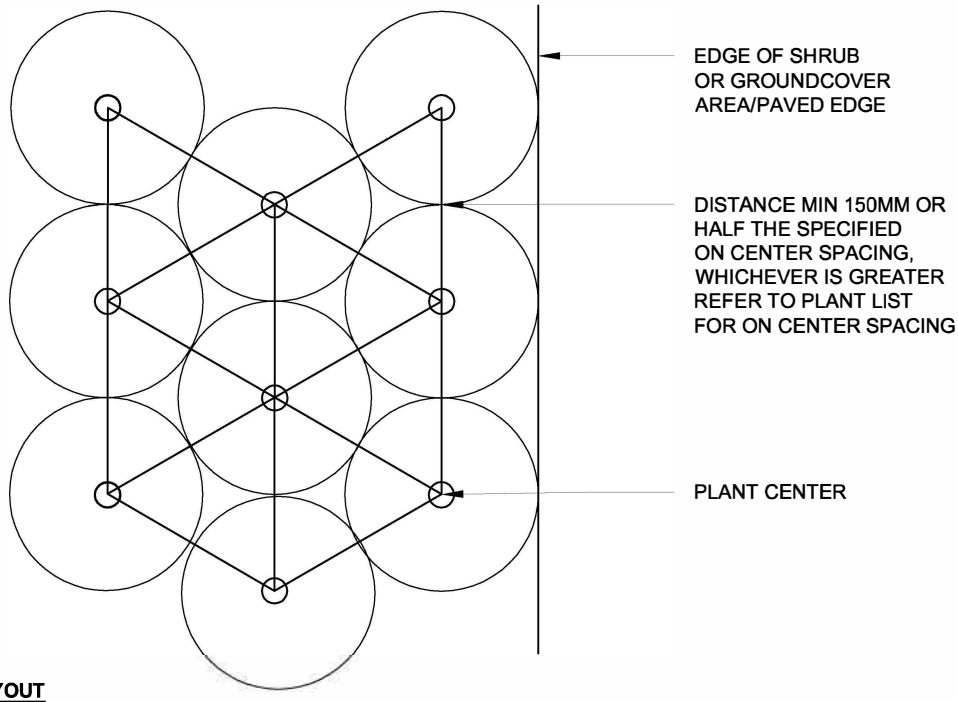

LAYOUT

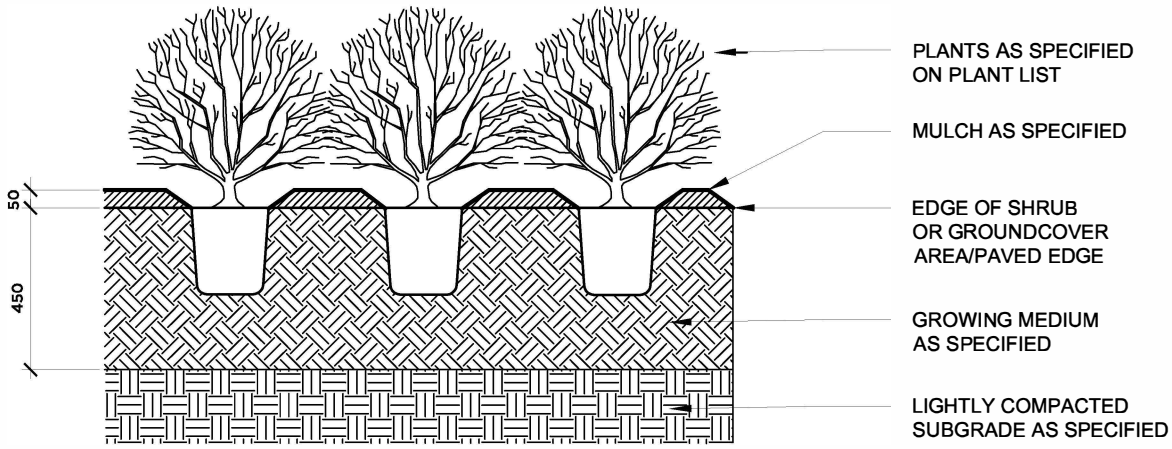

ELEVATION

NOTES:

1. A REPRESENTATIVE AREA OF EACH PLANT SPECIES IS TO BE LAID OUT AND APPROVED BY CITY REPRESENTATIVE PRIOR TO PLANTING

SCALE: N.T.S

REV.	REVISION DATE	APPROVED

PLANTING
SHRUB AND GROUND COVER PLANTING

ISSUE DATE: AUGUST 2019

APPROVED BY: B.MULHALL

CITY OF VANCOUVER

STANDARD DETAIL DRAWINGS

ENGINEERING SERVICES - VANCOUVER, B.C.

DRAWING No.

G11.3

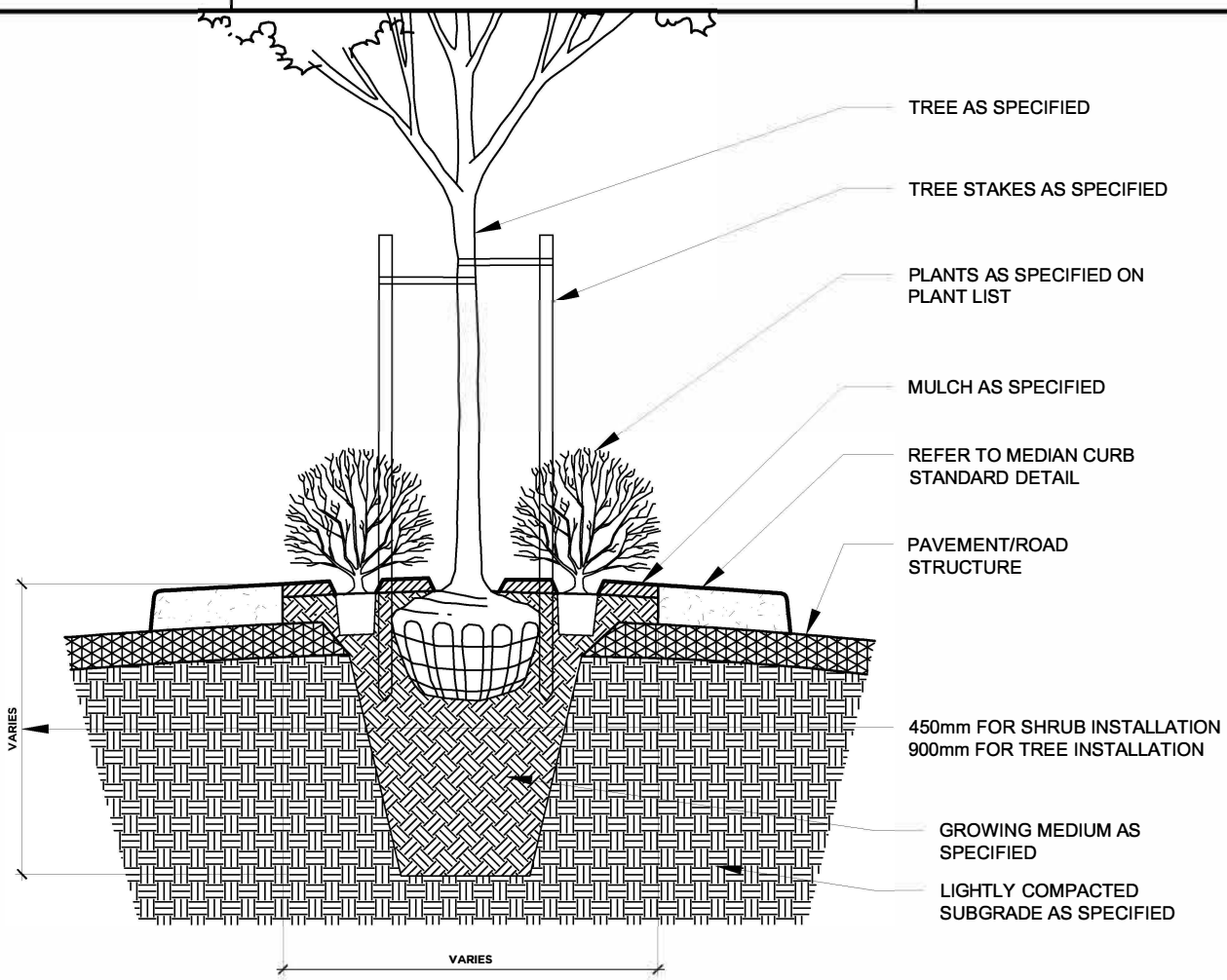

ELEVATION

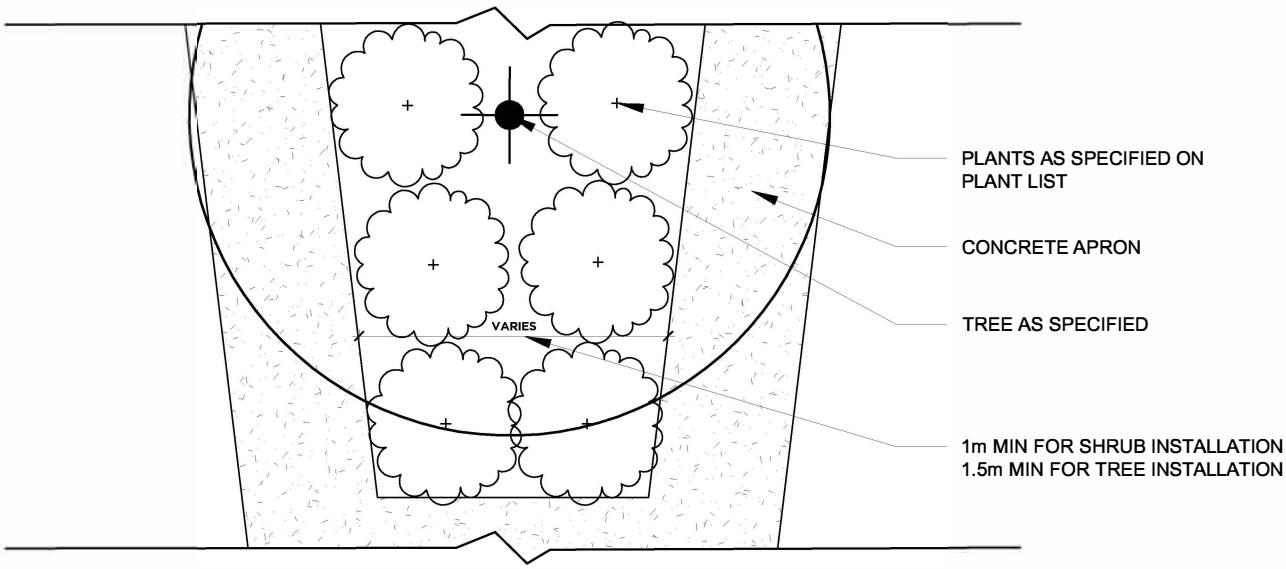

PLAN

SCALE: N.T.S

REV.	REVISION DATE	APPROVED

PLANTING
MEDIAN PLANTING

ISSUE DATE: AUGUST 2019

APPROVED BY: B.MULHALL

Electrical

Sheet Number	Sheet Title	Description
E0.1	DRAWING INDEX	ELECTRICAL
E1.3	CONCRETE BASES	POURED IN PLACE CONCRETE CONTROLLER BASE
E1.4	CONCRETE BASES	POURED IN PLACE CONCRETE BASE FOR CABINETS
E2.3	JUNCTION BOXES	TIER 22 RATED
E2.4	JUNCTION BOXES	DETAILS
E4.17	POLES	3.0m TRAFFIC SIGNAL POST
E4.23	POLES	1.8m / 2.5m TROLLEY POLE LUMINAIRE ARM
E4.24	POLES	1.8m / 2.5m TROLLEY POLE LUMINAIRE ARM
E5.2	HEADS	POLE SHAFT SIGNAL HEAD MOUNTING
E5.9A	HEADS	OVERHEAD SIGNAL HEAD MOUNTING (ADJUSTABLE BRACKET METHOD)
E5.9B	HEADS	OVERHEAD SIGNAL HEAD MOUNTING (ADJUSTABLE BRACKET METHOD)
E5.12	HEADS	AUDIBLE SIGNALS
E5.16	HEADS	OVERHEAD SIGN MOUNTING
E5.17	HEADS	FIRE SIGNAL SIGNS
E5.18A	HEADS	TENON MOUNT ELEVATOR PLUMBIZER INSTALLATION DETAILS
E5.18B	HEADS	TENON MOUNT ELEVATOR PLUMBIZER INSTALLATION DETAILS
E7.7	SERVICE PANELS	POLE MOUNT SERVICE PANEL AND WIREWAY DETAIL
E7.8A	SERVICE PANELS	POLE MOUNT SERVICE PANEL 100A, 120/240V, 1 PHASE STREET LIGHTING
E7.8B	SERVICE PANELS	POLE MOUNT SERVICE PANEL 100A, 240/480V, 1 PHASE STREET LIGHTING
E7.8C	SERVICE PANELS	POLE MOUNT SERVICE PANEL 100A, 120/240V, 1 PHASE TS/SL COMBO
E7.9A	SERVICE CABINETS	TYPICAL SERVICE KIOSK / CABINET
E7.9B	SERVICE CABINETS	SERVICE CABINET STANDARD 120/208V 3Ø, 4W STREET LIGHTING / TRAFFIC SIGNAL
E7.9C	SERVICE CABINETS	SERVICE KIOSK STANDARD 600V 120/208V 3Ø, 4W
E7.13	WIRING	25 CONDUCTOR SIGNAL CABLE COLOUR CODING
E7.19	WIRING	MISSING BONDING CONDUCTOR MITIGATION INSTALLATION
E7.20	WIRING	POLE AND JUNCTION BOX PLACEMENT
E7.21	WIRING	COMMUNICATIONS SYSTEM DUCTING
E8.2	DETECTOR LOOPS	LOOP STUB
E8.7	DETECTOR LOOPS	VEHICLE DETECTOR LOOP (TYP.)
E8.11	DETECTOR LOOPS	SYSTEM LOOP (TYP.)

CITY OF VANCOUVER	STANDARD DETAIL DRAWINGS ENGINEERING SERVICES - VANCOUVER, B.C.	DRAWING No. E1.3

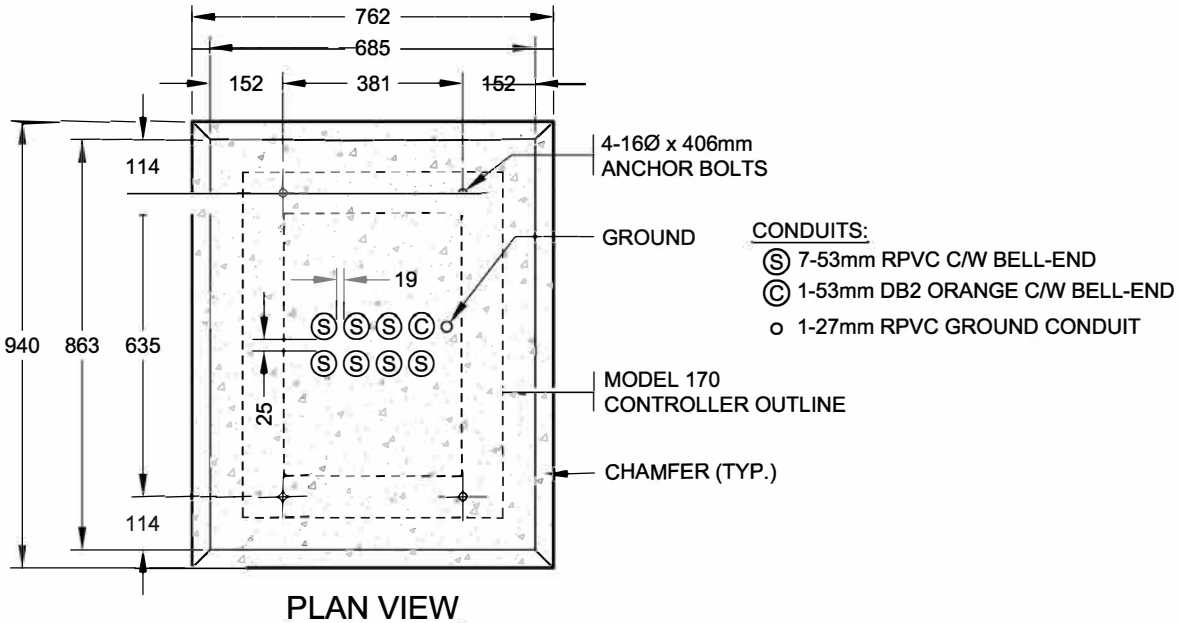

PLAN VIEW

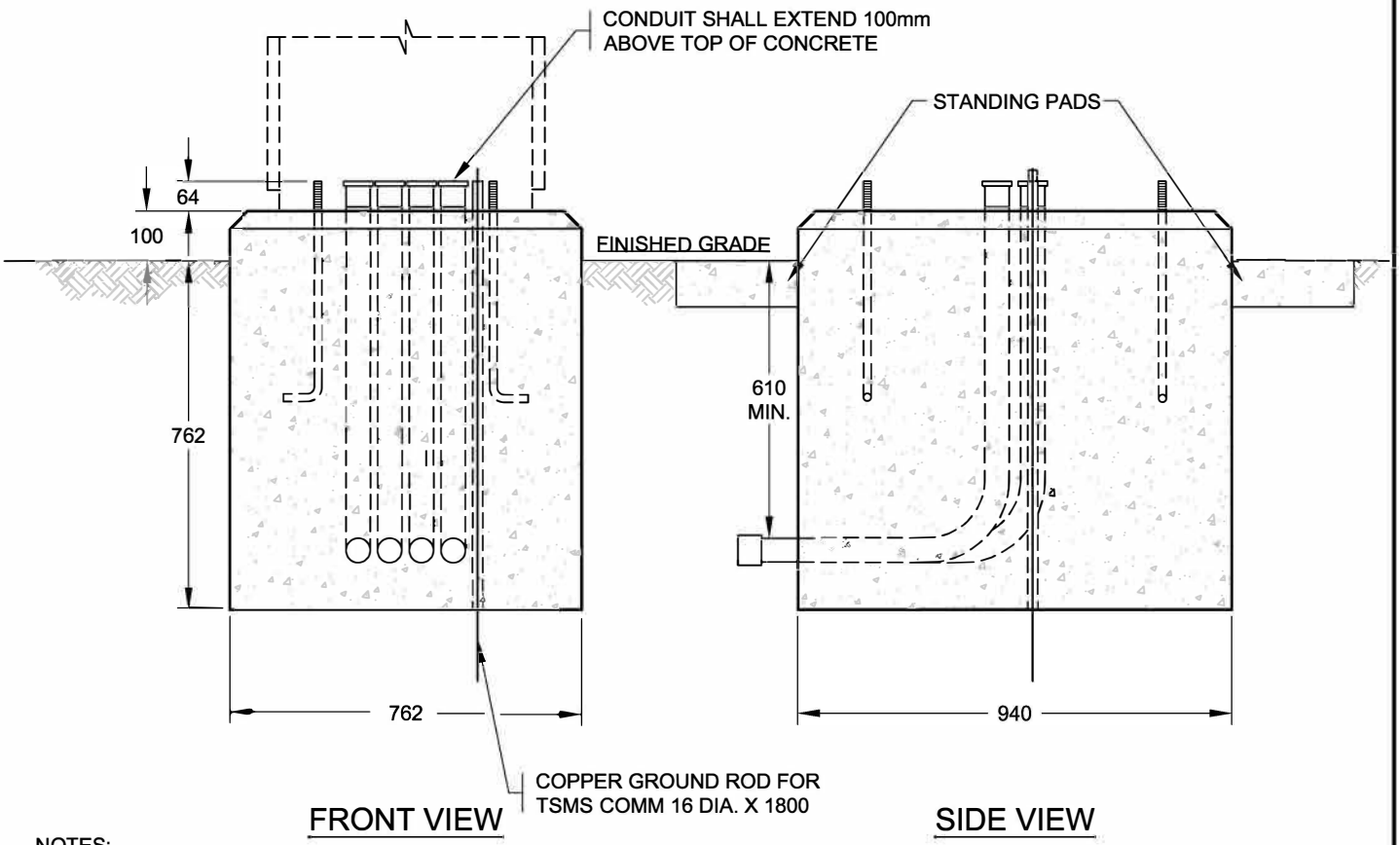

FRONT VIEW

SIDE VIEW

NOTES:

1. REFER TO CONTRACT DRAWINGS, MMCD AND CITY CONSTRUCTION SPECIFICATIONS FOR FURTHER INFORMATION.
2. BASES TO BE STAMPED WITH DATE AND BASE TYPE.
3. ALL DIMENSIONS ARE IN MILLIMETRES UNLESS OTHERWISE NOTED.

SCALE: N.T.S.

REV.	REVISION DATE	APPROVED

CONCRETE BASES

POURED IN PLACE CONCRETE CONTROLLER BASE

ISSUE DATE: SEPTEMBER 2018

APPROVED BY: D. EPA

CITY OF VANCOUVER

STANDARD DETAIL DRAWINGS

ENGINEERING SERVICES - VANCOUVER, B.C.

DRAWING No. E1.4

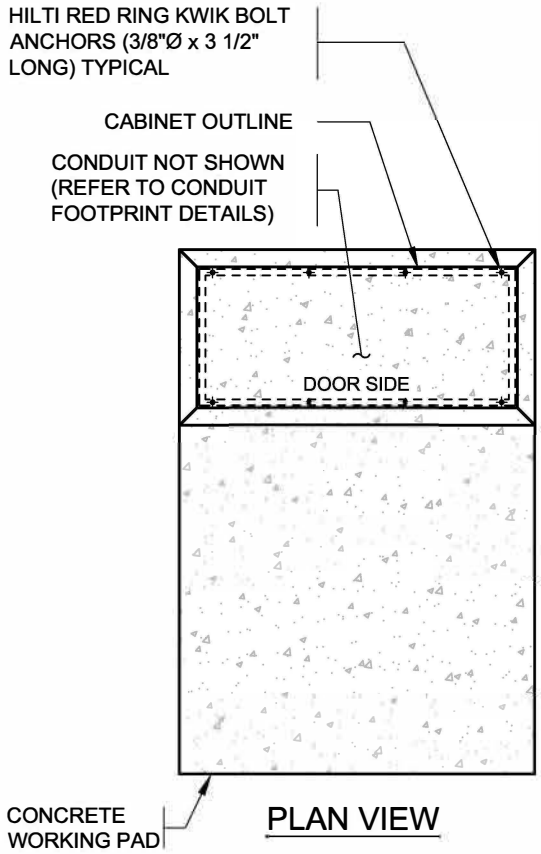

PLAN VIEW

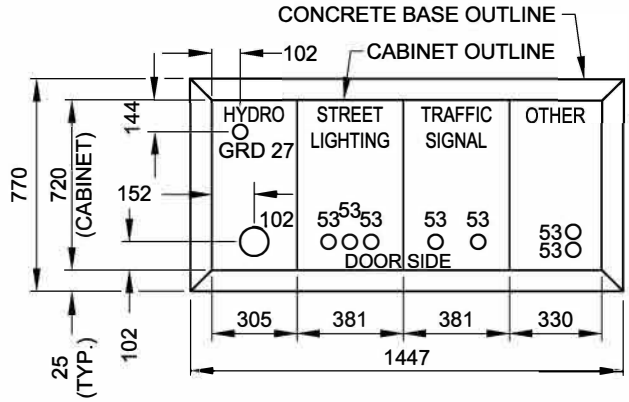

SMALL/MEDIUM ELECTRICAL CABINET FOOTPRINT

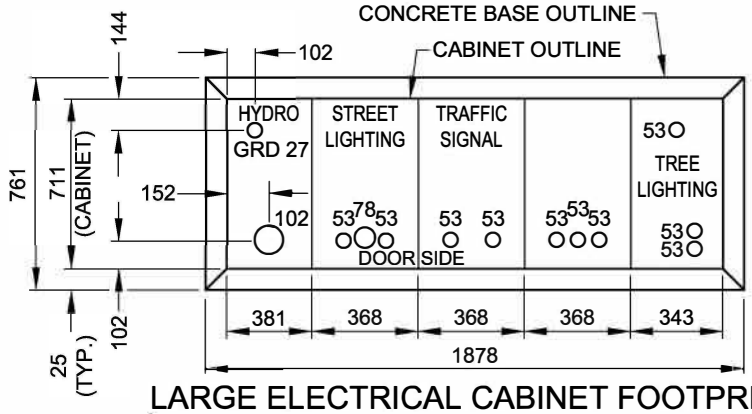

LARGE ELECTRICAL CABINET FOOTPRINT

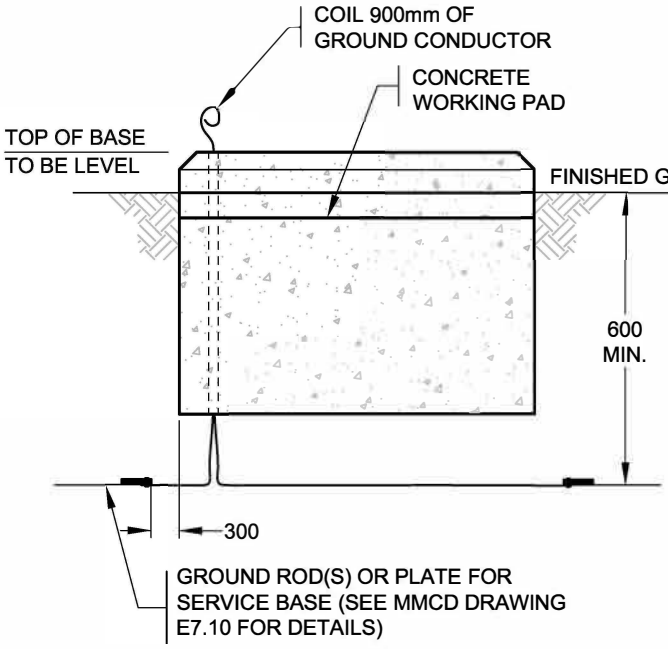

FRONT VIEW

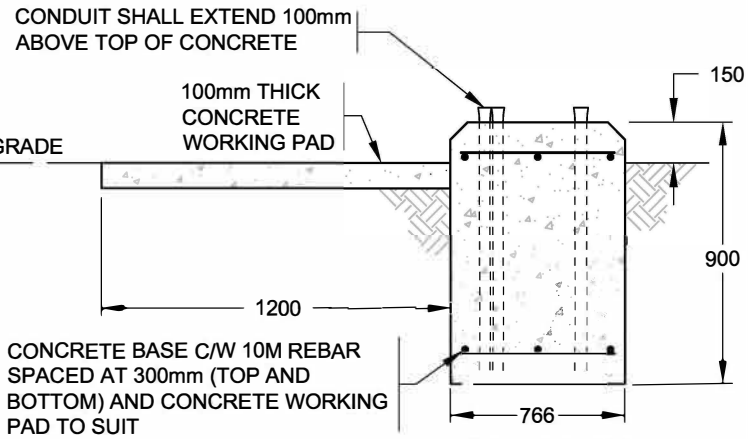

SIDE VIEW

NOTES:

1. REFER TO CONTRACT DRAWINGS, MMCD AND CITY CONSTRUCTION SPECIFICATIONS FOR FURTHER INFORMATION.
2. BASES TO BE STAMPED WITH DATE AND BASE TYPE.
3. ALL DIMENSIONS ARE IN MILLIMETRES UNLESS OTHERWISE NOTED.

SCALE: N.T.S.

REV.	REVISION DATE	APPROVED

CONCRETE BASES

POURED IN PLACE CONCRETE BASE FOR CABINETS

ISSUE DATE: SEPTEMBER 2018

APPROVED BY: D.EPA

CITY OF VANCOUVER

STANDARD DETAIL DRAWINGS

ENGINEERING SERVICES - VANCOUVER, B.C.

DRAWING No.

E2.3

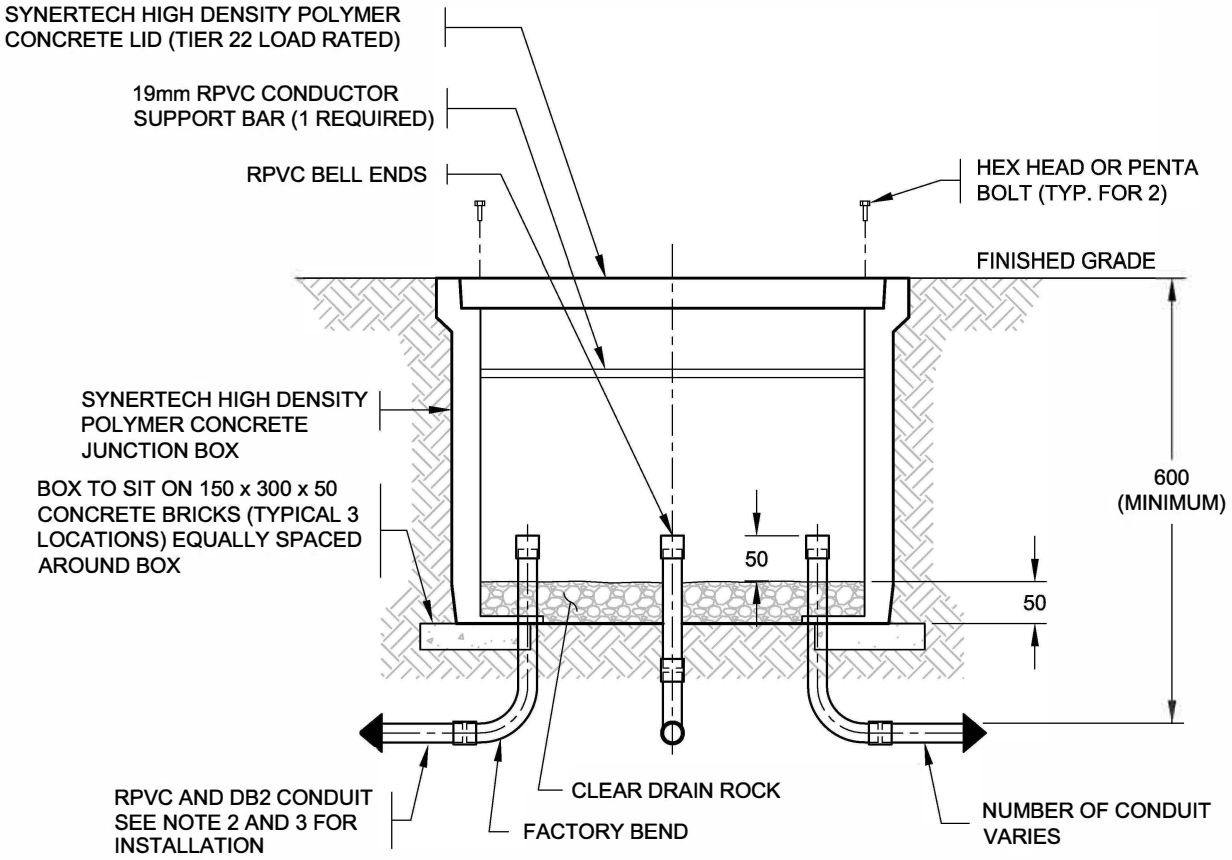

ELEVATION

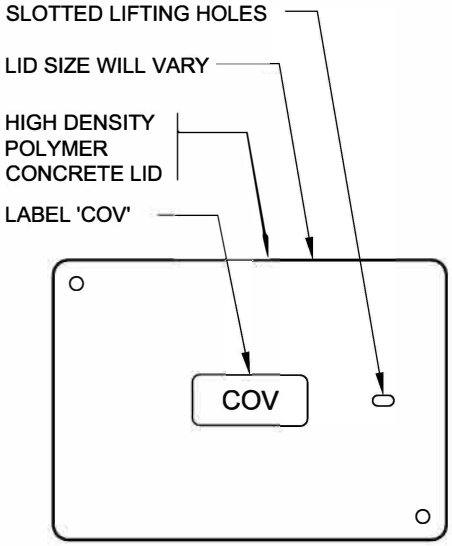

NOTES:

1. REFER TO CONTRACT DRAWINGS, MMCD AND CITY CONSTRUCTION SPECIFICATIONS FOR FURTHER INFORMATION.
2. RPVC AND DB2 COM 53mm SIZE AND BELOW SHALL ENTER THE JB VERTICALLY.
3. 78 & 103mm DB2 COM SHALL HAVE FLARED ENDS AND ENTER THE JB FROM THE SHORT SIDE HORIZONTALLY.
4. 78 & 103mm RPVC COM SHALL HAVE FLARED ENDS AND ENTER THE JB FROM THE BOTTOM VERTICALLY.
5. ALL JB INSTALLATIONS NEAR BC HYDRO WOODEN POLES MUST BE MIN. 2m AWAY.
6. ALL DIMENSIONS ARE IN MILLIMETRES UNLESS OTHERWISE NOTED.

SCALE: N.T.S.

REV.	REVISION DATE	APPROVED

JUNCTION BOXES
TIER 22 RATED

ISSUE DATE: SEPTEMBER 2018

APPROVED BY: D. EPA

CITY OF VANCOUVER

STANDARD DETAIL DRAWINGS

ENGINEERING SERVICES - VANCOUVER, B.C.

DRAWING No.

E2.4

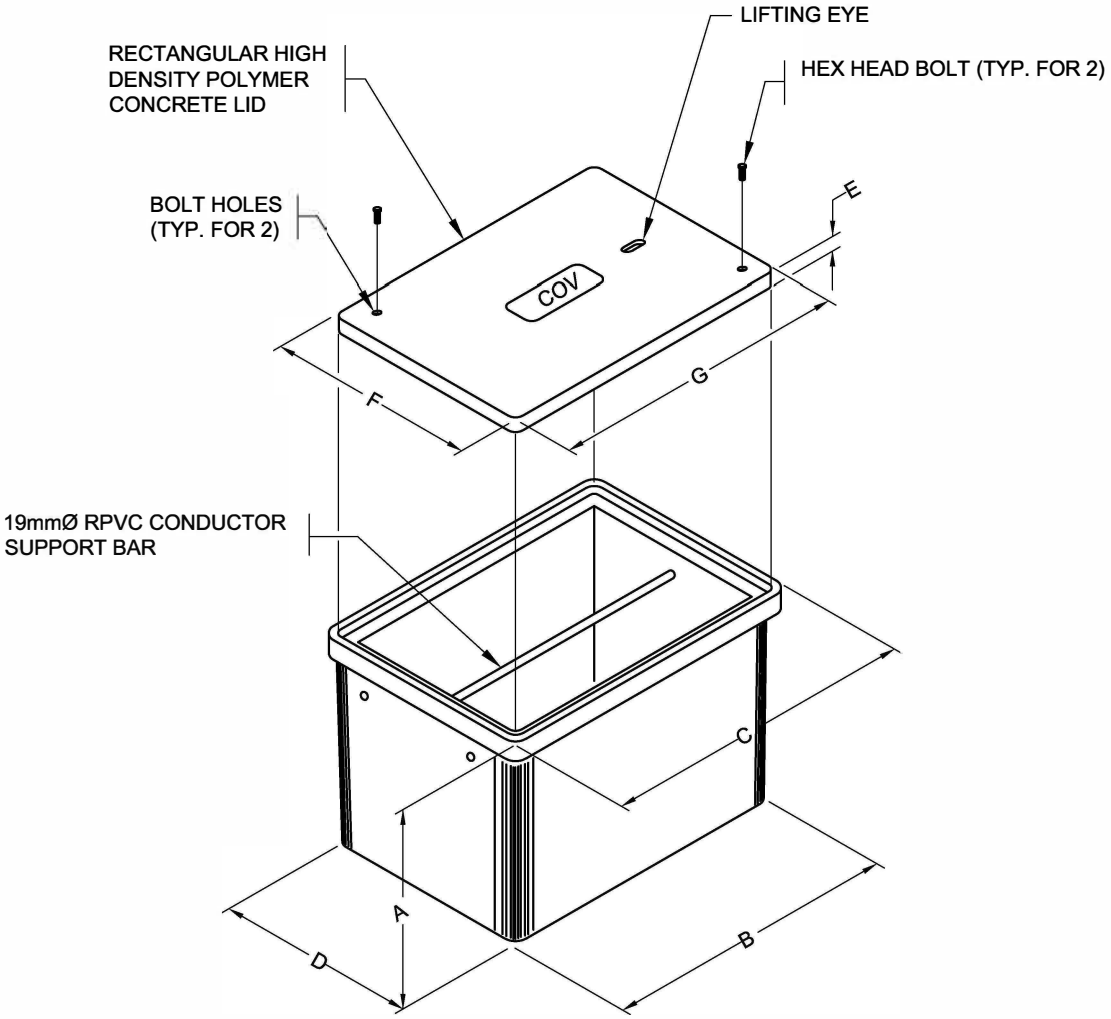

POLYMER CONCRETE JUNCTION BOX

JUNCTION BOX TYPE	A	B	C	D	E	F	G	PART NUMBER	BRAND
TYPE 3 (279x457x457)	457	432	508	292	26	280	457	SYN 1118-18	OLD CASTLE SYNERTECH
TYPE 4 (330x610x457)	457	534	636	356	50	331	584	SYN 1324-24	
TYPE 5 (432x762x610)	610	763	814	433	50	432	763	SYN 1730-24	
TYPE 6 (610x914x610)	610	889	941	585	75	610	890	SYN 2436-24	

NOTES:

1. REFER TO CONTRACT DRAWINGS, MMCD AND CITY CONSTRUCTION SPECIFICATIONS FOR FURTHER INFORMATION.
2. ALL DIMENSIONS ARE IN MILLIMETRES UNLESS OTHERWISE NOTED.

SCALE: N.T.S.

REV.	REVISION DATE	APPROVED

JUNCTION BOXES DETAILS

ISSUE DATE: SEPTEMBER 2018

APPROVED BY: D. EPA

CITY OF VANCOUVER

STANDARD DETAIL DRAWINGS

ENGINEERING SERVICES - VANCOUVER, B.C.

DRAWING No.

E4.17

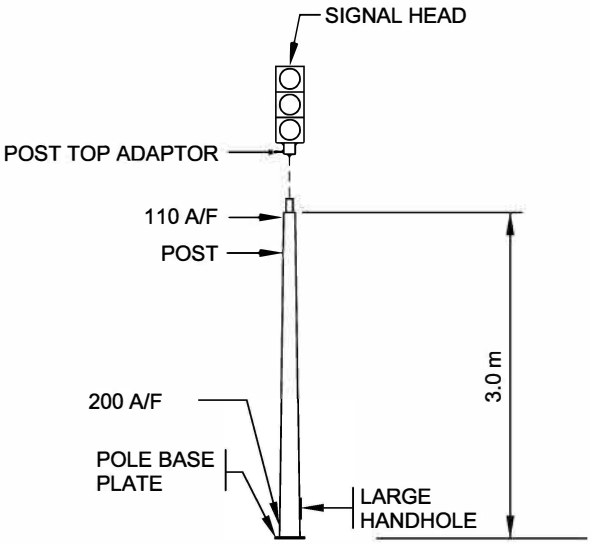

TRAFFIC SIGNAL POST

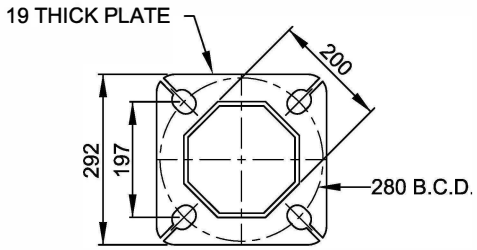

POLE BASE PLATE

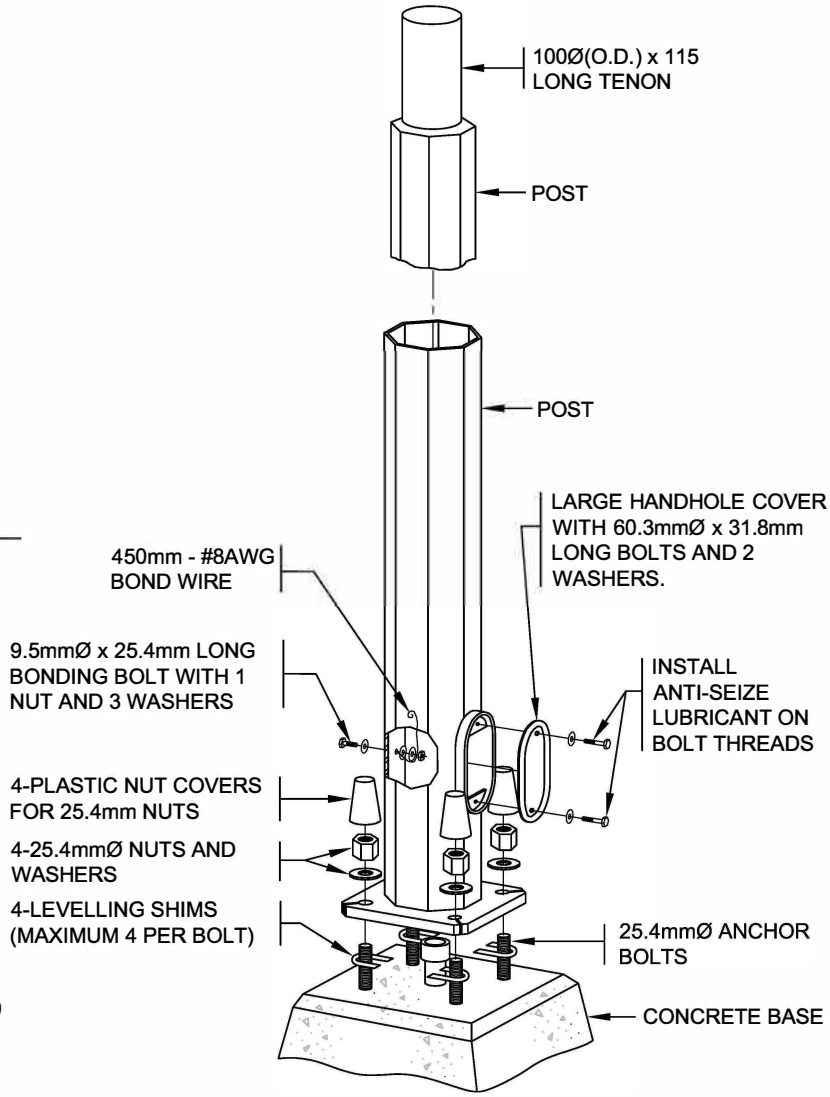

POLE ASSEMBLY DETAIL

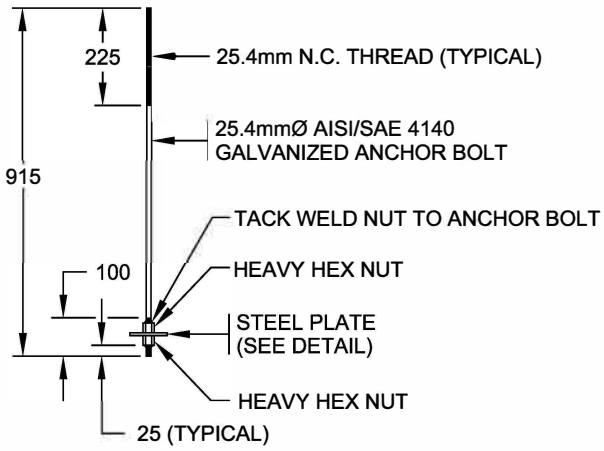

ANCHOR BOLT

4 PER SET

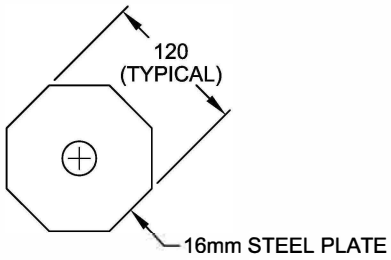

STEEL PLATE

NOTES:

1. REFER TO CONTRACT DRAWINGS, MMCD AND CITY CONSTRUCTION SPECIFICATIONS FOR FURTHER INFORMATION.
2. SHAFTS TO BE INSTALLED PLUMB.
3. ALL SHAFTS, ARMS AND EXTENSIONS TO BE SUPPLIED WITH A GALVANIZED FINISH, UNLESS OTHERWISE NOTED.
4. APPLY GREASE TO ANCHOR BOLT THREADS.
5. TOUCH UP ANY SCRATCHES IN GALVANIZED SURFACES WITH COLD GALVANIZING COMPOUND.
6. ALL DIMENSIONS ARE IN MILLIMETRES UNLESS OTHERWISE NOTED.

SCALE: N.T.S.

REV.	REVISION DATE	APPROVED

POLES

3.0m TRAFFIC SIGNAL POST

ISSUE DATE: SEPTEMBER 2018

APPROVED BY: D. EPA

CITY OF VANCOUVER

STANDARD DETAIL DRAWINGS

ENGINEERING SERVICES - VANCOUVER, B.C.

DRAWING No.

E4.23

QTY	ITEM NO.	PART NUMBER	DESCRIPTION	MATERIAL	UNIT WEIGHT	TOTAL WEIGHT
1	1	S15-22-AVA-A02	Bracket Arm, For Trolley Pole, City of Vancouver	See drawing S15-22-AVA-A02	5.0	5.0
2	1	R20-65-3.00-C003	Arm, 76.2mm Sch 10 Pipe, OD=88.9mm, Thk=3.05mm	ASTM A53 Grade B	16.0	16.0
3	1	P66-00-84X62X10	TENON PLATE, ROUND, OD=84mm, CO=62mm, THK=9.53mm	G40.21 300W	0.2	0.2
4	1	P65-60X230-001	TENON, HSS ROUND, OD=60mm, THK=3.9mm, L=230mm	ASTM A500 GR.C	1.2	1.2
5	2	H12-GS-2,020-10.00x8.86	U Bolt, Wire Dia=12.7mm, For Pole Size= 254.0mm, Thread Length = 177.8mm, Galvanized Steel	SAE GR.5	0.9	1.8
6	8	H40-A194-G0.500	NUT, HEAVY HEX, 12.7mm, GALV	ASTM A563 GRADE DH	0.0	0.0
7	8	H70-F436-G0.500	WASHER, FLAT, STRUCTURAL, 12.7mm, GALV	ASTM F436	0.0	0.0
8	1	H10-A325-0.500X2.00	BOLT HEX, 12.7mm x 50.8mm, GALV	ASTM A325 TYPE1	0.1	0.1
9	2	H70-PW-D001	Rectangular Washer Plate, Length=101.6mm, Width=38.1mm, Thk=7.9mm, Galv	G40.21 300W	0.2	0.4
10	1	R20-15-AVA-01	Curved Rod, Dia=38.1mm, Rod Dia=9.53mm	G40.21 300W	0.1	0.1
					Assembly Weight (kg)=	24.8

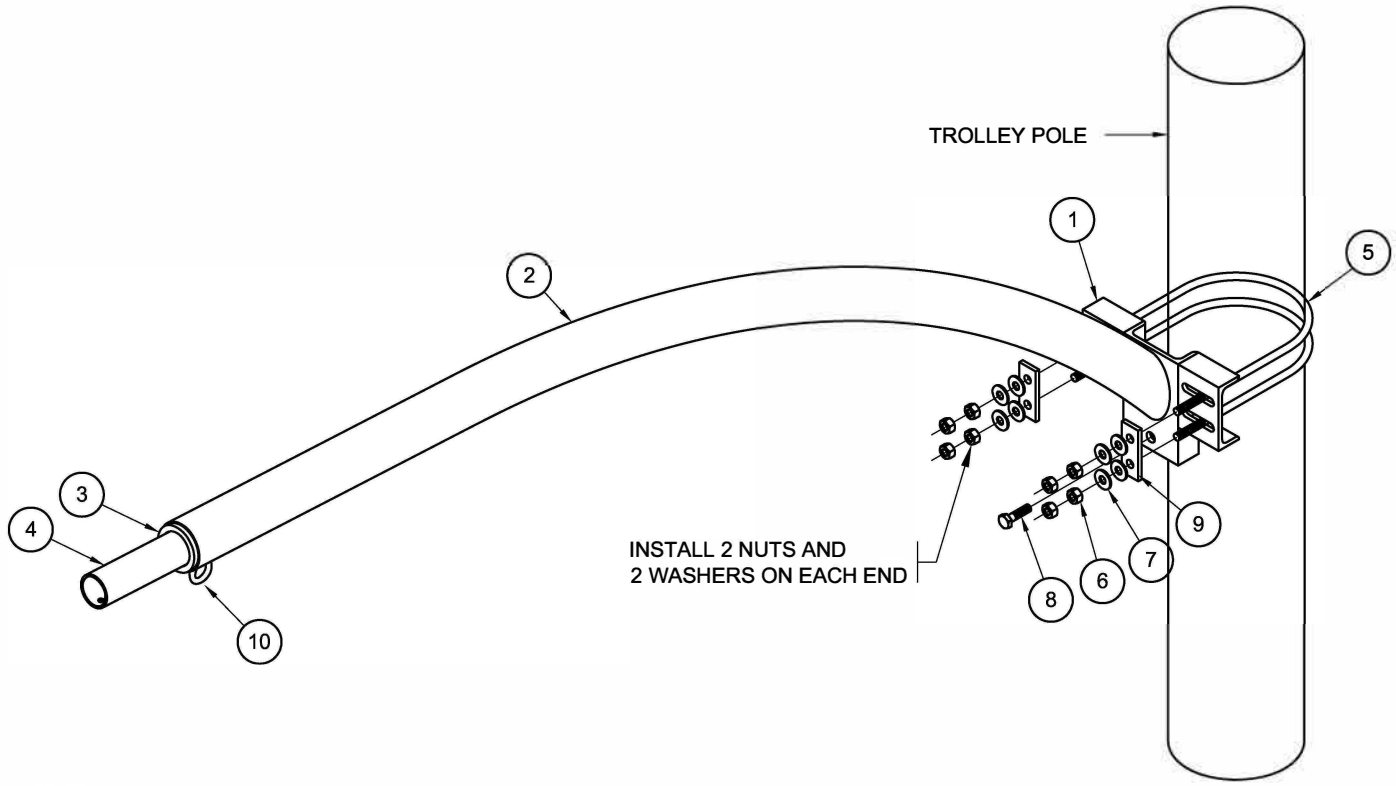

NOTES:

1. REFER TO CONTRACT DRAWINGS, MMCD AND CITY CONSTRUCTION SPECIFICATIONS FOR FURTHER INFORMATION.
2. ALL DIMENSIONS ARE IN MILLIMETRES UNLESS OTHERWISE NOTED.

SCALE: N.T.S.

REV.	REVISION DATE	APPROVED

POLES

1.8M / 2.5M TROLLEY POLE LUMINAIRE ARM

ISSUE DATE: SEPTEMBER 2018

APPROVED BY: D. EPA

CITY OF VANCOUVER

STANDARD DETAIL DRAWINGS

ENGINEERING SERVICES - VANCOUVER, B.C.

DRAWING No.

E4.24

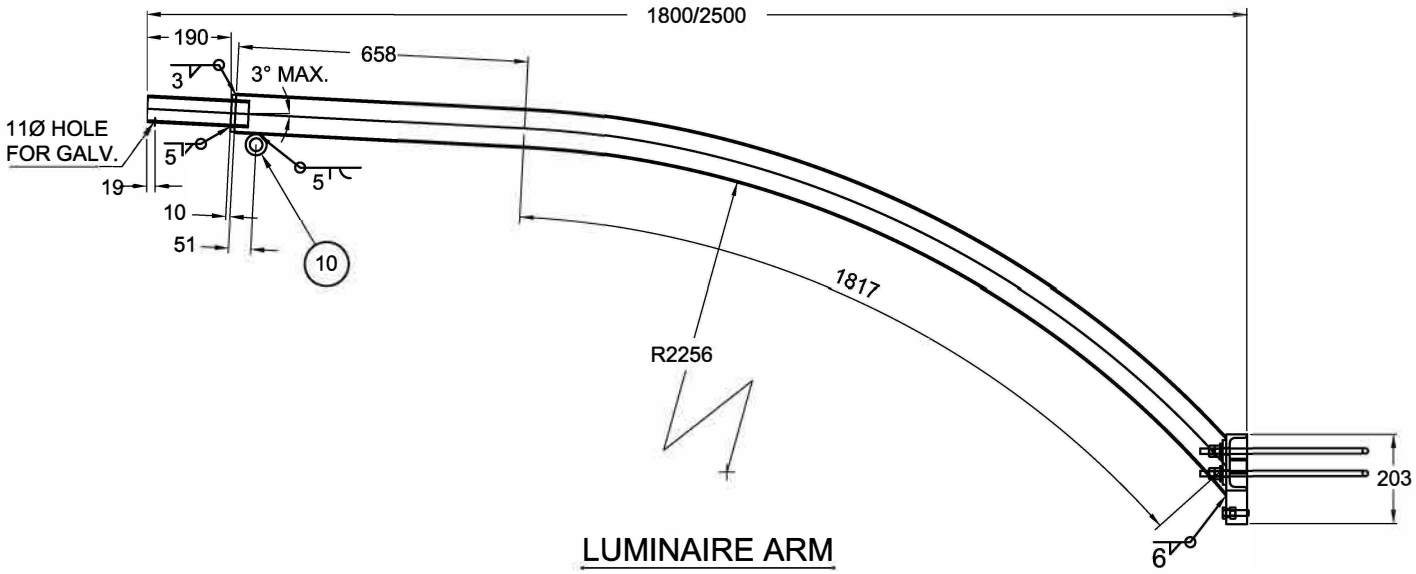

LUMINAIRE ARM

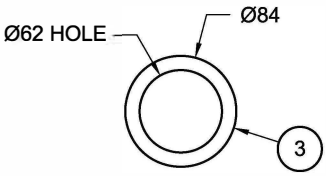

TENON PLATE

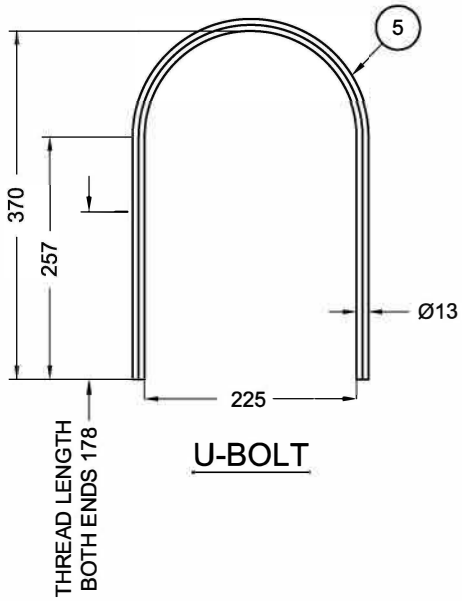

U-BOLT

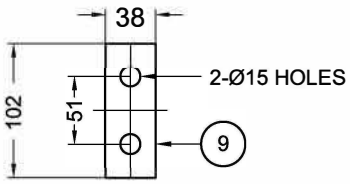

WASHER PLATE

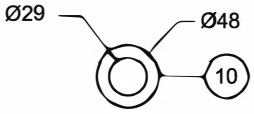

CURVED ROD

NOTES:

1. REFER TO CONTRACT DRAWINGS, MMCD AND CITY CONSTRUCTION SPECIFICATIONS FOR FURTHER INFORMATION.
2. ALL DIMENSIONS ARE IN MILLIMETRES UNLESS OTHERWISE NOTED.

SCALE: N.T.S.

REV.	REVISION DATE	APPROVED

POLES

1.8M / 2.5M TROLLEY POLE LUMINAIRE ARM

ISSUE DATE: SEPTEMBER 2018

APPROVED BY: D. EPA

CITY OF VANCOUVER

STANDARD DETAIL DRAWINGS

ENGINEERING SERVICES - VANCOUVER, B.C.

DRAWING No.

E5.2

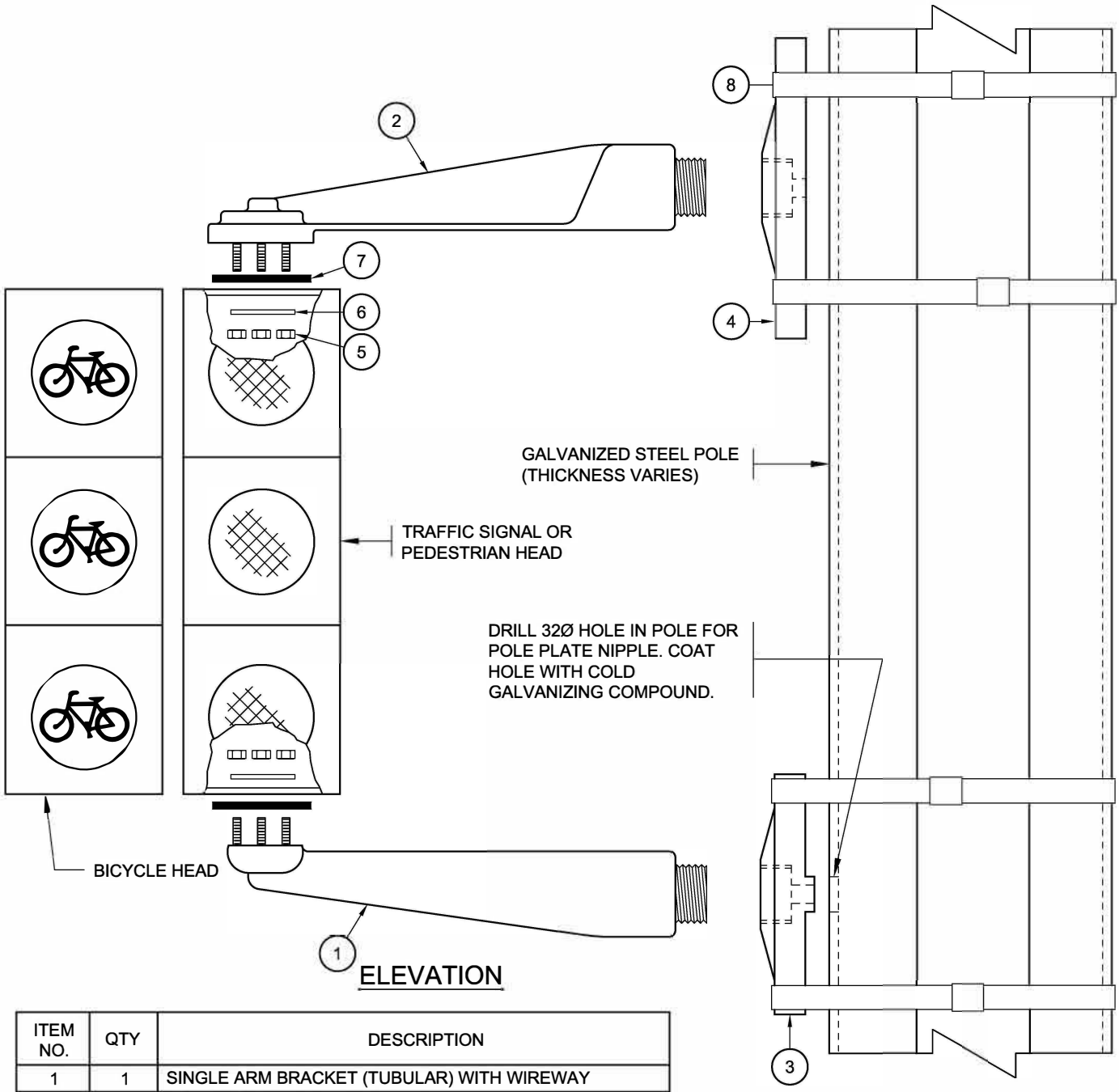

ELEVATION

ITEM NO.	QTY	DESCRIPTION
1	1	SINGLE ARM BRACKET (TUBULAR) WITH WIREWAY
2	1	SINGLE ARM BRACKET (T SECTION)
3	1	POLE PLATE WITH NIPPLE
4	1	POLE PLATE WITH NO NIPPLE AND SLOTTED HOLES
5	6	7.9mmØ STAINLESS STEEL NYLOCK NUT
6	2	STAINLESS STEEL RETAINING WASHER
7	2	RUBBER GASKET
8	4	19.1mm STAINLESS STEEL BANDING

NOTES:

1. REFER TO CONTRACT DRAWINGS, MMCD AND CITY CONSTRUCTION SPECIFICATIONS FOR FURTHER INFORMATION.
2. AIM SIGNAL HEADS AS DIRECTED BY CONTRACT ADMINISTRATOR.
3. ALL DIMENSIONS ARE IN MILLIMETRES UNLESS OTHERWISE NOTED.

SCALE: N.T.S.

REV.	REVISION DATE	APPROVED

HEADS

POLE SHAFT SIGNAL HEAD MOUNTING

ISSUE DATE: SEPTEMBER 2018

APPROVED BY: D. EPA

CITY OF VANCOUVER	STANDARD DETAIL DRAWINGS ENGINEERING SERVICES - VANCOUVER, B.C.	DRAWING No. E5.9A

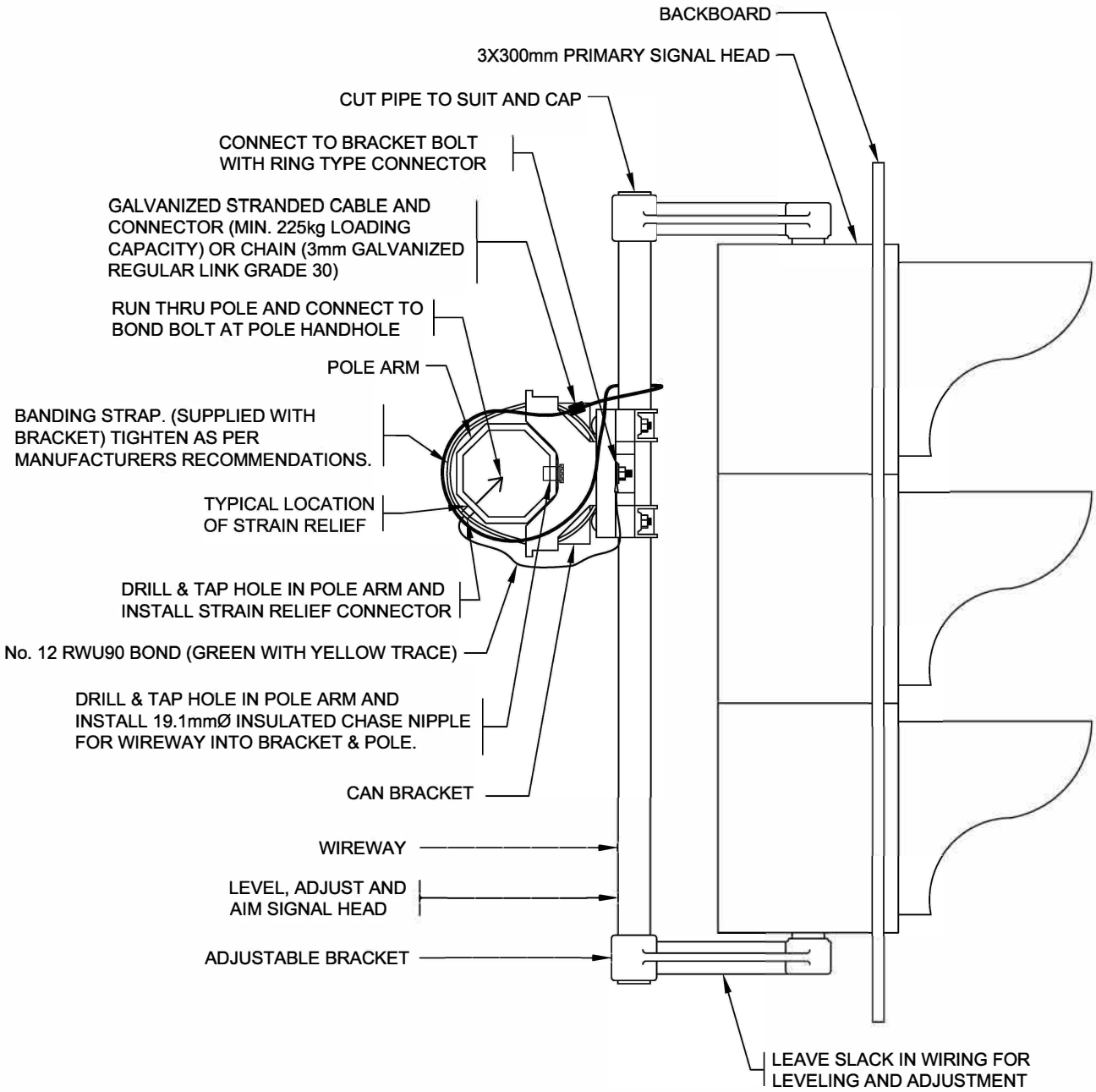

NOTES:

1. REFER TO CONTRACT DRAWINGS, MMCD AND CITY CONSTRUCTION SPECIFICATIONS FOR FURTHER INFORMATION.
2. AIM SIGNAL HEADS AS DIRECTED BY CONTRACT ADMINISTRATOR.
3. ALL DIMENSIONS ARE IN MILLIMETRES UNLESS OTHERWISE NOTED.
4. ALL METAL PARTS THAT ELECTRICAL CONDUCTORS RUN THROUGH SHALL BE BONDED.

SCALE: N.T.S.

REV.	REVISION DATE	APPROVED

HEADS

OVERHEAD SIGNAL HEAD MOUNTING (ADJUSTABLE BRACKET METHOD)

ISSUE DATE: SEPTEMBER 2018

APPROVED BY: D. EPA

CITY OF VANCOUVER

STANDARD DETAIL DRAWINGS

ENGINEERING SERVICES - VANCOUVER, B.C.

DRAWING No.

E5.9B

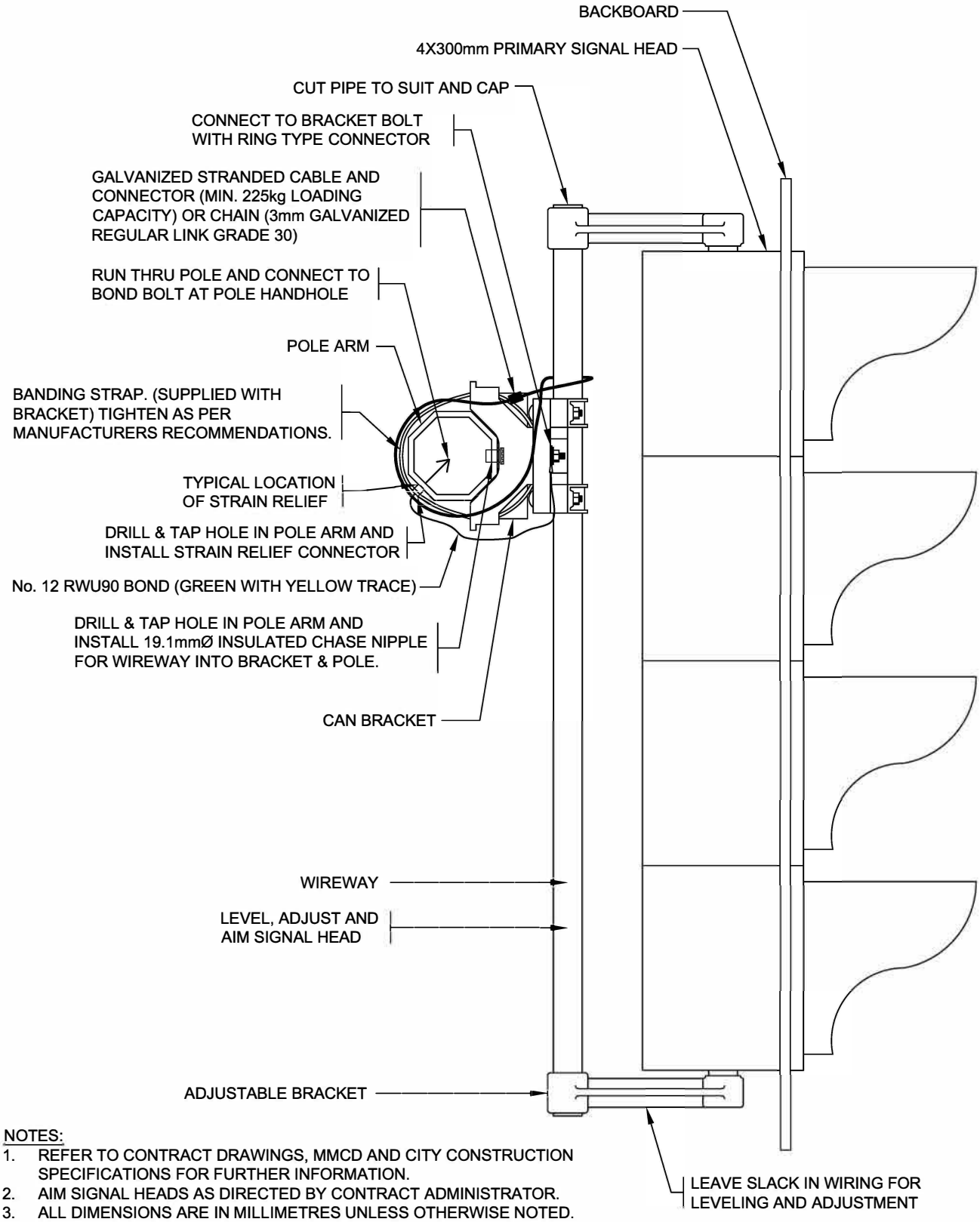

NOTES:

1. REFER TO CONTRACT DRAWINGS, MMCD AND CITY CONSTRUCTION SPECIFICATIONS FOR FURTHER INFORMATION.
2. AIM SIGNAL HEADS AS DIRECTED BY CONTRACT ADMINISTRATOR.
3. ALL DIMENSIONS ARE IN MILLIMETRES UNLESS OTHERWISE NOTED.
4. ALL METAL PARTS THAT ELECTRICAL CONDUCTORS RUN THROUGH SHALL BE BONDED.

SCALE: N.T.S.

REV.	REVISION DATE	APPROVED

HEADS

OVERHEAD SIGNAL HEAD MOUNTING (ADJUSTABLE BRACKET METHOD)

ISSUE DATE: SEPTEMBER 2018

APPROVED BY: D. EPA

CITY OF VANCOUVER

STANDARD DETAIL DRAWINGS

ENGINEERING SERVICES - VANCOUVER, B.C.

DRAWING No.

E5.12

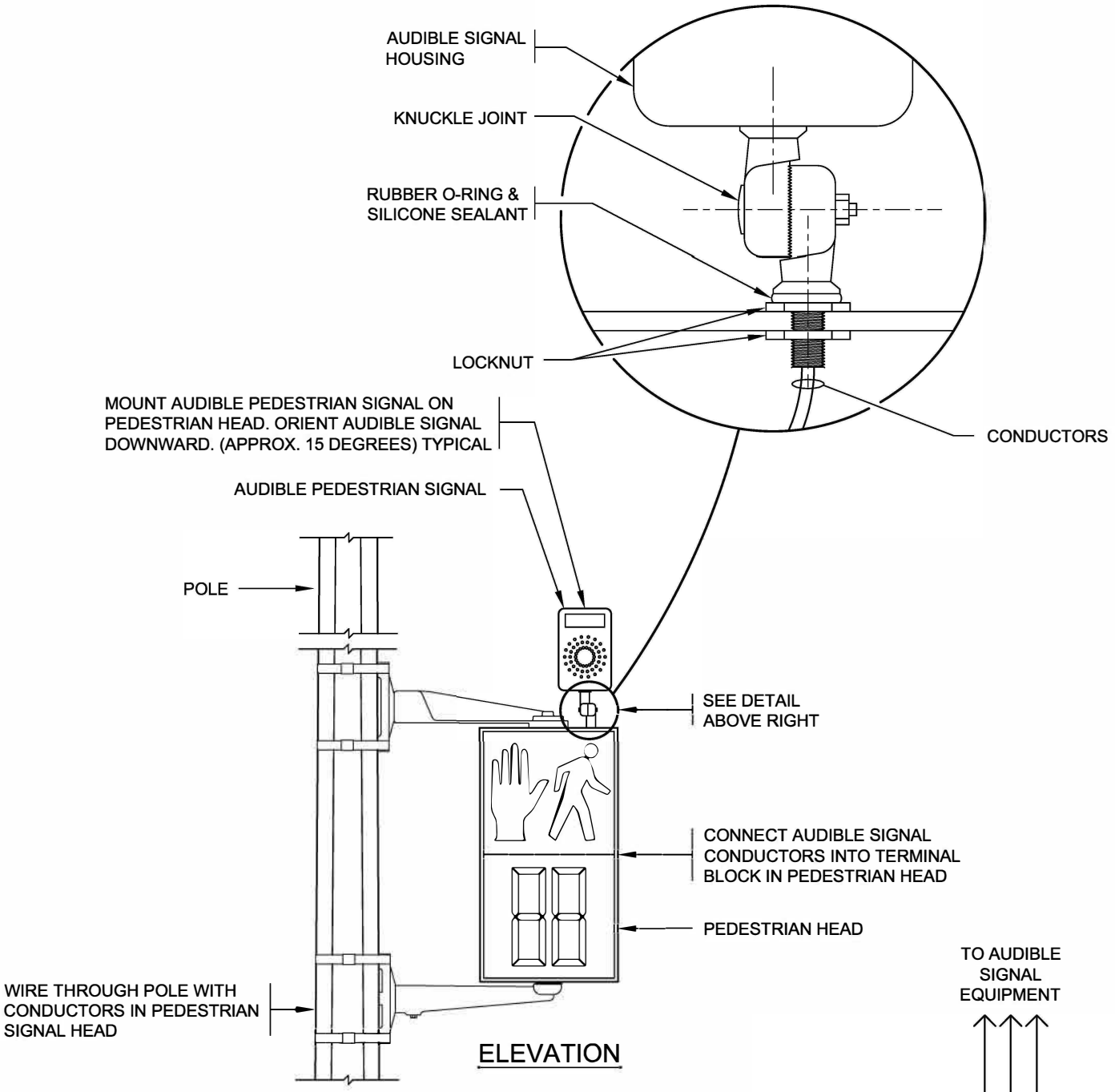

ELEVATION

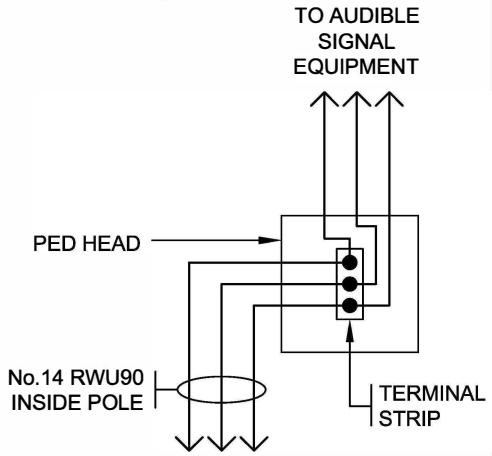

WIRING DIAGRAM

SCALE: N.T.S.

NOTES:

1. REFER TO CONTRACT DRAWINGS, MMCD AND CITY CONSTRUCTION SPECIFICATIONS FOR FURTHER INFORMATION.
2. AIM, CONNECT AUDIBLE SIGNAL AS PER MANUFACTURERS INSTRUCTIONS AND ADJUST VOLUME AS REQUIRED BY CITY TO SATISFACTION OF CONTRACT ADMINISTRATOR.
3. AUDIBLE SIGNAL TO 'CHIRP' FOR EAST TO WEST CROSSINGS & 'CUCKOO' FOR NORTH TO SOUTH CROSSINGS. AT INTERSECTIONS WHERE NORTH/SOUTH AND EAST/WEST ARE NOT EASILY DEFINED CONTACT CONTRACT ADMINISTRATOR FOR DIRECTION.
4. ALL DIMENSIONS ARE IN MILLIMETRES UNLESS OTHERWISE NOTED.

REV.	REVISION DATE	APPROVED

HEADS

AUDIBLE SIGNALS

ISSUE DATE: SEPTEMBER 2018

APPROVED BY: D. EPA

CITY OF VANCOUVER	STANDARD DETAIL DRAWINGS ENGINEERING SERVICES - VANCOUVER, B.C.	DRAWING No. E5.16

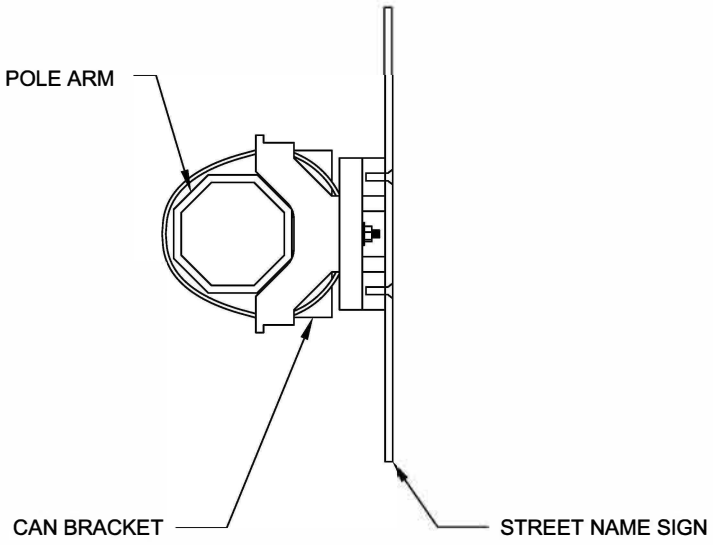

NOTES:
1. REFER TO CONTRACT DRAWINGS, MMCD AND CITY CONSTRUCTION SPECIFICATIONS FOR FURTHER INFORMATION.
2. AIM STREET SIGNS AS DIRECTED BY CONTRACT ADMINISTRATOR.
3. ALL DIMENSIONS ARE IN MILLIMETRES UNLESS OTHERWISE NOTED.

SCALE: N.T.S.

REV.	REVISION DATE	APPROVED

HEADS
OVERHEAD SIGN MOUNTING

ISSUE DATE: SEPTEMBER 2018
APPROVED BY: D. EPA

CITY OF VANCOUVER

STANDARD DETAIL DRAWINGS

ENGINEERING SERVICES - VANCOUVER, B.C.

DRAWING No.

E5.17

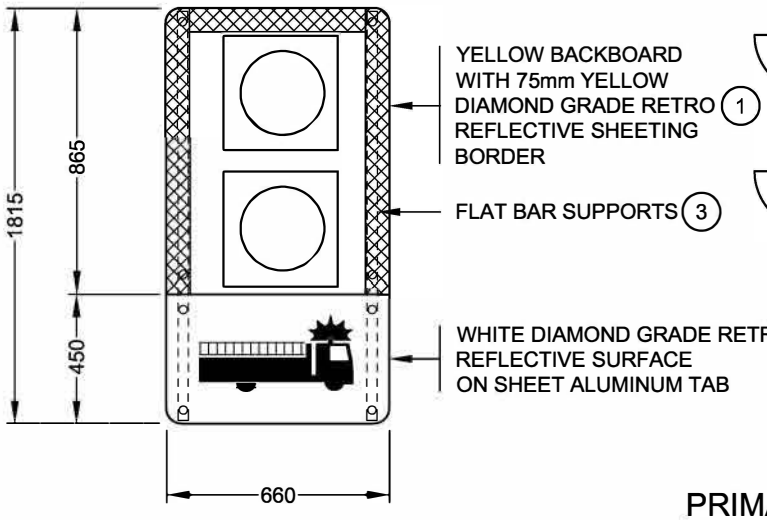

PRIMARY FIRE SIGNAL HEAD

SUPPLEMENTARY TAB SIGN
(ID-22SR OR ID-22SL) AS PER MUTCD

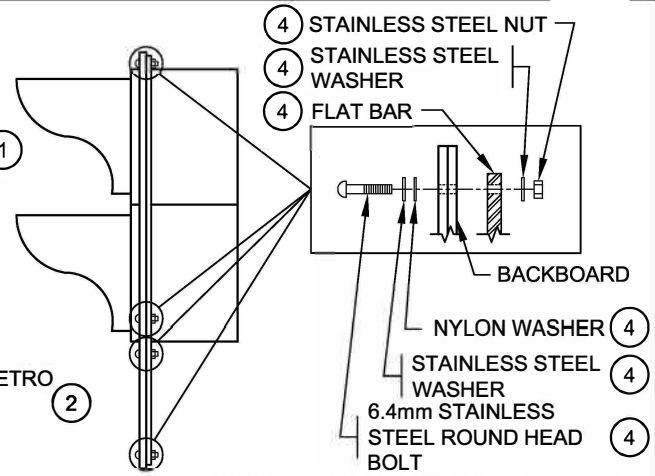

BOLT CONNECTION DETAIL

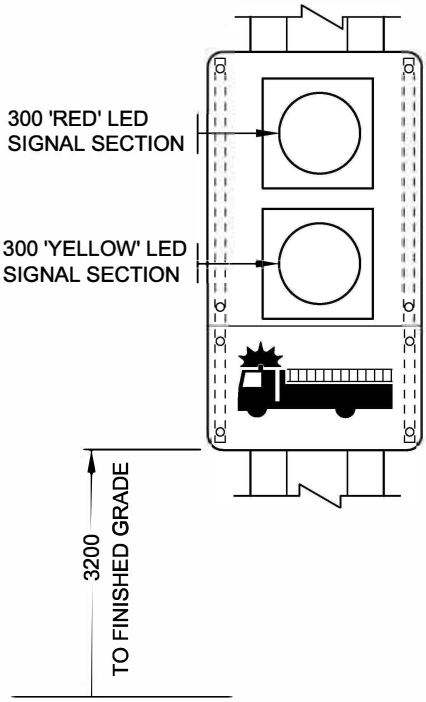

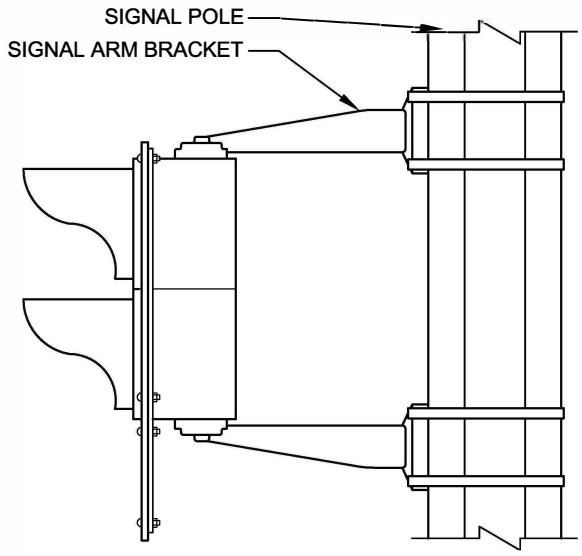

SECONDARY FIRE SIGNAL HEAD MOUNTING

ITEM NO.	QTY	DESCRIPTION
1	1	BACKBOARD
2	1	FIRE SIGNAL SIGN
3	2	1150x30x5 GALVANIZED FLAT BAR
4	8	6.4mmx19.1mm STAINLESS STEEL ROUND HEAD BOLT (WITH FULL THREAD) 2 STAINLESS STEEL WASHERS, STAINLESS STEEL NUT AND NYLON WASHER

NOTES:

1. REFER TO CONTRACT DRAWINGS, MMCD AND CITY CONSTRUCTION SPECIFICATIONS FOR FURTHER INFORMATION.
2. ALL DIMENSIONS ARE IN MILLIMETRES UNLESS OTHERWISE NOTED.

SCALE: N.T.S.

REV.	REVISION DATE	APPROVED

HEADS

FIRE SIGNAL SIGNS

ISSUE DATE: SEPTEMBER 2018

APPROVED BY: D. EPA

CITY OF VANCOUVER	STANDARD DETAIL DRAWINGS ENGINEERING SERVICES - VANCOUVER, B.C.	DRAWING No. E5.18A

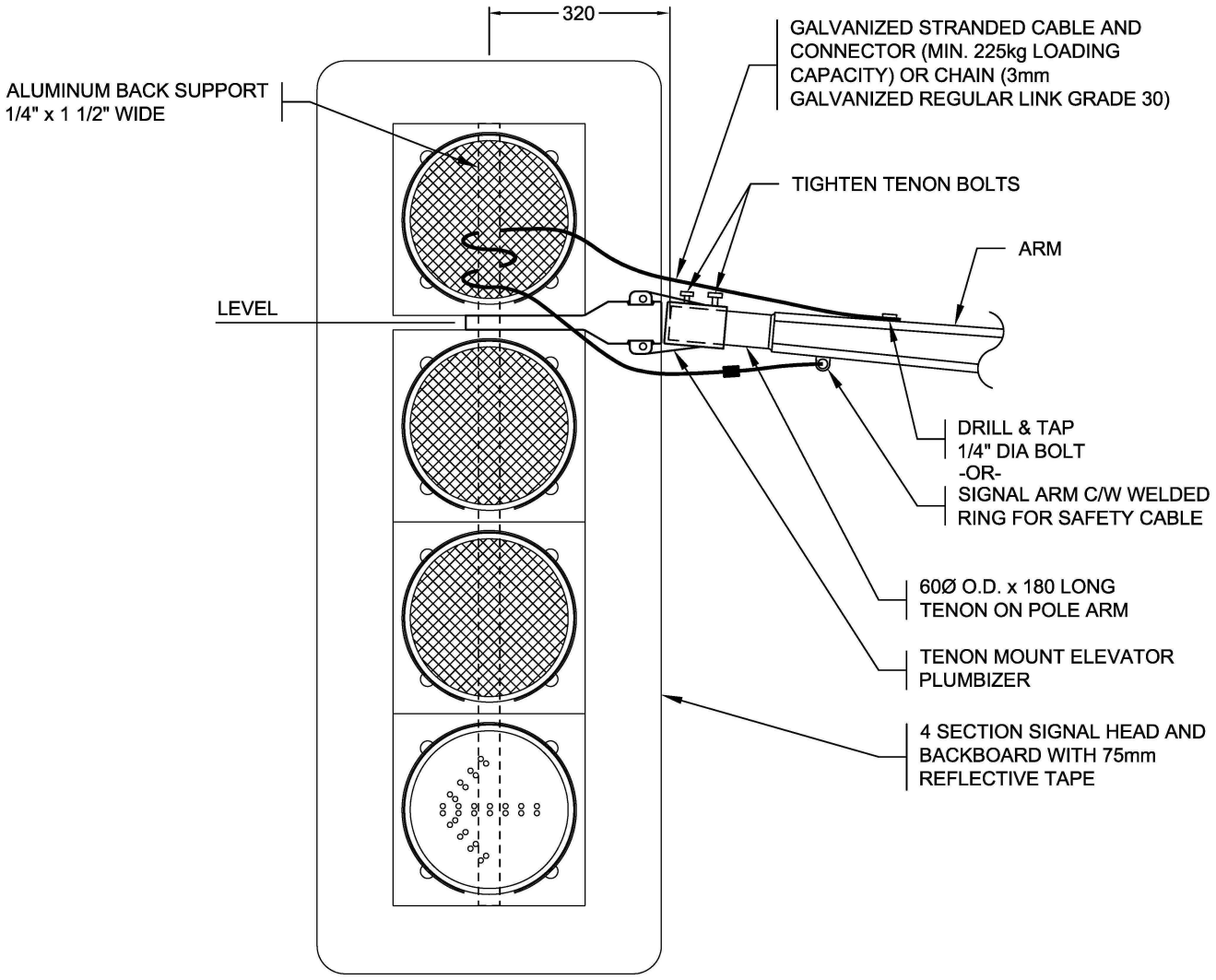

ELEVATION

SCALE: N.T.S.

REV.	REVISION DATE	APPROVED

HEADS

TENON MOUNT ELEVATOR PLUMBIZER INSTALLATION DETAILS

ISSUE DATE: SEPTEMBER 2018

APPROVED BY: D. EPA

CITY OF VANCOUVER

STANDARD DETAIL DRAWINGS

ENGINEERING SERVICES - VANCOUVER, B.C.

DRAWING No.

E5.18B

ITEM NO.	QTY	DESCRIPTION
1	1	PLUMBIZER BRACKET
2	2	3/4"Ø x 1" STAINLESS STEEL BOLT
3	2	3/4"Ø x 1 3/4" STAINLESS STEEL BOLT, LOCK WASHER AND FLAT WASHER
4	1	3 - 1/2"Ø x 3 1/2" LONG STAINLESS STEEL BOLT AND CAGE
5	2	RUBBER GASKET
6	1	9.5mm THICK CAST ALUMINUM RETAINING WASHER
7	3	STAINLESS STEEL LOCK WASHER
8	3	1/2" STAINLESS STEEL NYLOCK NUTS

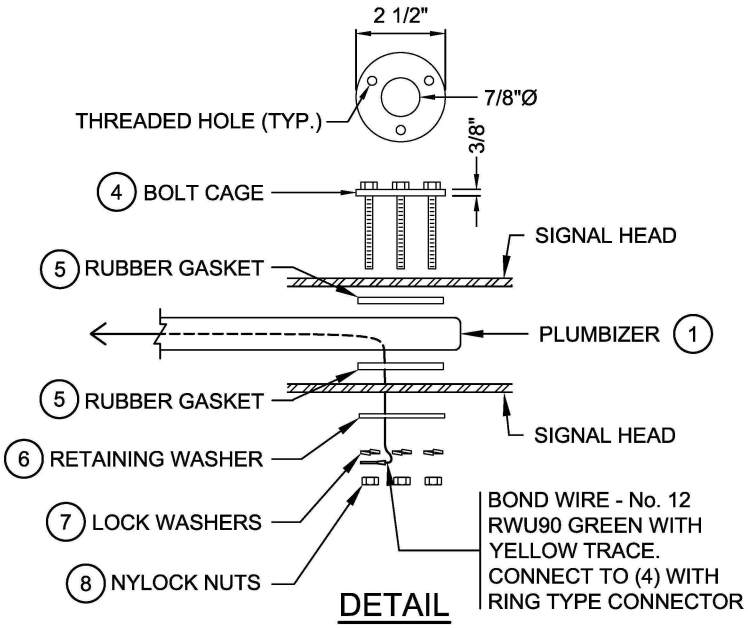

DETAIL

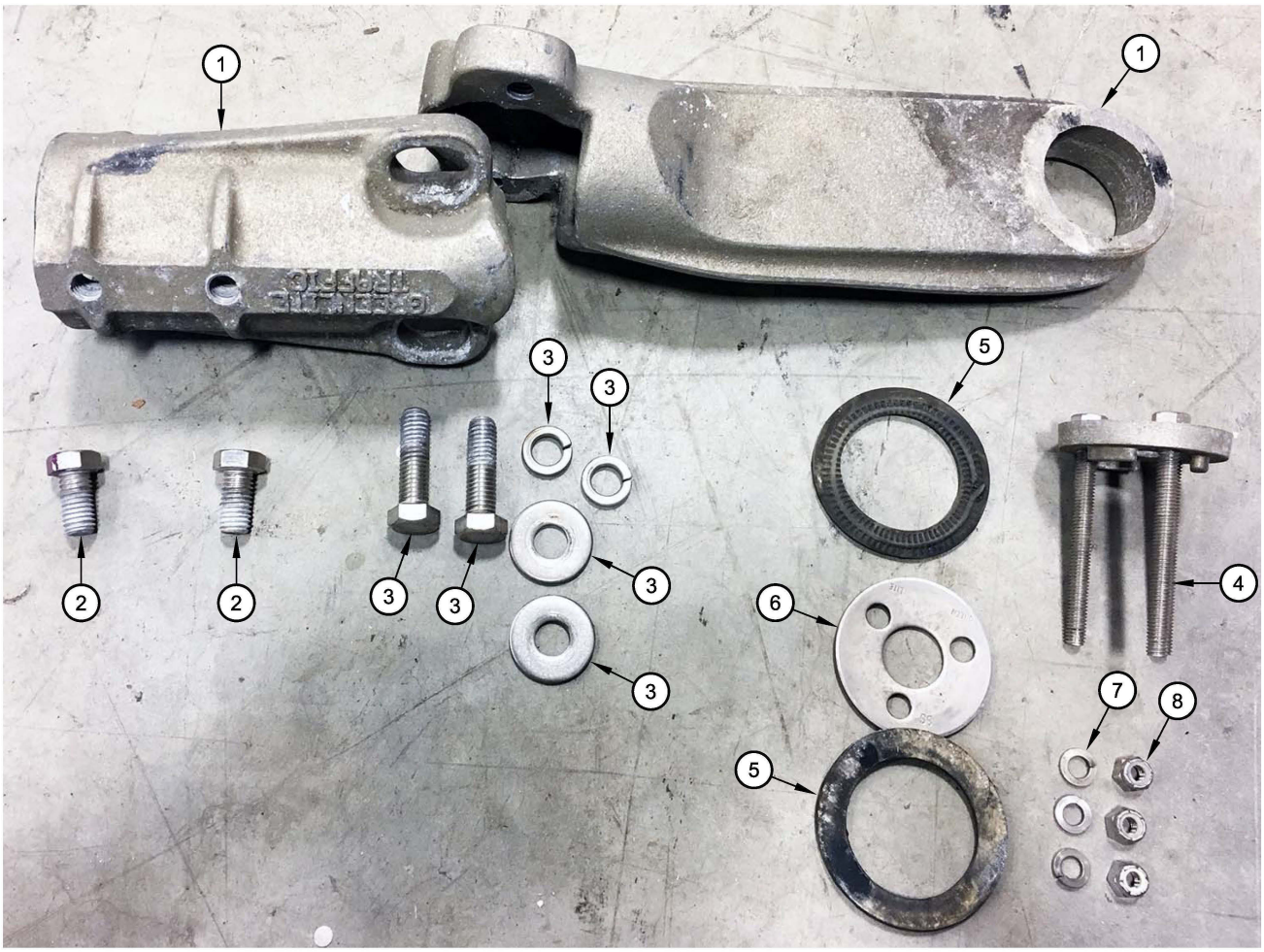

SCALE: N.T.S.

REV.	REVISION DATE	APPROVED

HEADS

TENON MOUNT ELEVATOR PLUMBIZER INSTALLATION DETAILS

ISSUE DATE: SEPTEMBER 2018

APPROVED BY: D. EPA

CITY OF VANCOUVER

STANDARD DETAIL DRAWINGS

ENGINEERING SERVICES - VANCOUVER, B.C.

DRAWING No.

E7.7

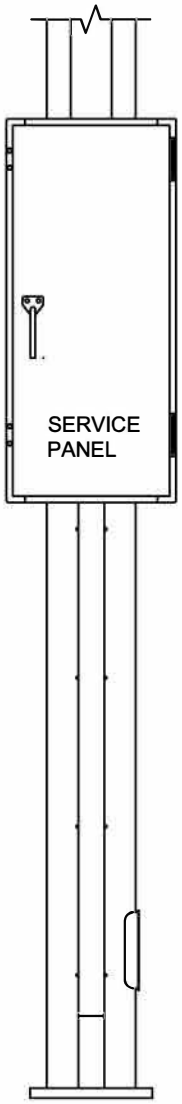

FRONT VIEW

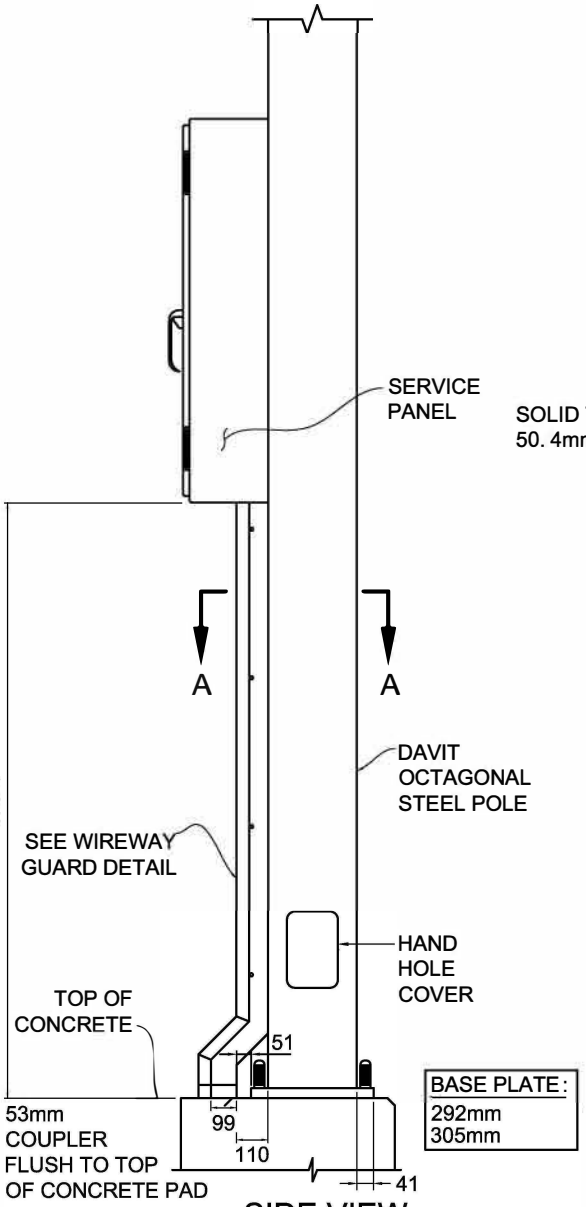

SIDE VIEW

WIREWAY GUARD PLAN VIEW

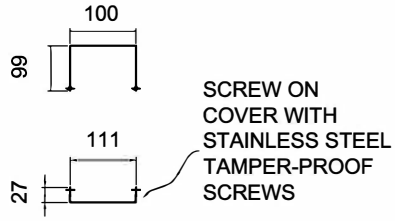

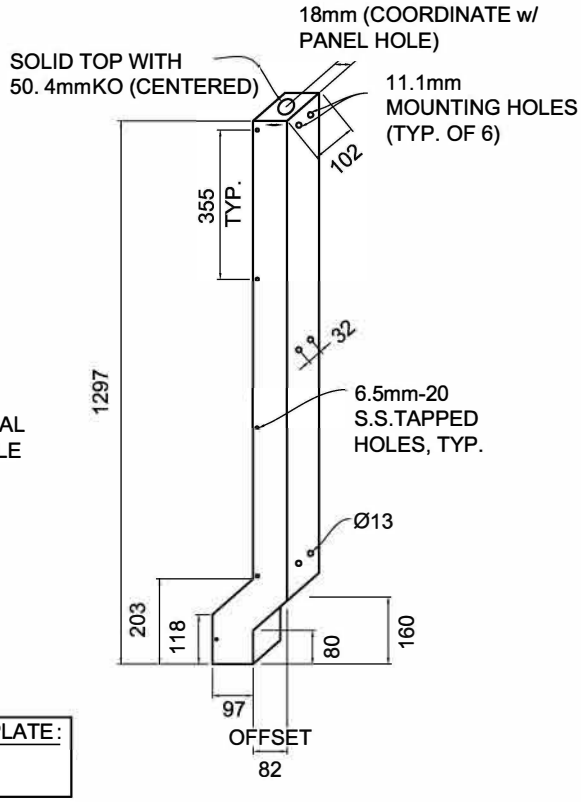

WIREWAY GUARD DETAIL

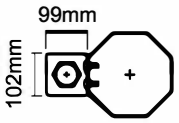

SECTION A-A

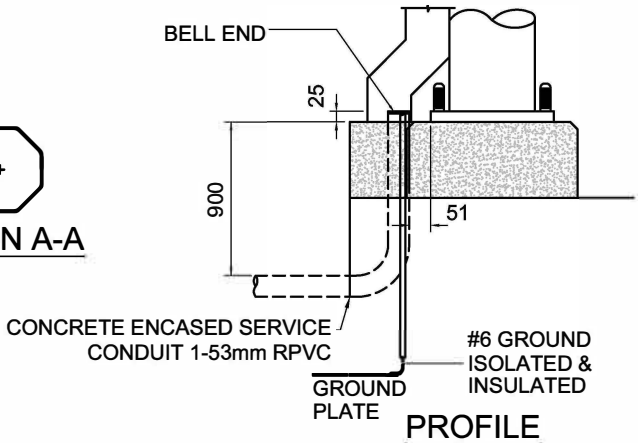

PROFILE

NOTES:

1. REFER TO CONTRACT DRAWINGS, MMCD AND CITY CONSTRUCTION SPECIFICATIONS FOR FURTHER INFORMATION.
2. MATERIAL: 12 GA STAINLESS STEEL.
3. FRONT COVER TO BE CLOSED BY STAINLESS STEEL TAMPER PROOF SCREWS.
4. POWDER COATED COV GREEN RAL 6005 (UNLESS OTHERWISE SPECIFIED).
5. ALL DIMENSIONS ARE IN MILLIMETRES UNLESS OTHERWISE NOTED.

SCALE: N.T.S.

REV.	REVISION DATE	APPROVED

SERVICE PANELS

POLE MOUNT SERVICE PANEL AND WIREWAY DETAIL

ISSUE DATE: SEPTEMBER 2018

APPROVED BY: D. EPA

CITY OF VANCOUVER

STANDARD DETAIL DRAWINGS

ENGINEERING SERVICES - VANCOUVER, B.C.

DRAWING No.

E7.8A

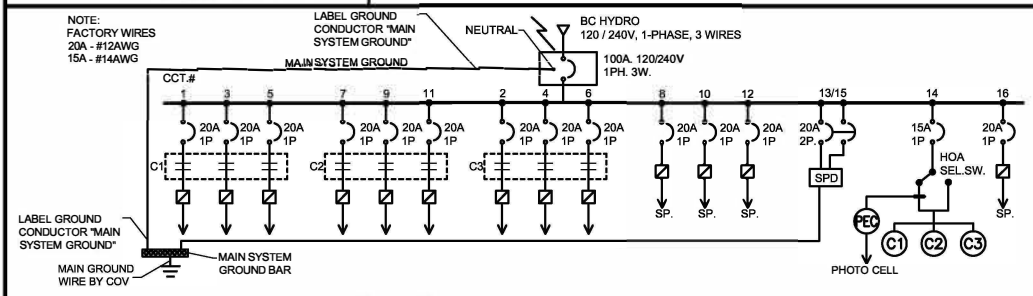

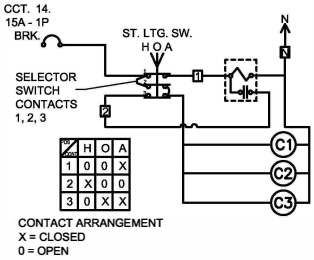

SINGLE-LINE DIAGRAM

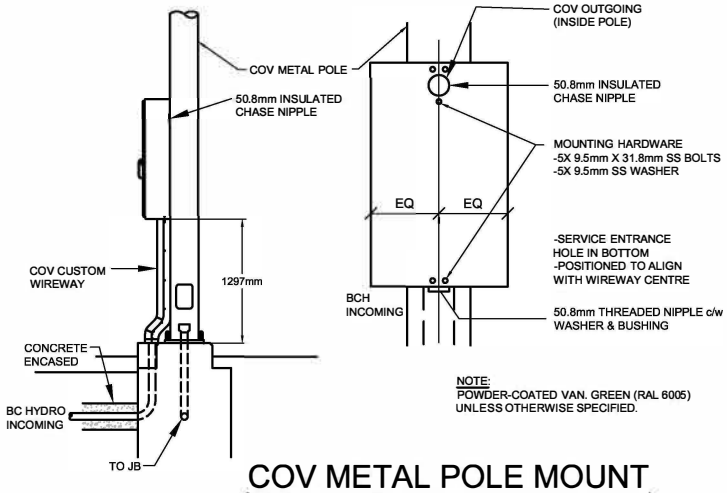

NOTE:
POWDER-COATED VAN. GREEN (RAL 6005) UNLESS OTHERWISE SPECIFIED.

COV METAL POLE MOUNT DESIGN DETAIL "A"

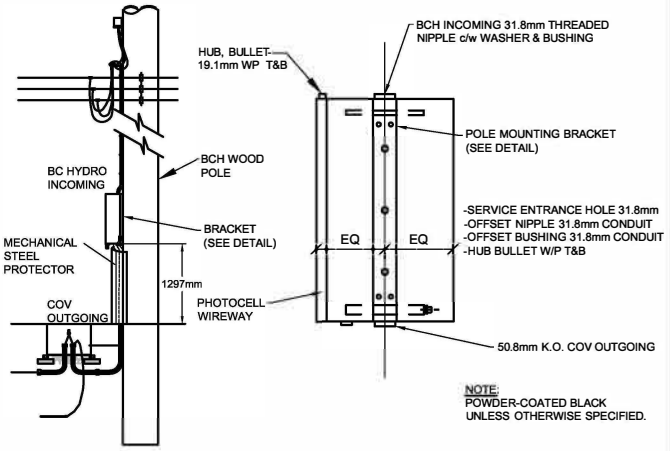

NOTE:
POWDER-COATED BLACK UNLESS OTHERWISE SPECIFIED.

WOOD POLE MOUNT DESIGN DETAIL "B"

ITEM NO.	QTY	DESCRIPTION
1	1	CSA TYPE 3R ENCLOSURE - 812.8mm x 304.8mm x 203.2mm
2	1	H.O.A. - IDEC 3 POS. SELECTOR SWITCH #ASD320N c/w EXTRA CONTACT BLOCK - #BST-001
3	16	WEIDMULLER TERMINAL BLOCKS - (9 - #102880 #12 - #2AWG) (3 - #102040 #14 - #6AWG) - (1 - #102030 #18 - #6) (3 - #102020 #20 - #8AWG)
4	1	ILSCO COPPER GROUND BAR - 13 POINT
5	1	ILSCO - ISOLATED NEUTRAL BLOCK - #M8074 (1 - MAIN LUG - 300MCM - #6) (9 - #14 - 2/0) (7 - #14 - #6)
6	3	EATON LIGHTING CONTACTORS - 20A. 3P. 120V. COIL #XTCE012B10A
7	1	ANDVANCE PROTECTION "SPD" - #S50A120V2PN/W10
8	1	SCHNIEDER 100A. 120/240V. 1PH. 3W. COMBINATION LOAD CENTER - 100A. MAIN BREAKER - #CQO116M100C100 (COPPER BUS) - C/W BRANCH BREAKERS. (1- 15A. 1P #QO115) - (13 - 20A. 1P #QO115) (1 - 20A. 2P. #QO220)
9	1	T & B 2" SNAP IN PLASTIC BUSHING - #3215

NOTES:

1. FACTORY PRE-WIRED SERVICE PANEL
2. CSA CERTIFIED
3. TO BE MADE OF 14GA. S/S
4. TO BE POWDER COATED - GREEN - RAL6005
5. REFER TO CONTRACT DRAWINGS, MMCD AND CITY CONSTRUCTION SPECIFICATIONS FOR FURTHER INFORMATION.

SCALE: N.T.S.

REV.	REVISION DATE	APPROVED

SERVICE PANELS

POLE MOUNT SERVICE PANEL 100A, 120/240V, 1 PHASE STREET LIGHTING

ISSUE DATE: SEPTEMBER 2018

APPROVED BY: D. EPA

CITY OF VANCOUVER

STANDARD DETAIL DRAWINGS

ENGINEERING SERVICES - VANCOUVER, B.C.

DRAWING No.

E7.8B

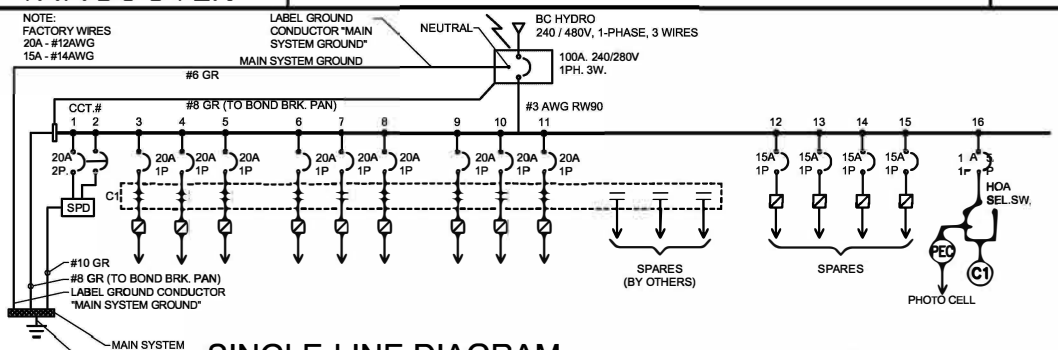

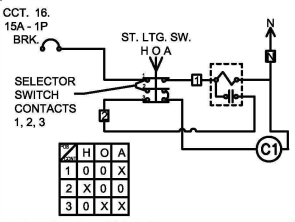

SINGLE-LINE DIAGRAM

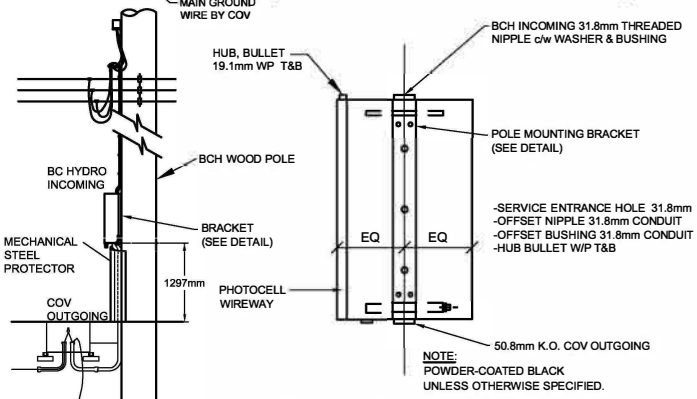

WOOD POLE MOUNT DESIGN DETAIL "B"

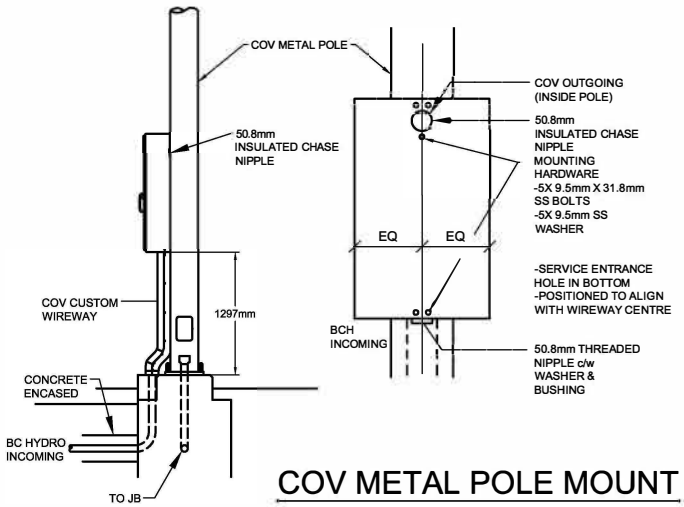

COV METAL POLE MOUNT DESIGN DETAIL "A"

ITEM NO.	QTY	DESCRIPTION (240/480V. PANEL)
1	1	CSA TYPE 3R ENCLOSURE
2	1	19.1mm BULLET HUB - T & B #371 - (PHOTO CELL)
3	1	31.8mm BULLET HUB - T& B #373 (TOP FEED)
4	1	MAIN BREAKER - EATON - 100A. 240/480V. 1PH. 3W. #EHD2100
5	1	240/480V. 1PH. 3W. EATON PANEL - 16CCT COPPER BUS BAR - 1 - Z-SV/UL-16/2P-2TE/12 1 - Z-SV/UL-16/2P-2TE/6 X2 - TERMINALS - #Z-EK/35/UL - C/W BRANCH BREAKERS (X5) - 15A. 1P. #FAZ-C15/1-NA - (X9) - 20A. 1P #FAZ-C20/1-NA - (X1) - 20A. 2P. #FAZ-C20/2-NA
6	1	SPD - 240/480V - #S50A277V2PN/W10
7	1	IDEC - H.O.A. SELECTOR SW. #ASD320N
8	13	WIELAND TERMINAL BLOCKS - X9 - #WKN35 - (#12 - 2) X4 - #WKN10 - (#16 - 6)
9	1	EATON LIGHTING CONTACTOR - #C30CNE2080 (240V) MAX - 12 POLE - SUPPLIED WITH 9 POLES. (X1 - 1 POLE #C320PRP1) & (X4 - 2 - POLE #C320PRP2)
10	3	WIELAND TERMINAL BLOCKS - #WK4 - (#24 - 10) (PHOTO CELL CONTROL WIRE)
11	1	NEUTRAL BLOCK - 225A. RATED - ILSCO #M8142 C/W EXTRA CONNECTION POINTS - EATON #NB108

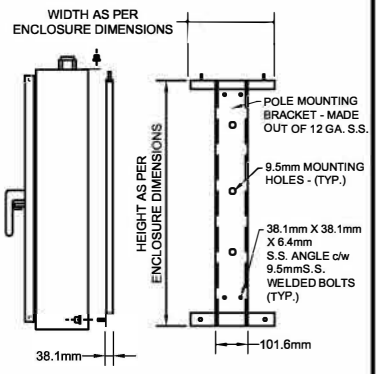

WOOD POLE MOUNT DETAIL NTS

NOTES:

1. FACTORY PRE-WIRED SERVICE PANEL
2. CSA CERTIFIED
3. TO BE MADE OF 14GA. S/S
4. TO BE POWDER COATED - GREEN - RAL6005
5. REFER TO CONTRACT DRAWINGS, MMCD AND CITY CONSTRUCTION SPECIFICATIONS FOR FURTHER INFORMATION.

SCALE: N.T.S.

REV.	REVISION DATE	APPROVED

SERVICE PANELS

POLE MOUNT SERVICE PANEL 100A, 240/480V, 1 PHASE STREET LIGHTING

ISSUE DATE: SEPTEMBER 2018

APPROVED BY: D. EPA

CITY OF VANCOUVER

STANDARD DETAIL DRAWINGS

ENGINEERING SERVICES - VANCOUVER, B.C.

DRAWING No.

E7.8C

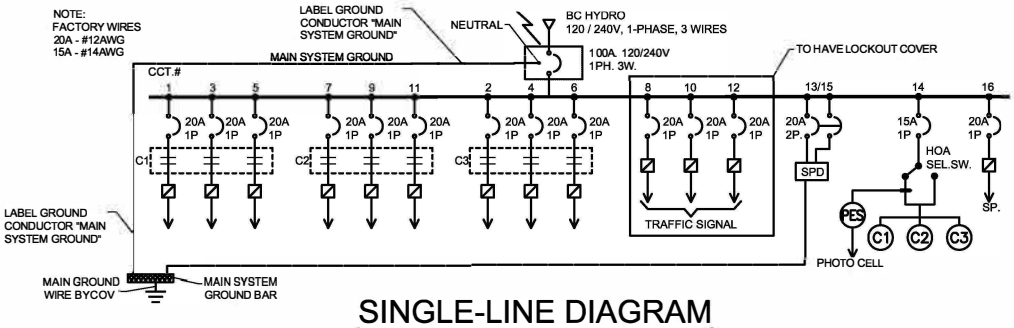

SINGLE-LINE DIAGRAM

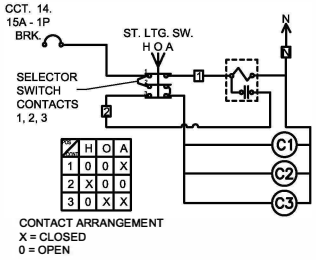

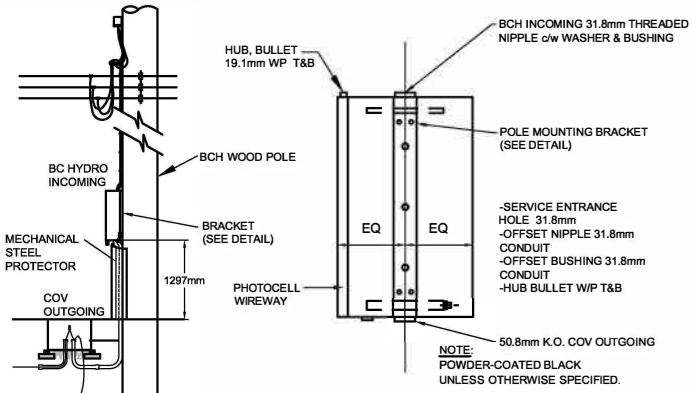

WOOD POLE MOUNT DESIGN DETAIL "B"

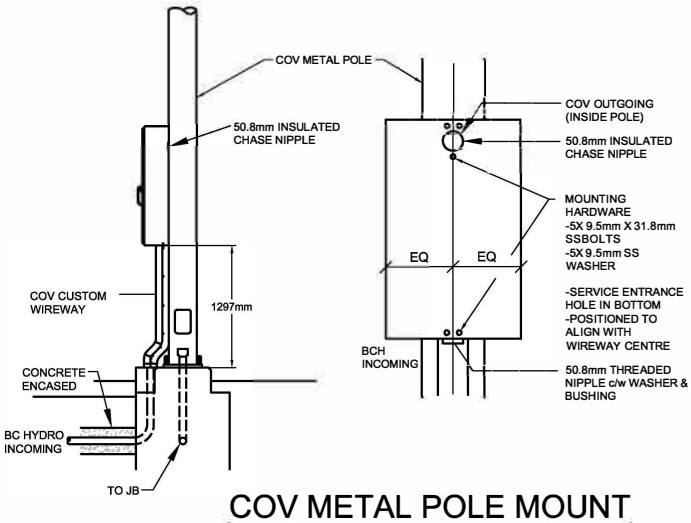

COV METAL POLE MOUNT DESIGN DETAIL "A"

ITEM NO.	QTY	DESCRIPTION
1	1	CSA TYPE 3R ENCLOSURE - 812.8mm x 304.8mm x 203.2mm
2	1	H.O.A. - IDEC 3 POS. SELECTOR SWITCH #ASD320N c/w EXTRA CONTACT BLOCK - #BST-001
3	16	WEIDMULLER TERMINAL BLOCKS - (9 - #102880 #12 - #2AWG) (3 - #102040 #14 - #6AWG) - (1 - #102030 #18 - #6) (3 - #102020 #20 - #8AWG)
4	1	ILSCO COPPER GROUND BAR - 13 POINT
5	1	ILSCO - ISOLATED NEUTRAL BLOCK - #M8074 (1 - MAIN LUG - 300MCM - #6) (6 - #14 - 2/0) (10 - #14 - #6)
6	3	EATON LIGHTING CONTACTORS - 20A. 3P. 120V. COIL #XTCE012B10A
7	1	ANDVANCE PROTECTION "SPD" - #S50A120V2PN/W10
8	1	SCHNIEDER 100A. 120/240V. 1PH. 3W. COMBINATION LOAD CENTER - 100A. MAIN BREAKER - #CQO116M100C100 (COPPER BUS) - C/W BRANCH BREAKERS. (1- 15A. 1P #QO115) - (13 - 20A. 1P #QO115) (1 - 20A. 2P. #QO220)
9	1	T & B 2" SNAP IN PLASTIC BUSHING - #3215

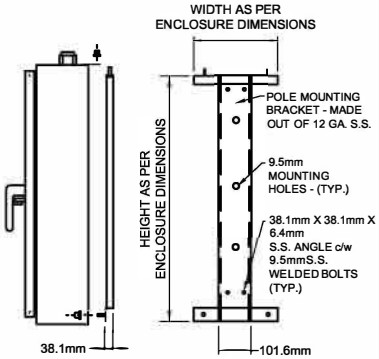

WOOD POLE MOUNT DETAIL NTS

NOTES:

1. FACTORY PRE-WIRED SERVICE PANEL
2. CSA CERTIFIED
3. TO BE MADE OF 14GA. S/S
4. TO BE POWDER COATED - GREEN - RAL6005
5. REFER TO CONTRACT DRAWINGS, MMCD AND CITY CONSTRUCTION SPECIFICATIONS FOR FURTHER INFORMATION.

SCALE: N.T.S.

REV.	REVISION DATE	APPROVED

SERVICE PANELS

POLE MOUNT SERVICE PANEL 100A, 120/240V, 1 PHASE TS/SL COMBO

ISSUE DATE: SEPTEMBER 2018

APPROVED BY: D. EPA

CITY OF VANCOUVER	STANDARD DETAIL DRAWINGS ENGINEERING SERVICES - VANCOUVER, B.C.	DRAWING No. E7.9A

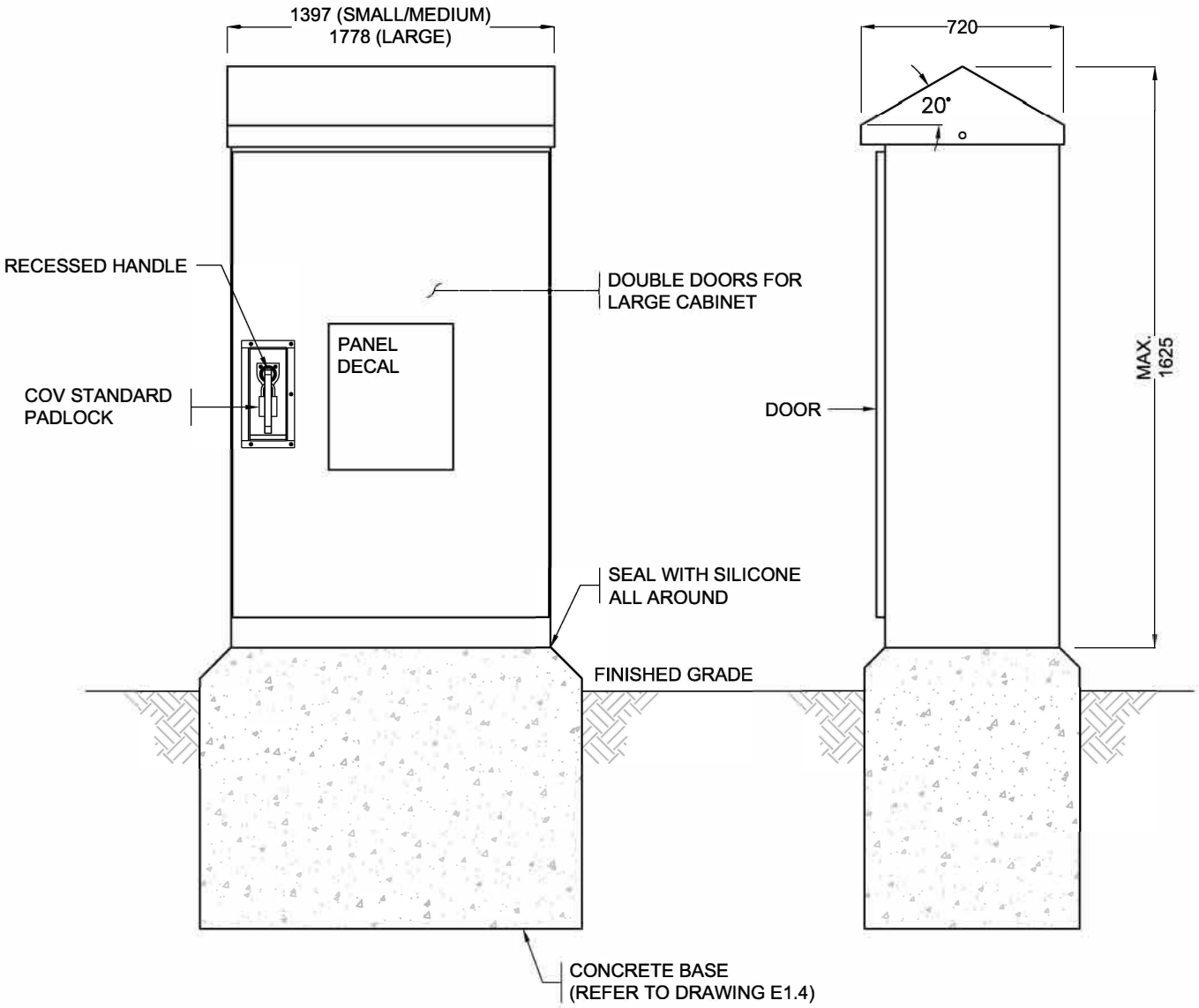

FRONT VIEW

RIGHT SIDE VIEW

NOTES:
1. REFER TO CONTRACT DRAWINGS, MMCD AND CITY CONSTRL/CTION SPECIFICATIONS FOR FURTHER INFORMATION.
2. ALL DIMENSIONS ARE IN MILLIMETRES UNLESS OTHERWISE NOTED.

SCALE: N.T.S.

REV.	REVISION DATE	APPROVED

SERVICE CABINETS
TYPICAL SERVICE KIOSK / CABINET

ISSUE DATE: SEPTEMBER 2018
APPROVED BY: D. EPA

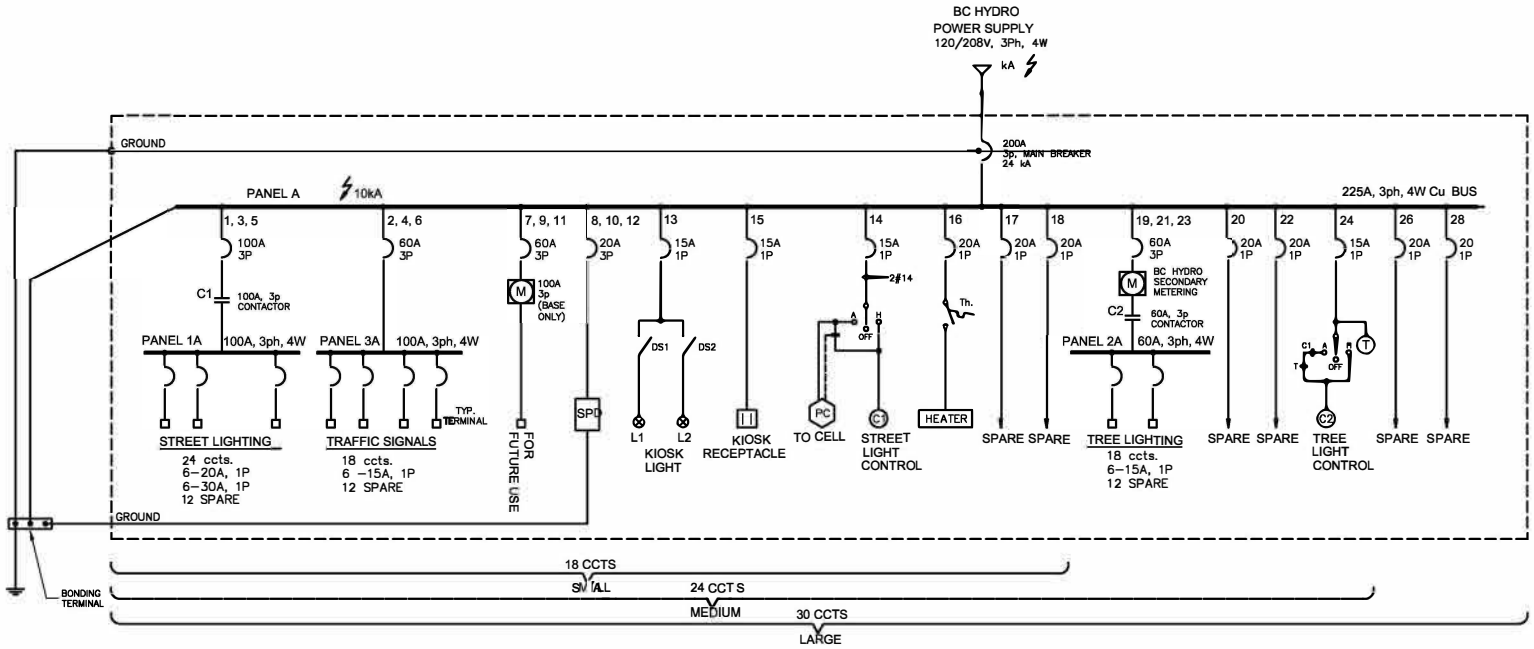

CIRCUIT DIAGRAM FOR THE TYPICAL TIE ON THREE 1p CB's. IF COMMON NEUTRAL IS USED

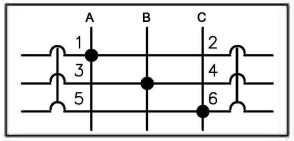

NOTES:

1. REFER TO CONTRACT DRAWINGS, MMCD AND CITY CONSTRUCTION SPECIFICATIONS SECTION 26 56 02S FOR FURTHER INFORMATION.
2. THREE 1P CB's TIED TOGETHER ON 1 PH CIRCUITS USING THE SAME NEUTRAL.

SCALE: N.T.S.

CITY OF VANCOUVER

STANDARD DETAIL DRAWINGS
ENGINEERING SERVICES - VANCOUVER, B.C.

DRAWING No.
E7.9B

REV.	REVISION DATE	APPROVED

SERVICE CABINETS

SERVICE CABINET STANDARD 120/208V 3Ø, 4W STREET LIGHTING / TRAFFIC SIGNAL

ISSUE DATE: SEPTEMBER 2018

APPROVED BY: D. EPA

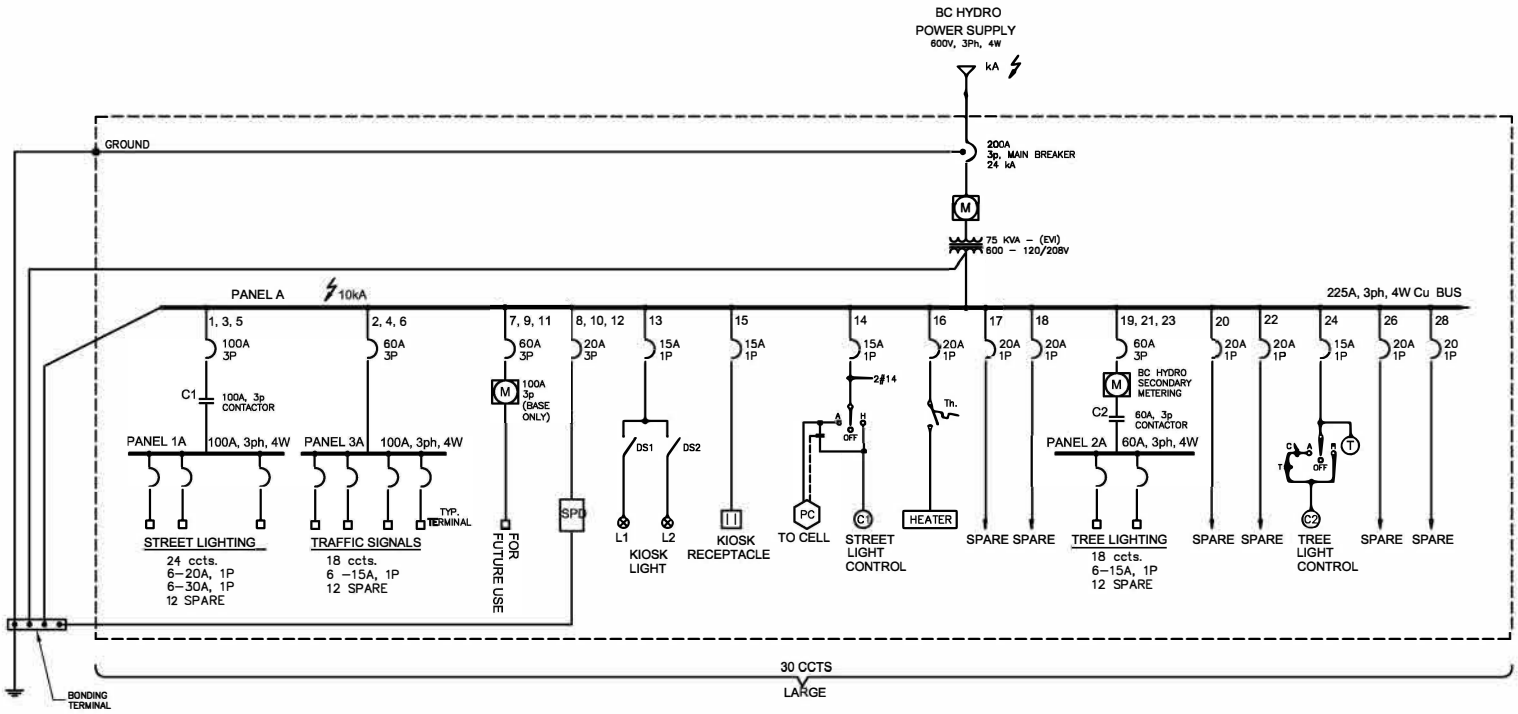

CIRCUIT DIAGRAM FOR THE TYPICAL TIE ON THREE 1p CB's. IF COMMON NEUTRAL IS USED

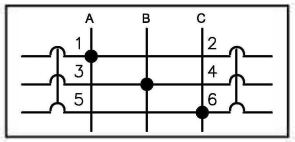

NOTES:

1. REFER TO CONTRACT DRAWINGS, MMCD AND CITY CONSTRUCTION SPECIFICATIONS SECTION 26 56 02S FOR FURTHER INFORMATION.
2. THREE 1P CB's TIED TOGETHER ON 1 PH CIRCUITS USING THE SAME NEUTRAL.

SCALE: N.T.S.

CITY OF VANCOUVER

STANDARD DETAIL DRAWINGS
ENGINEERING SERVICES - VANCOUVER, B.C.

DRAWING No.
E7.9C

REV.	REVISION DATE	APPROVED

SERVICE CABINETS
SERVICE KIOSK STANDARD 600V 120/208V 3Ø, 4W

ISSUE DATE: SEPTEMBER 2018
APPROVED BY: D. EPA

CITY OF VANCOUVER

STANDARD DETAIL DRAWINGS
ENGINEERING SERVICES - VANCOUVER, B.C.

DRAWING No.
E7.13

TRAFFIC SIGNAL WIRE CHART

PHASE AND CROSSWALKS (CROSSWALKS DESIGNATED BY PHYSICAL LOCATION)	SIGNAL HEAD	FIELD CONDUCTOR	25c CABLE (INDIVIDUAL CONDUCTOR REQUIRED, PER PHASE & CROSSWALK)
NORTH BOUND PHASE	RED	RED	RED
	AMBER	YELLOW	ORANGE
	GREEN	GREEN	GREEN
SOUTH BOUND PHASE	RED	RED	RED
	AMBER	YELLOW	ORANGE
	GREEN	GREEN	GREEN
EAST BOUND PHASE	RED	RED	BLK/RED T
	AMBER	ORANGE	ORANGE/RED T
	GREEN	BLUE	BLUE
WEST BOUND PHASE	RED	RED	BLK/RED T
	AMBER	ORANGE	ORANGE/RED T
	GREEN	BLUE	BLUE
NORTH BOUND LEFT TURN PHASE	RED	RED	RED/WHITE T
	AMBER	ORANGE	WHITE/RED T
	GREEN	BLUE	BLUE/BLK T
SOUTH BOUND LEFT TURN PHASE	RED	RED	RED/WHITE T
	AMBER	ORANGE	WHITE/RED T
	GREEN	BLUE	BLUE/BLK T
EAST BOUND LEFT TURN PHASE	RED	RED	BLUE/RED T
	AMBER	YELLOW	ORANGE/BLK T
	GREEN	GREEN	GRN/WHITE T
WEST BOUND LEFT TURN PHASE	RED	RED	BLUE/RED T
	AMBER	YELLOW	ORANGE/BLK T
	GREEN	GREEN	GRN/WHITE T
NORTH CROSSWALK	WALK	YELLOW	BLUE/WHITE T
	DON'T WALK	BLUE	RED/BLK T
SOUTH CROSSWALK	WALK	YELLOW	BLUE/WHITE T
	DON'T WALK	BLUE	RED/BLK T
EAST CROSSWALK	WALK	ORANGE	WHITE/BLK T
	DON'T WALK	BROWN	GREEN/BLK T
WEST CROSSWALK	WALK	ORANGE	WHITE/BLK T
	DON'T WALK	BROWN	GREEN/BLK T
AUDIBLE PEDESTRIAN INHIBITS	NORTH CROSSWALK	BLACK	BLK/GRN T
	SOUTH CROSSWALK	BLACK	WHITE/GRN T
	EAST CROSSWALK	BLACK	ORANGE/GRN T
	WEST CROSSWALK	BLACK	RED/BLUE T
SPARE CONDUCTOR	X	X	GREEN/ORG T
AC COMMON / NEUTRAL	ALL	WHITE	WHITE
BOND CONDUCTOR	ALL	#12AWG RWU90 GREEN/YELLOW T	

PEDESTRIAN & CYCLIST BUTTONS (CROSSWALKS DESIGNATED BY PHYSICAL LOCATION)	BUTTONS	FIELD CONDUCTOR	25c CABLE (INDIVIDUAL CONDUCTOR REQUIRED, PER PEDESTRIAN CROSSWALK & CYCLIST DIRECTION)
PEDESTRIAN BUTTON, NORTH CROSSWALK	DC PLUS	BLACK	BLACK
PEDESTRIAN BUTTON, SOUTH CROSSWALK	DC PLUS	BLACK	BLACK
PEDESTRIAN BUTTON, EAST CROSSWALK	DC PLUS	BLACK	BLACK
PEDESTRIAN BUTTON, WEST CROSSWALK	DC PLUS	BLACK	BLACK
CYCLIST BUTTON, NORTH BOUND	DC PLUS	YELLOW	RED/GRN T
CYCLIST BUTTON, SOUTH BOUND	DC PLUS	YELLOW	RED/GRN T
CYCLIST BUTTON, EAST BOUND	DC PLUS	YELLOW	RED/GRN T
CYCLIST BUTTON, WEST BOUND	DC PLUS	YELLOW	RED/GRN T
BUTTON COMMON / RETURN	DC COMMON	WHITE	BLK/WHITE T
APS Intellicross (Novax)	APS PEDESTRIAN BUTTON CIRCUIT	AS PER PEDESTRIAN BUTTON FIELD CONDUCTOR DESIGNATIONS	AS PER PEDESTRIAN BUTTON 25c CABLE CONDUCTOR DESIGNATIONS
	PIM TO ASSOCIATED APS BUTTON STATION	6c 18 AWG BELDEN CABLE (BLACK/RED/BLUE/ORANGE /YELLOW/BROWN)	
	BOND CONDUCTOR	#12AWG RWU90 GREEN/YELLOW T	
APS iNavigator (Polara)	APS PEDESTRIAN BUTTON CIRCUIT	AS PER PEDESTRIAN BUTTON FIELD CONDUCTOR DESIGNATIONS	AS PER PEDESTRIAN BUTTON 25c CABLE CONDUCTOR DESIGNATIONS

T-TRACE
APS-ACCESSIBLE PEDESTRIAN SIGNAL

T.S.M.S. TIGER TAILS

NORTH	BLUE
SOUTH	ORANGE
EAST	BROWN
WEST	GREEN
CONTROL	GREY

NOTES:
1. REFER TO CONTRACT DRAWINGS, MMCD AND CITY CONSTRUCTION SPECIFICATIONS FOR FURTHER INFORMATION.
2. CABLE TO BE POLYETHYLENE INSULATED POLYVINYL CHLORIDE JACKETED, BLACK, RATED AT 600 VOLTS.
3. CONDUCTORS TO BE No.14 AWG STRANDED.
4. REFERENCE TO CSA 22.2 - No. 239-97, IMSA SPEC. 19-1.

REV.	REVISION DATE	APPROVED

WIRING
25 CONDUCTOR SIGNAL CABLE COLOUR CODING

ISSUE DATE: SEPTEMBER 2018
APPROVED BY: D. EPA

CITY OF VANCOUVER	STANDARD DETAIL DRAWINGS ENGINEERING SERVICES - VANCOUVER, B.C.	DRAWING No. E7.19

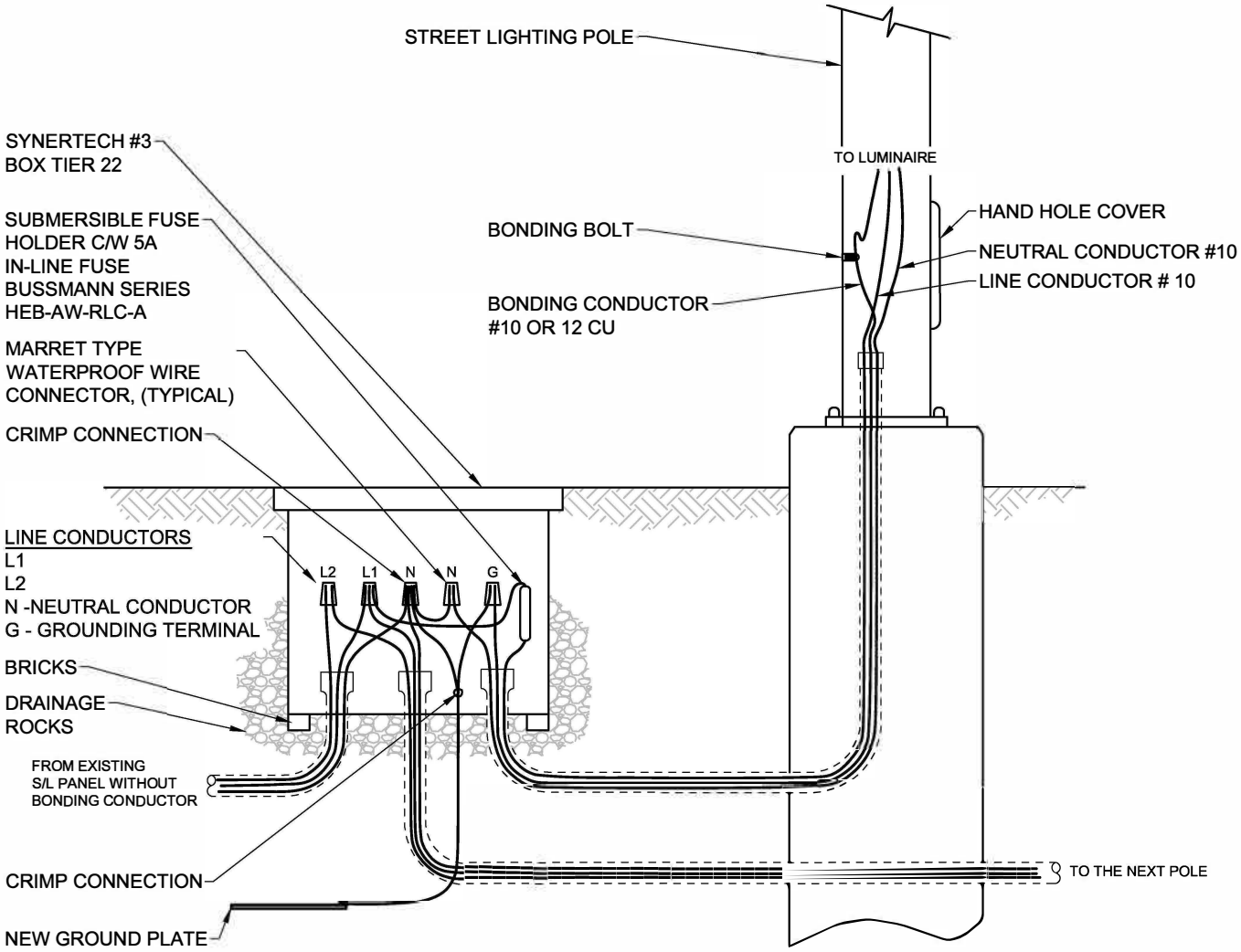

NOTE:
1. REFER TO CONTRACT DRAWINGS, MMCD AND CITY CONSTRUCTION SPECIFICATIONS FOR FURTHER INFORMATION.

SCALE: N.T.S.

REV.	REVISION DATE	APPROVED	WIRING MISSING BONDING CONDUCTOR MITIGATION INSTALLATION	ISSUE DATE: SEPTEMBER 2018 APPROVED BY: D. EPA

CITY OF VANCOUVER | Engineering Services

STANDARD DETAIL DRAWINGS

ENGINEERING SERVICES - VANCOUVER, B.C.

DRAWING No.

E7.20

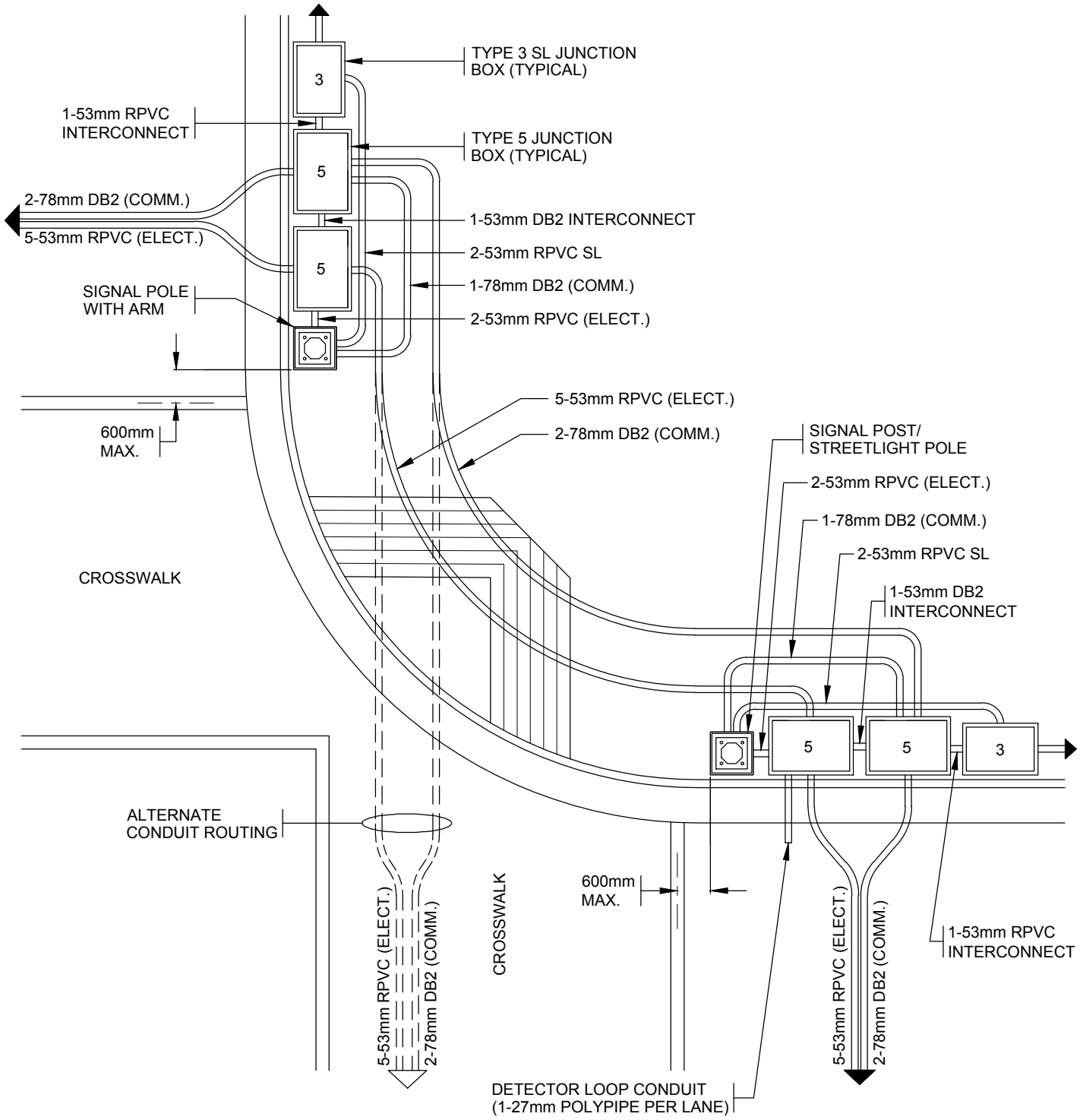

NOTES:

1. MINIMUM NUMBER AND SIZE OF COMM. CONDUIT FOR ROAD CROSSINGS AND RADII VARY AS REQUIRED BY THE CITY.
2. JB PLACEMENT IS DIAGRAMATIC ONLY. JB IS PREFERED TO BE INSTALLED AT THE BACK OF WALK IF SPACE PERMITS.

SCALE: N.T.S.

REV.	REVISION DATE	APPROVED
1	2019-04-29	D. EPA

POLE AND JUNCTION BOX PLACEMENT

ISSUE DATE: APRIL 2019

APPROVED BY: D. EPA

CITY OF VANCOUVER	STANDARD DETAIL DRAWINGS ENGINEERING SERVICES - VANCOUVER, B.C.	DRAWING No. E7.21

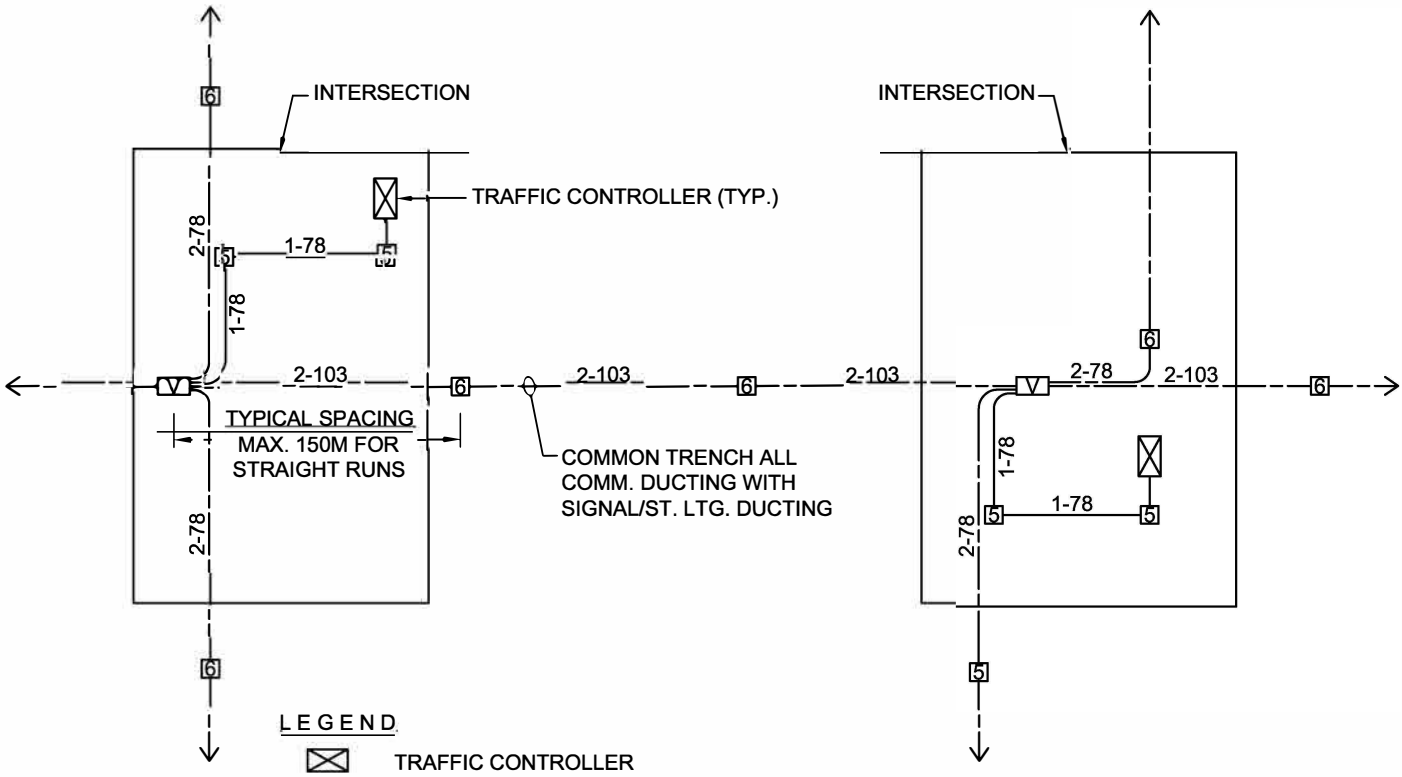

LEGEND

⊠	TRAFFIC CONTROLLER
V	TYPE 243 COMM. VAULT (MMCD E2.5 & E2.6)
5	TYPE 5 JUNCTION BOX
2-103	MAIN TRUNK 2-103 DB2 MIN. (NUMBERS DENOTE QUANTITY AND SIZE)
1-53	1-53MM RPVC (ORANGE). (NUMBERS DENOTE QUANTITY AND SIZE)

COMMUNICATIONS DUCTING

NOTES:
1. SUB TRUNK LINES AND INTERSECTION COMM. DUCT 2-78mm DB2 MIN.
2. MAIN AND SUB TRUNK LINE J.B. IN BETWEEN 243 VAULT SHALL BE No. 6. KEEP 243 VAULT AT INTERSECTION.
3. CONDUIT MUST BE STRAIGHT THROUGH BOX. NO 90° INTO No. 6 OR 243 BOXES FOR ALL 78mm AND 103mm CONDUITS.

SCALE: N.T.S.

REV.	REVISION DATE	APPROVED	WIRING COMMUNICATIONS SYSTEM DUCTING	ISSUE DATE: SEPTEMBER 2018 APPROVED BY: D . EPA

CITY OF VANCOUVER

STANDARD DETAIL DRAWINGS

ENGINEERING SERVICES - VANCOUVER, B.C.

DRAWING No.

E8.2

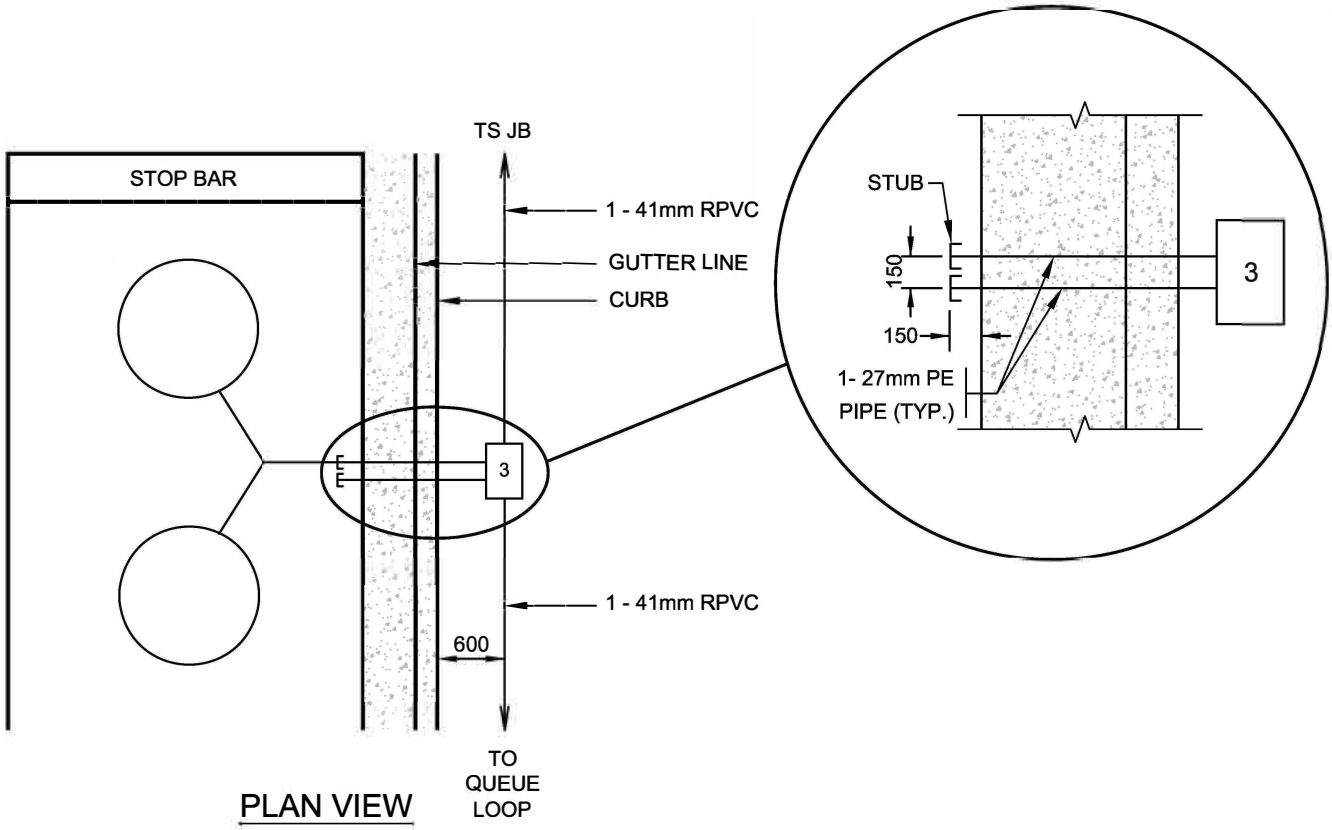

PLAN VIEW

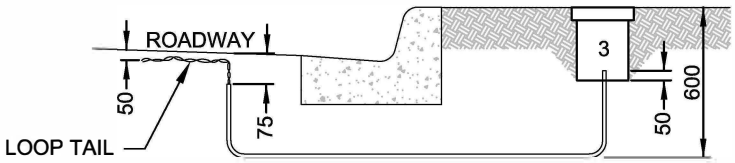

SECTION VIEW

NOTES:

1. REFER TO CONTRACT DRAWINGS, MMCD AND CITY CONSTRUCTION SPECIFICATIONS FOR FURTHER INFORMATION.
2. ONE LOOP STUB PER LANE.
3. ONE SPARE LOOP STUB.
4. ALL DIMENSIONS ARE IN MILLIMETRES UNLESS OTHERWISE NOTED.

SCALE: N.T.S.

REV.	REVISION DATE	APPROVED

DETECTOR LOOPS
LOOP STUB

ISSUE DATE: SEPTEMBER 2018

APPROVED BY: D. EPA

CITY OF VANCOUVER

STANDARD DETAIL DRAWINGS

ENGINEERING SERVICES - VANCOUVER, B.C.

DRAWING No.

E8.7

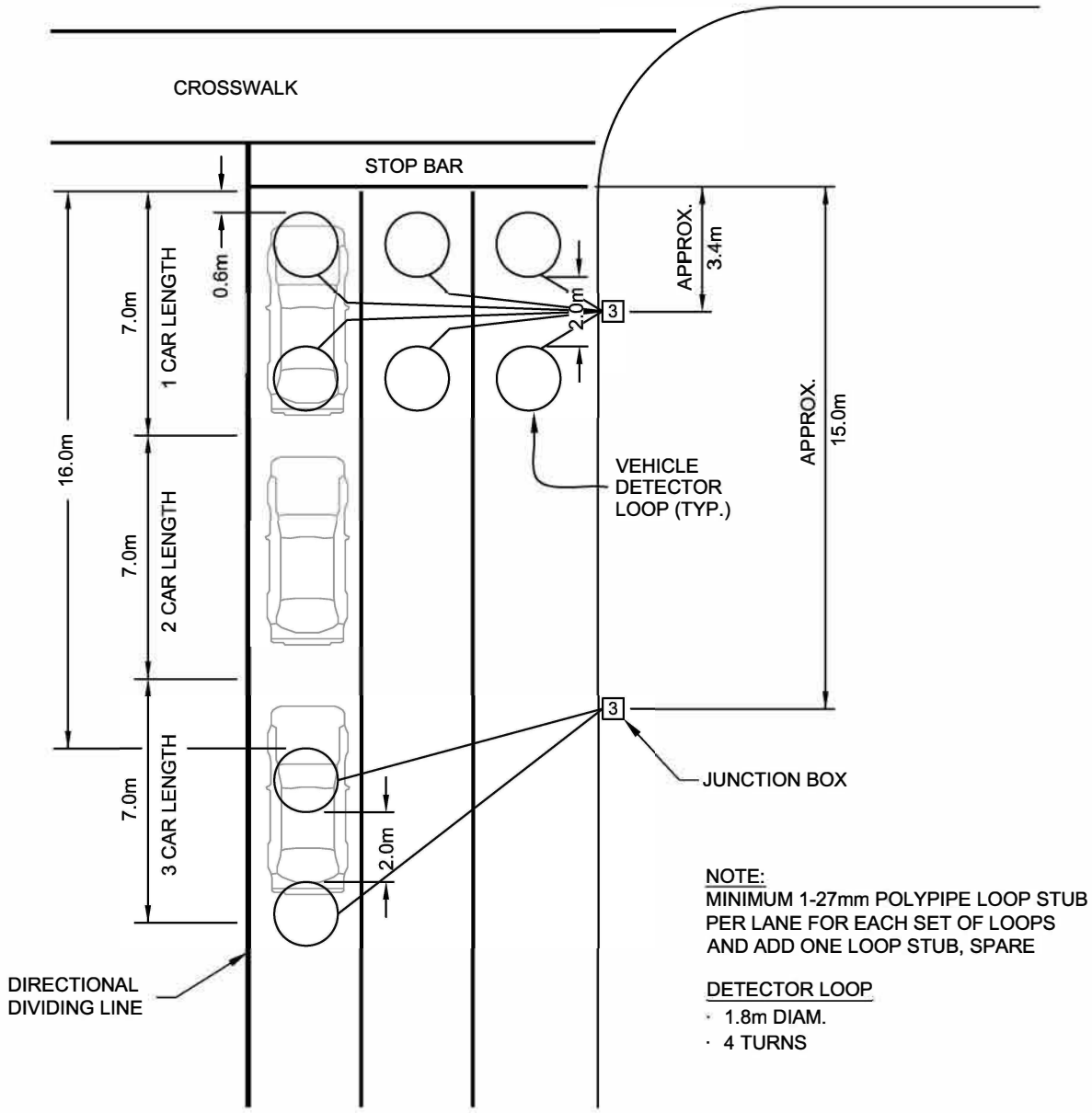

NOTE:
MINIMUM 1-27mm POLYPIPE LOOP STUB PER LANE FOR EACH SET OF LOOPS AND ADD ONE LOOP STUB, SPARE

DETECTOR LOOP
- 1.8m DIAM.
- 4 TURNS

LOOP SET	LANE 1	LANE 2	LANE 3	LANE 4	LANE 5
STOP	BLUE	YELLOW	RED	BROWN	ORANGE
QUEUE	YELLOW	RED	BROWN	ORANGE	BLUE

NOTES:
1. REFER TO CONTRACT DRAWINGS, MMCD AND CITY CONSTRUCTION SPECIFICATIONS FOR FURTHER INFORMATION.
2. WHITE TAPE INDICATES THE BACK LOOP OF THE SET.
3. LANE 1 IS THE CURB (SLOW) LANE INCLUDING WHEN TAILS ARE FROM THE MEDIAN.
4. ALL DIMENSIONS ARE IN MILLIMETRES UNLESS OTHERWISE NOTED.
5. CONSULT CITY FOR LOOP DESIGN WITH CONCRETE MEDIAN, SEPARATED BIKE LANE, LEFT TURN BUS LANE AND INTERSECTION SAFETY CAMERA.

SCALE: N.T.S.

REV.	REVISION DATE	APPROVED

DETECTOR LOOPS

VEHICLE DETECTOR LOOP (TYP.)

ISSUE DATE: SEPTEMBER 2018

APPROVED BY: D. EPA

CITY OF VANCOUVER	STANDARD DETAIL DRAWINGS ENGINEERING SERVICES - VANCOUVER, B.C.	DRAWING No. E8.11

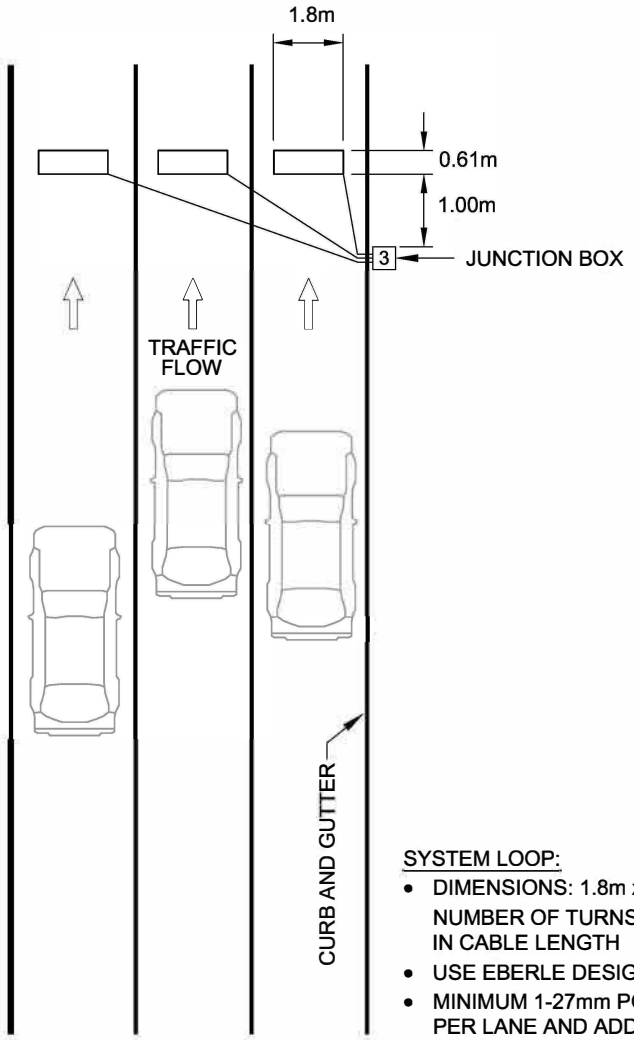

SYSTEM LOOP:

- DIMENSIONS: 1.8m x 0.61m
  NUMBER OF TURNS DETERMINED BY LEAD IN CABLE LENGTH
- USE EBERLE DESIGN LOOP CALCULATOR
- MINIMUM 1-27mm POLYPIPE LOOP STUB PER LANE AND ADD 1 LOOP STUB, SPARE

NOTES:

1. REFER TO CONTRACT DRAWINGS, MMCD AND CITY CONSTRUCTION SPECIFICATIONS FOR FURTHER INFORMATION.
2. CONSULT CITY FOR SYSTEM LOOP LOCATION.
3. ALL DIMENSIONS ARE IN MILLIMETRES UNLESS OTHERWISE NOTED.

SCALE: N.T.S.

REV.	REVISION DATE	APPROVED

DETECTOR LOOPS
SYSTEM LOOP (TYP.)

ISSUE DATE: SEPTEMBER 2018
APPROVED BY: D. EPA

Concrete Base

Sheet Number	Sheet Title	Description
CE0.1	DRAWING INDEX	CONCRETE BASE
CE1.1	CONCRETE BASES	V1 & V2 POURED IN PLACE CONCRETE BASES
CE1.2	CONCRETE BASES	V1 & V2 POURED IN PLACE CONCRETE BASES
CE1.3	CONCRETE BASES	V3, V4 & V5 POURED IN PLACE CONCRETE BASES
CE1.4	CONCRETE BASES	V3, V4 & V5 POURED IN PLACE CONCRETE BASES
CE1.5	CONCRETE BASES	V6 POURED IN PLACE CONCRETE BASE
CE1.6	CONCRETE BASES	V6 POURED IN PLACE CONCRETE BASE
CE1.7	CONCRETE BASES	MAXIMUM POLE BASE LOADING

CITY OF VANCOUVER

STANDARD DETAIL DRAWINGS

ENGINEERING SERVICES - VANCOUVER, B.C.

DRAWING No.

CE1.1

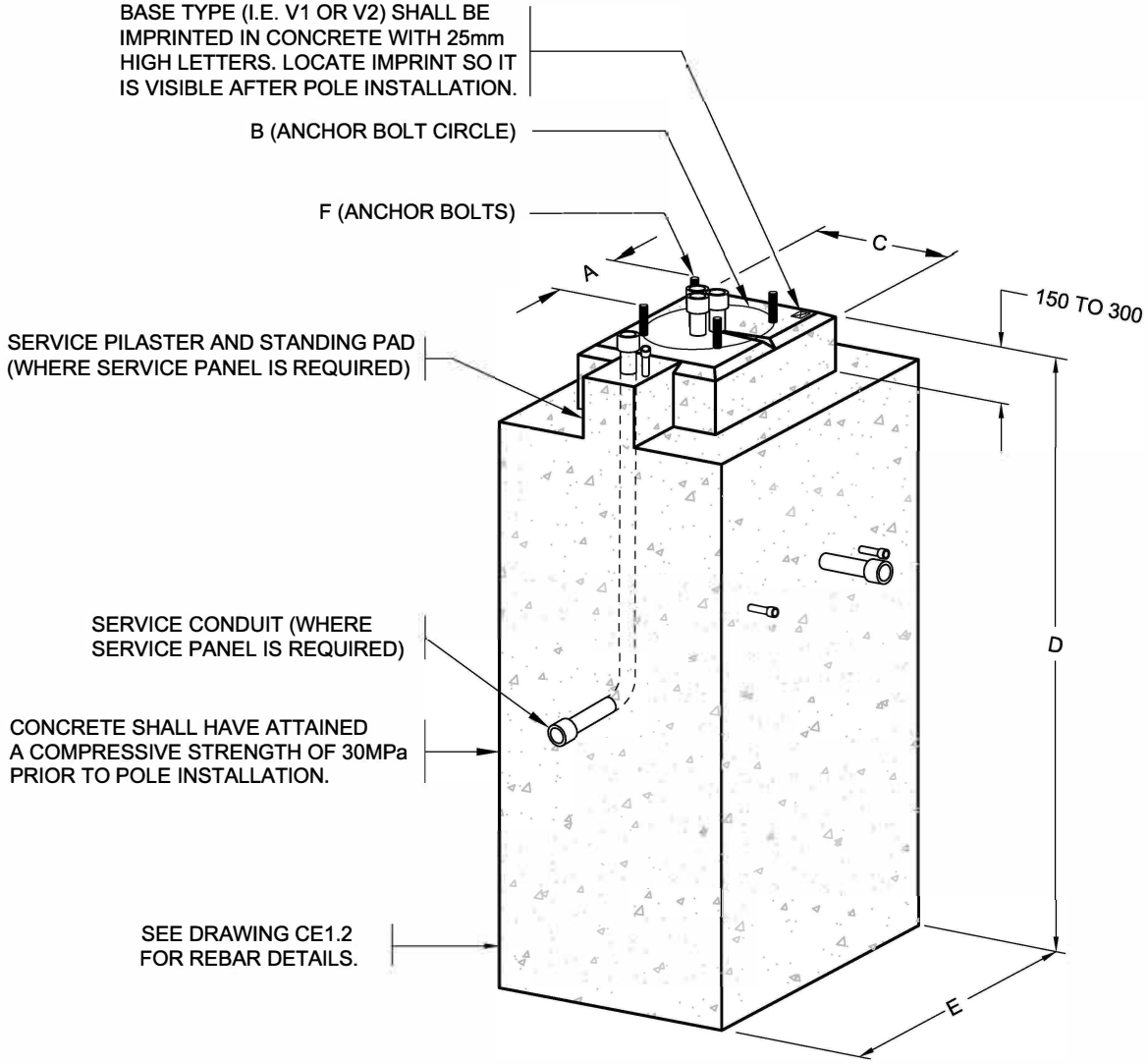

CONCRETE BASE

BASE TYPE	POLE TYPE	A	B	C	D	E	F (ANCHOR BOLTS)	VOLUME OF CONCRETE	APPROXIMATE MASS
V1	3.0m TRAFFIC SIGNAL POLES & TYPE 4A SIGNAL POSTS	197	280	350	1300	600	4-25mm x 915mm LONG AISI / SAE 4140 BOLTS	0.43 m^3	1080 kg
V2	TYPE 5 SHAFTS & 7.5m POST TOP LUMINAIRE POLES & 7.6m, 9.1m DAVIT LUMINAIRE POLES	197	280	350	1800	600	4-25 mm x 915mm LONG AISI / SAE 4140 BOLTS	0.61 m^3	1530 kg

NOTES:

1. REFER TO CONTRACT DRAWINGS, MMCD AND CITY CONSTRUCTION SPECIFICATIONS FOR FURTHER INFORMATION.
2. BASES TO BE IMPRINTED WITH DATE AND BASE TYPE ON TOP OF PEDESTAL.
3. ALL DIMENSIONS ARE IN MILLIMETRES UNLESS OTHERWISE NOTED.

SCALE: N.T.S.

REV.	REVISION DATE	APPROVED

CONCRETE BASES

V1 & V2 POURED IN PLACE CONCRETE BASES

ISSUE DATE: SEPTEMBER 2018

APPROVED BY: D. EPA

CITY OF VANCOUVER

STANDARD DETAIL DRAWINGS

ENGINEERING SERVICES - VANCOUVER, B.C.

DRAWING No.

CE1.2

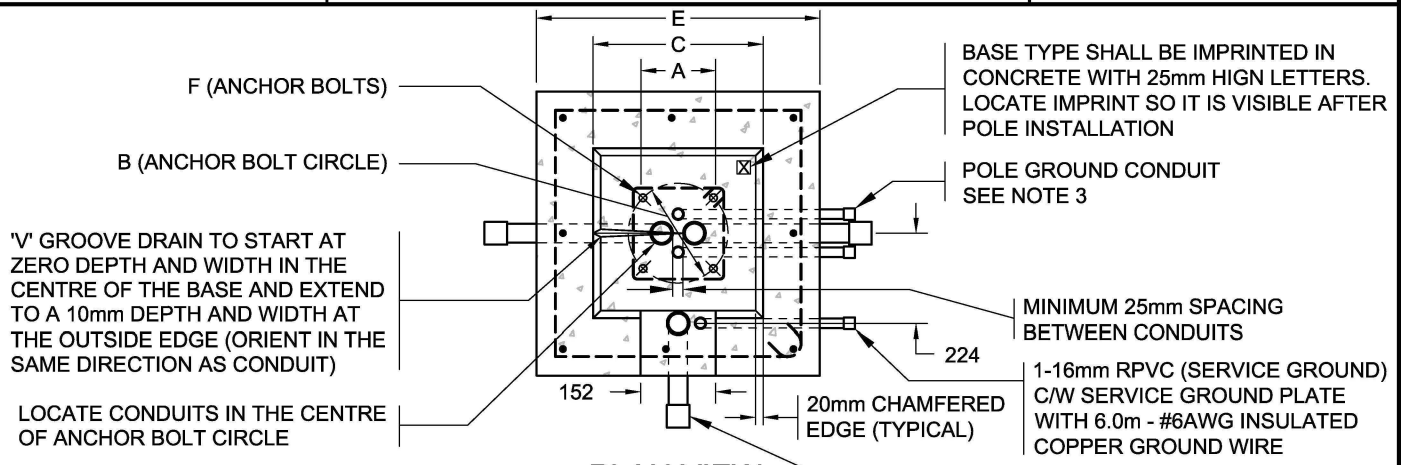

PLAN VIEW

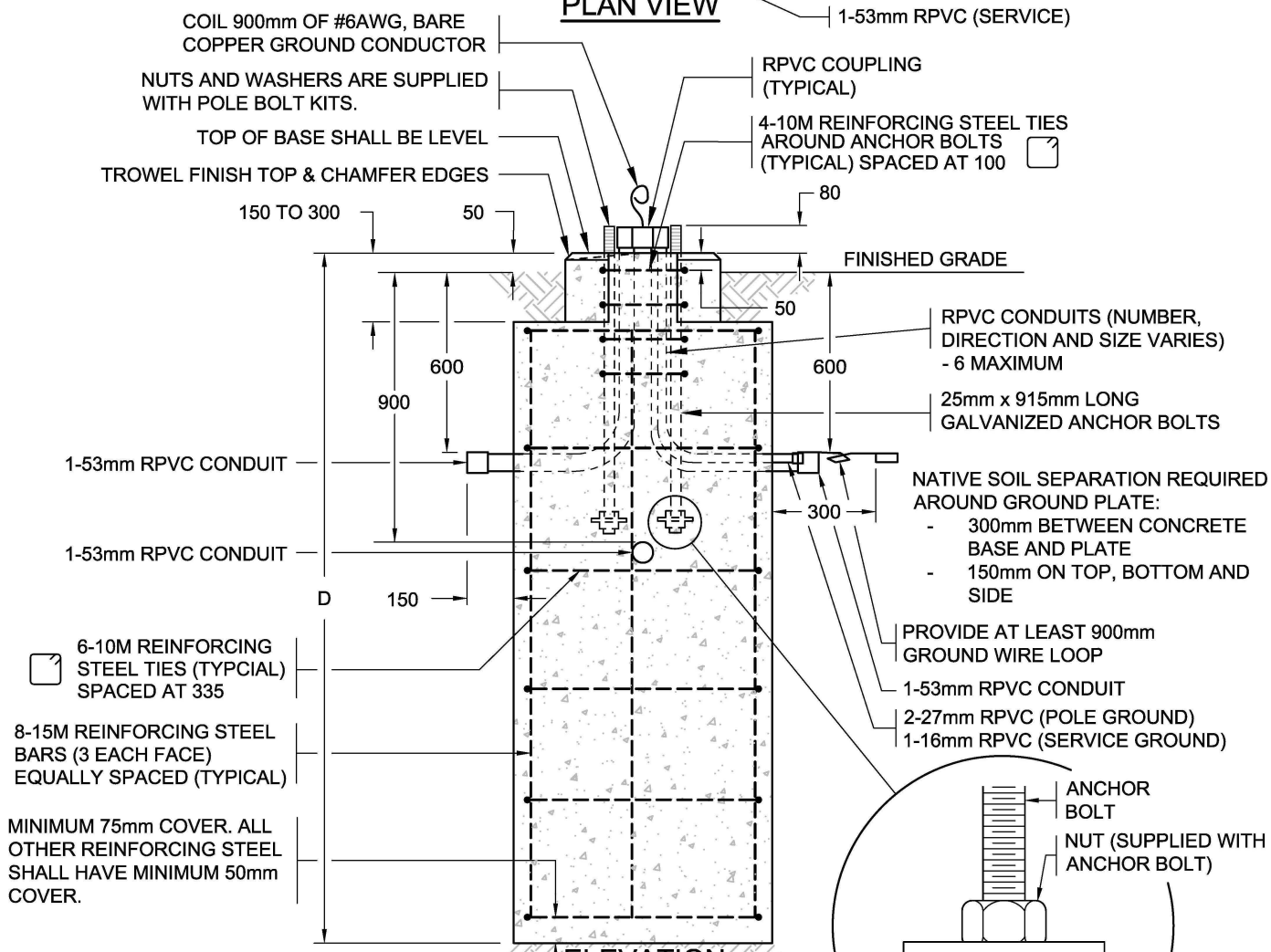

ELEVATION

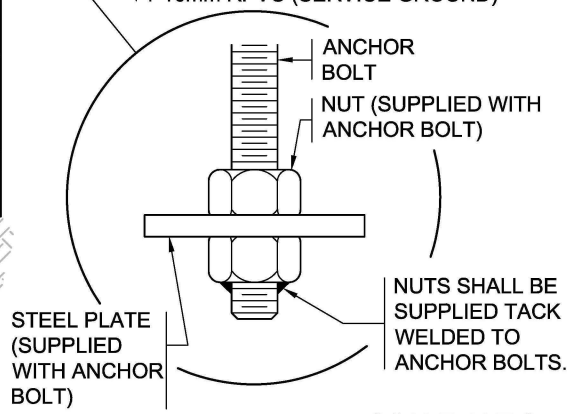

NOTE:

1. SEE DRAWING CE1.1 FOR NOTES AND ADDITIONAL DETAILS.
2. POLE BASE SHALL HAVE STANDING PAD IF SERVICE PANEL IS REQUIRED.
3. POLE GROUND CONDUIT AND PLATE IS REQUIRED ON OLD INFRASTRUCTURE WITH NO BOND WIRE BACK TO THE PANEL AND/OR IF OTHER UTILITIES ARE INSTALLED ON THE POLE.
4. POLE GROUND CONDUIT AND PLATE IS NOT REQUIRED WHEN THERE IS NEW INFRASTRUCURE COMPLETE WITH BOND WIRE BACK TO PANEL.
5. ALL DIMENSIONS IN MILLIMETRES UNLESS OTHERWISE NOTED.

SCALE: N.T.S.

REV.	REVISION DATE	APPROVED

CONCRETE BASES

V1 & V2 POURED IN PLACE CONCRETE BASES

ISSUE DATE: SEPTEMBER 2018

APPROVED BY: D. EPA

CITY OF VANCOUVER	STANDARD DETAIL DRAWINGS ENGINEERING SERVICES - VANCOUVER, B.C.	DRAWING No. CE1.3

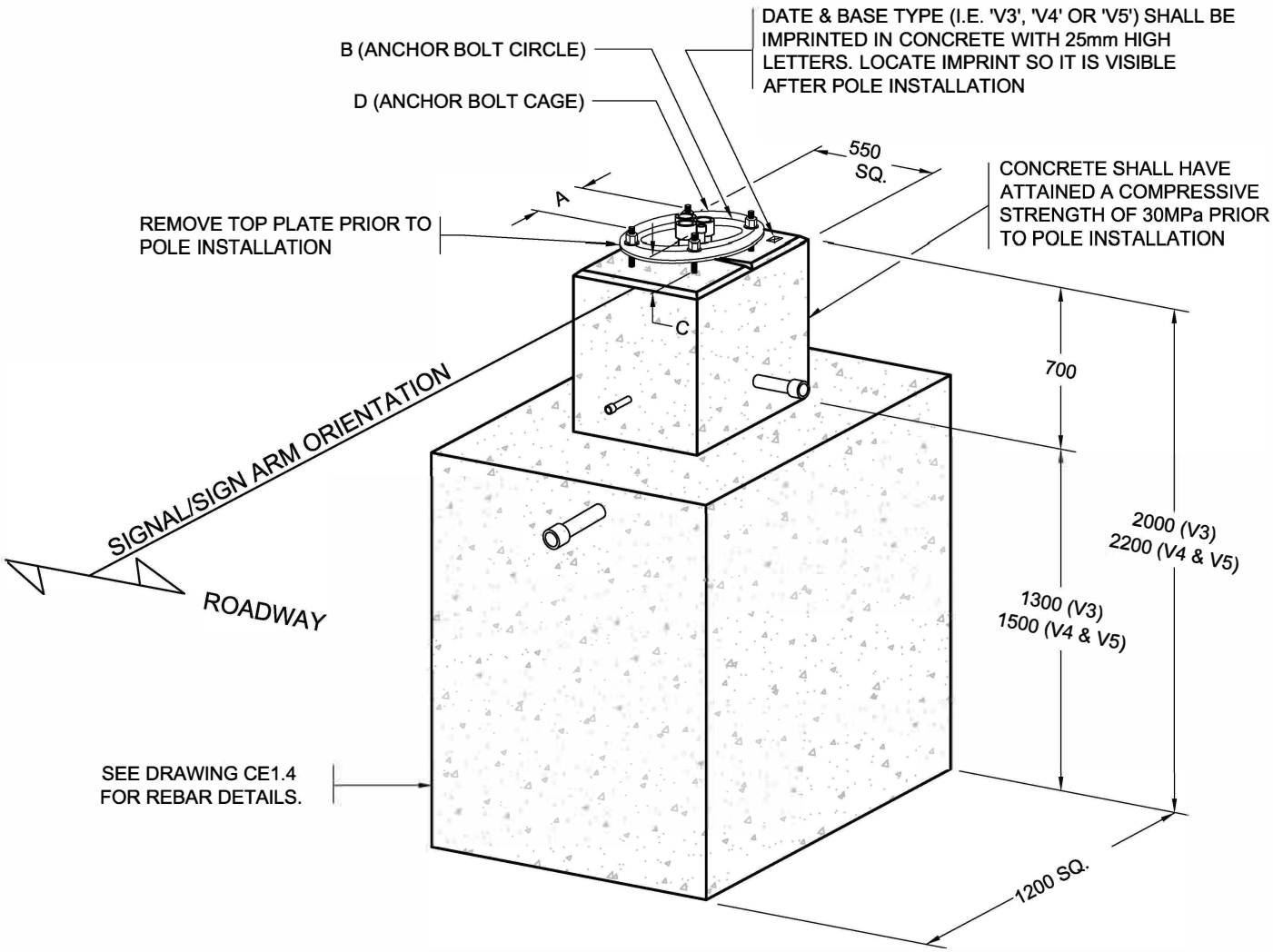

CONCRETE BASE

BASE TYPE	POLE TYPE	A	B	C	D (ANCHOR BOLTS)	VOLUME OF CONCRETE	APPROXIMATE MASS
V3	TYPE 1 AND 3 SHAFTS	197	280	80	4-25mm x 915mm GALVANIZED AISI / SAE 4140 BOLTS	2.08 m^3	5206 kg
V4	TYPE S POLES	243	343	160	4-25mm x 1220mm GALVANIZED GRADE 150 DYWIDAG BOLTS PRE-ASSEMBLED IN A CAGE	2.37 m^3	5925 kg
V5	TYPE L POLES	276	390	140	4-38mm x 1370mm GALVANIZED AISI / SAE 4140 BOLTS PRE-ASSEMBLED IN A CAGE	2.37 m^3	5925 kg

NOTES:
1. REFER TO CONTRACT DRAWINGS, MMCD AND CITY CONSTRUCTION SPECIFICATIONS FOR FURTHER INFORMATION.
2. BASES TO BE IMPRINTED WITH DATE AND BASE TYPE ON TOP OF PEDESTAL.
3. ALL DIMENSIONS ARE IN MILLIMETRES UNLESS OTHERWISE NOTED.

SCALE: N.T.S.

REV.	REVISION DATE	APPROVED

CONCRETE BASES
V3, V4 & V5 POURED IN PLACE CONCRETE BASES

ISSUE DATE: SEPTEMBER 2018
APPROVED BY: D. EPA

CITY OF VANCOUVER

STANDARD DETAIL DRAWINGS

ENGINEERING SERVICES - VANCOUVER, B.C.

DRAWING No.

CE1.4

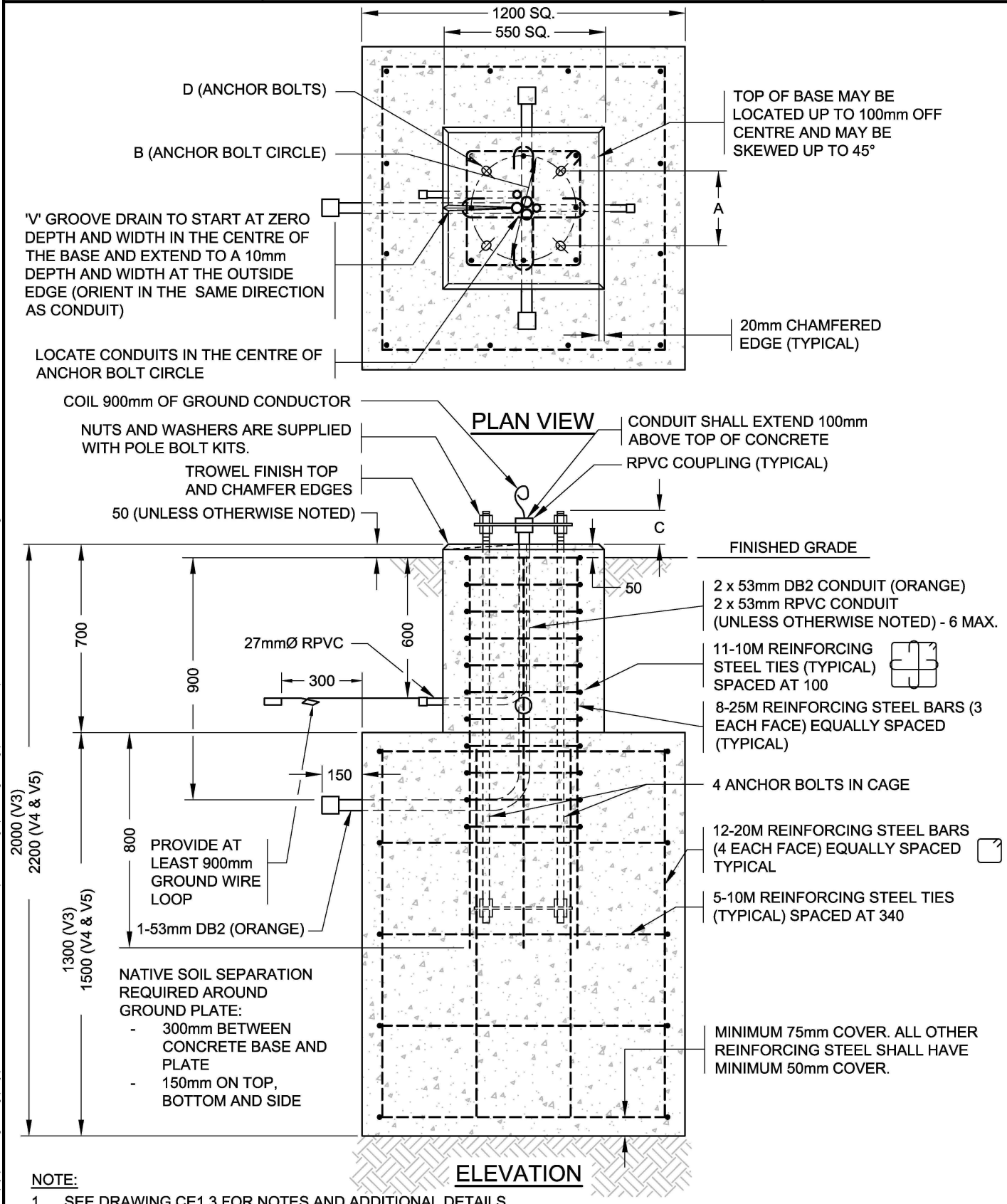

NOTE:

1. SEE DRAWING CE1.3 FOR NOTES AND ADDITIONAL DETAILS.
2. ALL DIMENSIONS IN MILLIMETRES UNLESS OTHERWISE NOTED.

SCALE: N.T.S.

REV.	REVISION DATE	APPROVED

CONCRETE BASES

V3, V4 & V5 POURED IN PLACE CONCRETE BASES

ISSUE DATE: SEPTEMBER 2018

APPROVED BY: D. EPA

CITY OF VANCOUVER	STANDARD DETAIL DRAWINGS ENGINEERING SERVICES - VANCOUVER, B.C.	DRAWING No. CE1.5

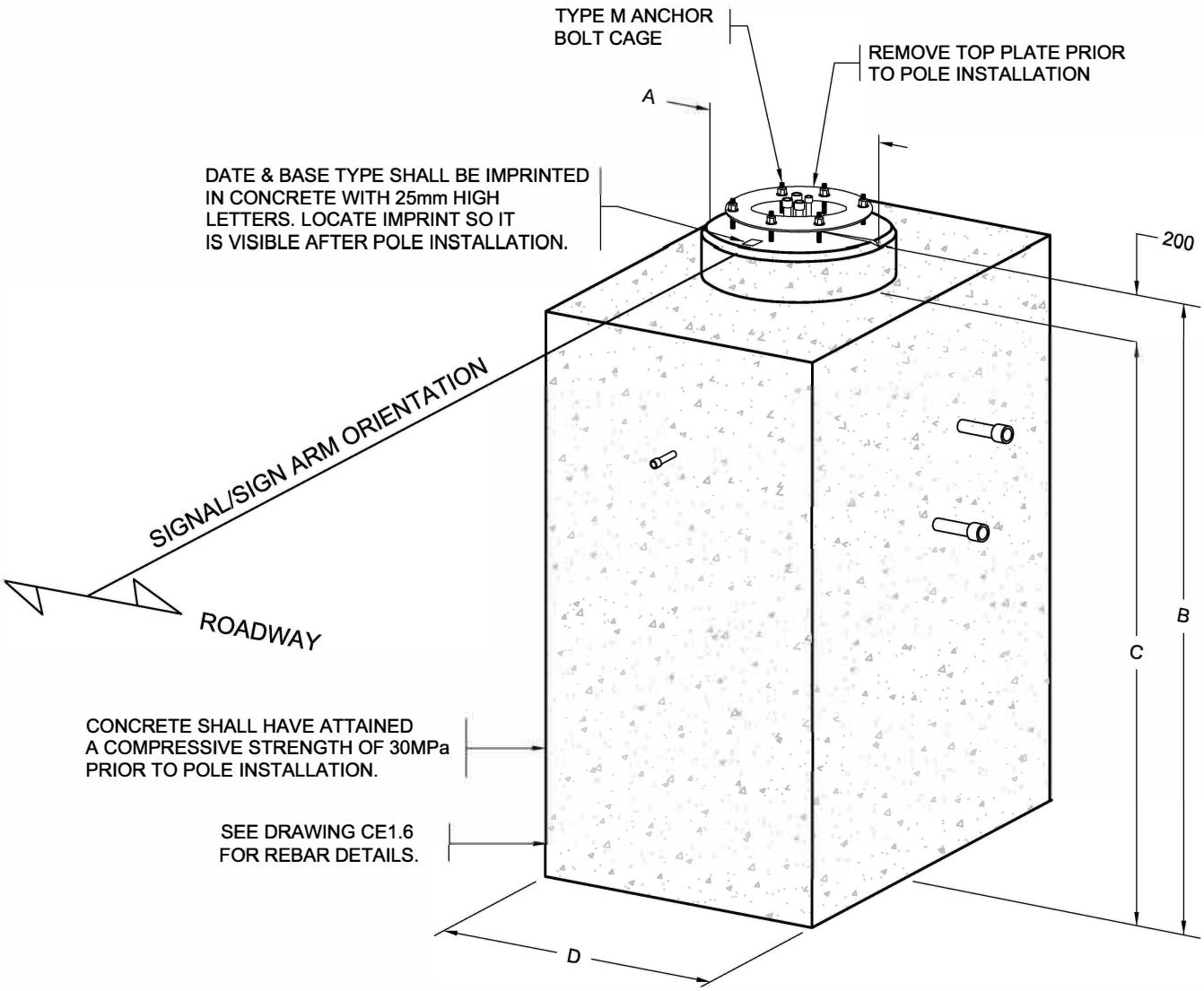

CONCRETE BASE

BASE TYPE	POLE TYPE	A	B	C	D	ANCHOR BOLTS	VOLUME OF CONCRETE	APPROXIMATE MASS
V6	TYPE M POLES	762	2700	2500	1200	ANCHOR BOLTS SHALL BE INCLUDED (6-38mm GALVANIZED AISI/SAE 4140 BOLTS SHALL BE SUPPLIED IN PRE-ASSEMBLED CAGE)	3.69 m^3	9221 kg

NOTES:
1. REFER TO CONTRACT DRAWINGS, MMCD AND CITY CONSTRUCTION SPECIFICATIONS FOR FURTHER INFORMATION.
2. BASES TO BE IMPRINTED WITH DATE AND BASE TYPE ON TOP OF PEDESTAL.
3. SEE PLANS FOR SIGNAL/SIGN ARM ORIENTATION.
4. ALL DIMENSIONS ARE IN MILLIMETRES UNLESS OTHERWISE NOTED.

SCALE: N.T.S.

REV.	REVISION DATE	APPROVED

CONCRETE BASES
V6 POURED IN PLACE CONCRETE BASE

ISSUE DATE: SEPTEMBER 2018
APPROVED BY: D. EPA

CITY OF VANCOUVER

STANDARD DETAIL DRAWINGS

ENGINEERING SERVICES - VANCOUVER, B.C.

DRAWING No.

CE1.6

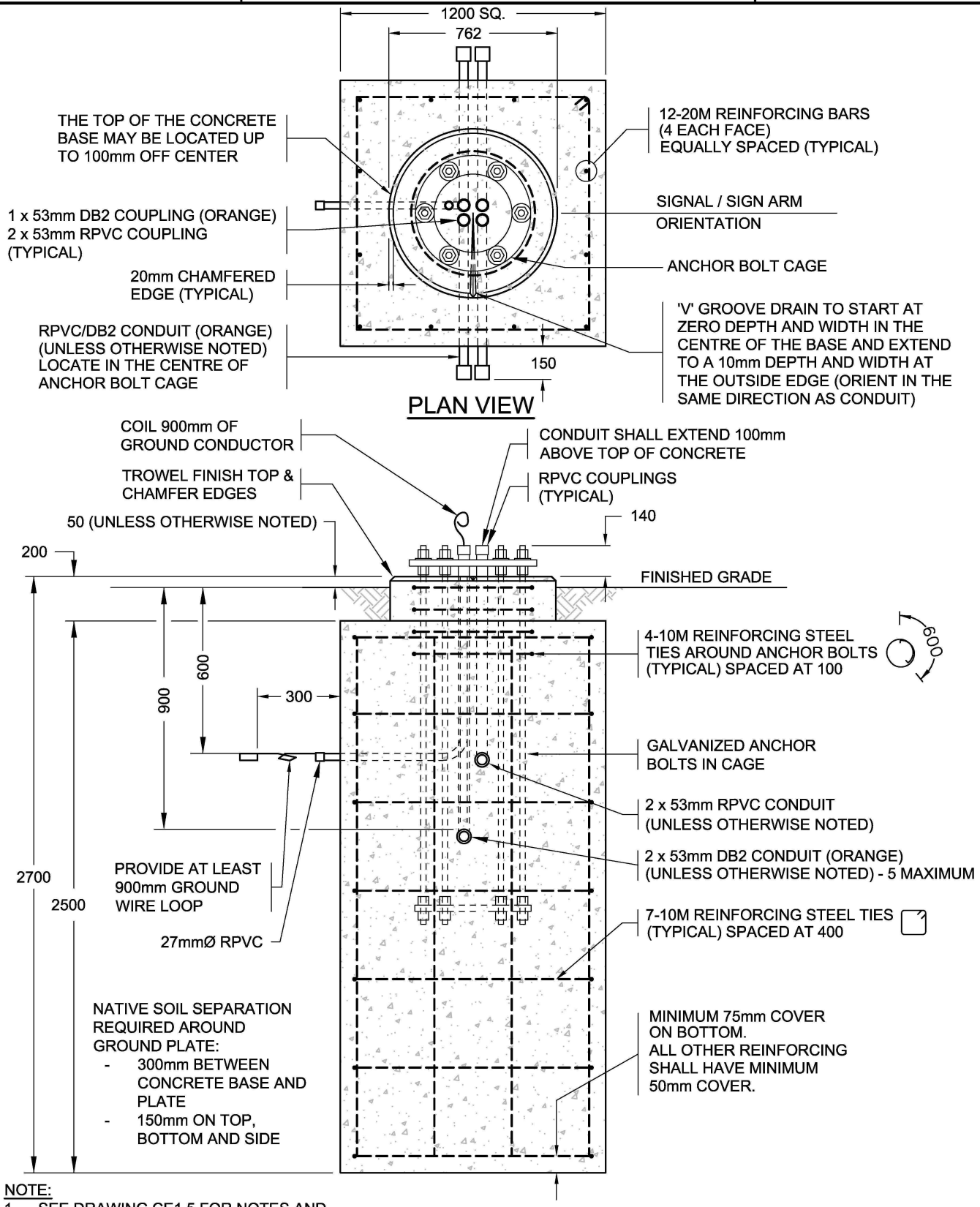

NOTE:

1. SEE DRAWING CE1.5 FOR NOTES AND ADDITIONAL DETAILS.
2. ALL DIMENSIONS ARE IN MILLIMETRES UNLESS OTHERWISE NOTED.

SCALE: N.T.S.

REV.	REVISION DATE	APPROVED

CONCRETE BASES

V6 POURED IN PLACE CONCRETE BASE

ISSUE DATE: SEPTEMBER 2018

APPROVED BY: D. EPA

CITY OF VANCOUVER

STANDARD DETAIL DRAWINGS
ENGINEERING SERVICES - VANCOUVER, B.C.

DRAWING No.
CE1.7

Type of Base	Depth (m)	Type of Pole	Attachments	Factored Load (kN, m)						D/C
				Fx	Fy	Fz	Mx	My	Mz	
V1	1.3	3m Traffic Signal Pole	2-Ped Heads 1-Secondary Head, 8x8x8x12" 2-Secondary Street Signs (8x48")	0.5	2.4	1.2	5.8	1.3	0.4	0.64
		Type 4A Signal Post	2-Ped Signals 1-Signal Head, 8x8x8" 2-Street Signs (8"x48") 1-Construction Sign (32"x 48")	0.65	3.51	1.95	9.4	2.1	0.26	0.94
V2	1.8	Type 5 Shaft	1-Primary Head, 3x12" 1-Primary Street Sign (14"x85")	0.65	3.38	1.17	14.43	3.12	1.3	0.55
		7.6m Single Davit Pole SL	2-32"x60" Banners 2-Secondary Street Signs (8"x48") 2-Flower Baskets 1-Street Light 1-Pedestrian Light	1.3	6.37	2.53	28.34	7.28	2.21	1.00
		7.6m Single Davit Pole TS	2-Ped Heads 1-Signal Head, 8x8x8" 1-Signal Head, 8x8x8x12" 2-Street Signs (8"x26") 1-Street Light 1-Construction Sign (32"x 48") 1-Pedestrian Light	1.04	5.1	2.75	21.6	5.4	1.82	0.78
		7.5m Post Top Luminaire	2-32"x60" Banners 2-Flower Baskets 1-Street Light 2-Street Signs (8"x48")	1.17	5.72	2.1	24.2	5.2	1.04	0.87
		9.1m Single Davit Pole SL	2-32"x60" Banners 2-Flower Baskets 1-Street Light 1-Pedestrian Light and 1m Arm	1.3	6.24	3.12	30.29	7.67	2.47	1.03
		9.1m Single Davit Pole TS	2-Pedestrian Signals 1-Signal Head, 8x8x8" 1-Signal Head, 8x8x8x12" 2-Street Signs (8"x48") 1-Street Light 1-Pedestrian Light and 1m Arm 1-Construction Sign (32"x 48")	1.17	5.85	3.8	25.4	6.8	1.95	0.90
V3	2.0	Type 1 Shaft	Type 2A Luminaire Arm 5.5m Type 3E Signal Arm 1-Primary Head, 3-12" 1-Primary Head, 3-12" 1-Primary Street Sign (14"x72") 2-Ped Signal (18"x18") 2-Secondary Street Signs 1-Secondary Head, 8x8x8" 1-Secondary Head, 8x8x8x12" 1-Street Light	1.8	9	4.6	48	19	27	0.58
		Type 3 Shaft	Type 3E, 5.5m Signal Arm 1-Primary Signal Head, 3x12" 1-Primary Signal Head, 3-12" 1-Primary Street Sign (14"x72") 1-Primary Traffic Sign (24"x36") 2-Ped Signal (18"x18") 2-Secondary Street Signs (8"x48") 1-Secondary Signal Head, 8x8x8"	1.5	7.6	3.7	42	17	28	0.52
V4	2.2	Type S	Type 2A Luminaire Arm Type 0.25L Luminaire Arm Extension 10.5m Type S Arm 1-Street Name Sign (7"x48") 2-Secondary Head, 8x8x8x12" 1-Sign (24"x36") 1-4x300 Signal Head 1-3x300 Signal Head 1-Sign (24"x36") 1-Camera 2-Ped Signal (18"x18") 1-Primary Sign (14"x72")	3	15	9.2	85	38	58	0.75
V5	2.2	Type L	Type 2A Luminaire Arm Type 0.25L Luminaire Arm Extension 11m Type L Arm with 3m Type 3LE Arm Extension 1-4x300 Signal Head 1-3x300 Signal Head 1-3x300 Signal Head 1-Camera 2-Ped Signal (18"x18") 1-Street Name Sign 2-Secondary Head 1-Sign (24"x36") 1-Primary Street Name Sign (14"x72")	3.2	16	12	91	61	78	0.84
V6	2.7	Type M	Type 2A Luminaire Arm Type 0.25M Luminaire Arm Extension 9m Type L Arm with 6m Type 6M Arm Extension 3-3x300 Signal Head 1-Street Sign (14"x72") 1-Camera 1-Traffic Sign 2-Ped Signal 2-Street Name Sign 1-Secondary Head, 8x8x8x12" 1-Secondary Head, 8x8x8"	4.1	20.3	16.7	108	77.2	116	0.59

REV.	REVISION DATE	APPROVED

CONCRETE BASES
MAXIMUM POLE BASE LOADING

ISSUE DATE: SEPTEMBER 2018

APPROVED BY: D. EPA

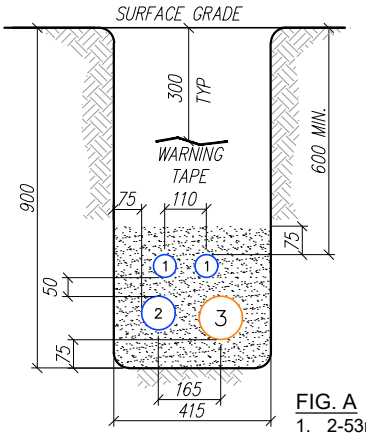

FIG. A
1. 2-53mm RPVC
2. 1-78mm RPVC
3. 1-103mm RPVC (ORANGE)

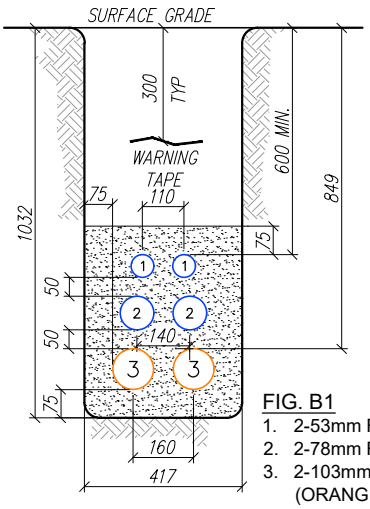

FIG. B1
1. 2-53mm RPVC
2. 2-78mm RPVC
3. 2-103mm RPVC (ORANGE)

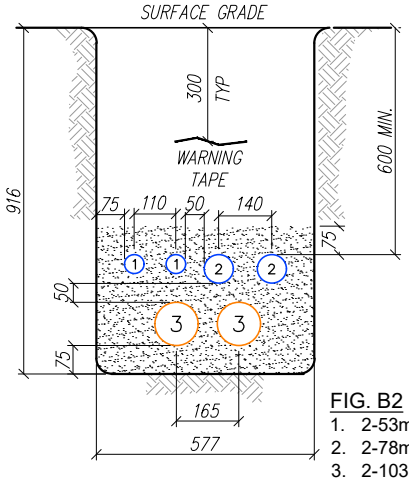

FIG. B2
1. 2-53mm RPVC
2. 2-78mm RPVC
3. 2-103mm RPVC (ORANGE)

LOW-DENSITY CONFIGURATION
(APPLICABLE TO BOTH SIDES OF THE ROAD IN RESIDENTIAL AREAS, LOCAL ROADS, COLLECTORS & BACK LANES)

HIGH-DENSITY CONFIGURATIONS
(APPLICABLE TO BOTH SIDES OF THE ROAD IN ARTERIALS, MAJOR ROADS & DOWNTOWN)

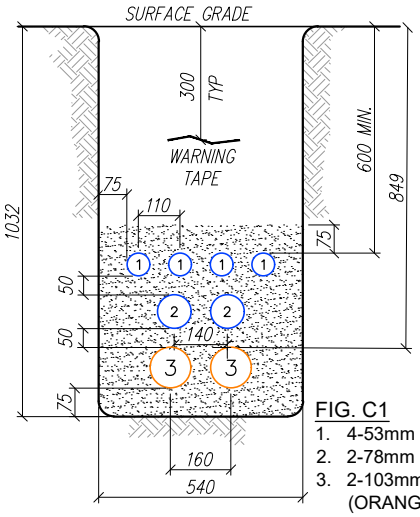

FIG. C1
1. 4-53mm RPVC
2. 2-78mm RPVC
3. 2-103mm RPVC (ORANGE)

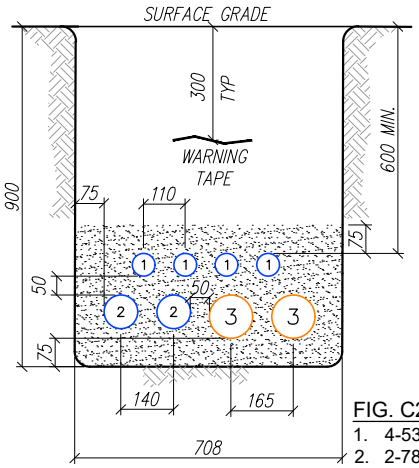

FIG. C2
1. 4-53mm RPVC
2. 2-78mm RPVC
3. 2-103mm RPVC (ORANGE)

H - FRAME PROJECT DUCT CONFIGURATIONS
(APPLICABLE TO DOWNTOWN BACK LANES H-FRAME PROJECT)

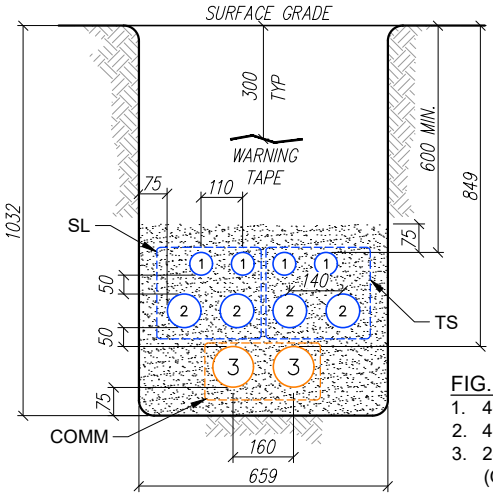

FIG. D
1. 4-53mm RPVC
2. 4-78mm RPVC
3. 2-103mm RPVC (ORANGE)

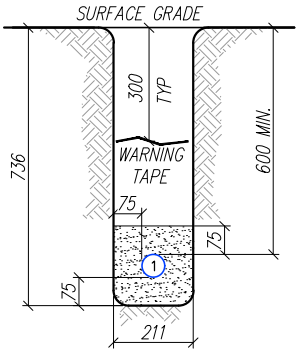

FIG. E
1. 1-53mm RPVC

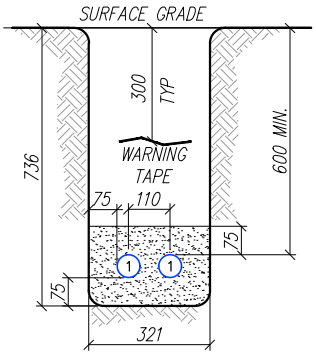

FIG. F
1. 2-53mm RPVC

NON-STANDARD STREET CROSSING DUCT CONFIGURATIONS
(APPLICABLE TO MIDBLOCKS ONLY WHEN APPROVED BY ENGINEER

STREET CROSSING DUCT CONFIGURATION
(APPLICABLE FOR STREET CROSSING AT INTERSECTIONS)

- SAND OR SCREENED DIRT

CITY OF VANCOUVER
Engineering Services

REV NO.	DATE (YY/MON/DD)	REVISION DESCRIPTION	DRAWN	DESIGN	ENG CHECK
2	20/02/18	ADDED B1, E , F AND REVISED D	JL	MJ	MJ
1	20/01/03	REMOVED CONFIG. w/ DB2 & ADDED FIG D	JL	MJ	MJ
0	19/05/08	ISSUED FOR CONSTRUCTION	JL	DE	DE

TEOD - ELECTRICAL DESIGN

COV STANDARD
UNDERGROUND DUCT CONFIGURATIONS FOR STREET LIGHTING / TS / COMM

DRAWING	SCALE	SHEET	REV
M-912	1:20	1 OF 1	2

H:\STLIGHT\ACAD\DWG\MISC\M-900\M-912 REV. 2 2/18/2020 2:27 PM

APPENDIX 14
COV STANDARD POLE BASE DESIGN MEMO – Pole Base Design and Installation Procedure

See attached.

MMM GROUP

CoV Standard Pole Base Design Memo

Pole Base Design and Installation Procedure

Prepared by:	Buho Joo, P.Eng.	2016/12/01
Checked by:	Neon Koon, P.Eng.	2016/12/01
Reviewed by:	Monty Knaus, P.Eng.	2016/12/01
	Name	Signature

Document No.	**5012803-001**	Rev: 0

1. Introduction

The City of Vancouver (CoV) engaged MMM Group to undertake a review of the Standard Operating Procedure for Installation of Traffic Signal and Street Light Base. It is understood that CoV have used the MMCD Pole bases as a reference document for the installation of the pole base and have used the Hydro Vacuum for excavation. However, the configuration of the poles for CoV is not consistent to those in MMCD Standard Spec. In addition, the concrete bases for CoV are cast in place whereas most MMCD pole bases are precast concrete. The purpose of the review was to check if the installation practice employed CoV operation staff comply with industry standards, and make recommendation as necessary.

2. Scope

Further, MMM Group was assigned to develop standard pole base designs, to replace the specification that CoV Operations group previously used which did not fully comply or document the relevant standards. The product of this work is an assembly of technical documents for the design and installation procedures for a specific set of standard pole foundations and based on a specific set of site conditions. The standard pole base designs are captured in the City's Standard Pole Base Drawings.
This memo is the Administrative Record for CoV's Standard Operation Procedure for Installation of Traffic Signal and Street Light Base. The memo includes a list of the relevant CoV documents, and all engineering documents associated with the Standard Operation Procedure for Installation of Traffic Signal and Street Light Base in Appendix.

The installation of the miscellaneous electrical structure such as controller bases, junction boxes, and vaults are not covered by this document.

3. Reference Documents List

3.1 Standard Operating Procedure (SOP) for Installation of Traffic Signal and Street Light Bases

The updated SOP is provided in the Engineering Documents Appendix and further references the following documents which are not attached by available elsewhere

- OH&S Regulation
    - Part 8: Personal Protective Clothing and Equipment
    - Part 20: Construction, Excavation and Demolition
- MMCD Platinum Edition (2009)
- Contaminated Sites Regulation (BC Reg. 375/96, includes amendments up to BC Reg. 4/2014, January 31, 2014)
- Hazardous Waste Regulation (BC Reg. 63/88, includes amendments up to BC Reg. 63/2009, April 1, 2009)
- ENG - OHS - Personal Protective Equipment PPE Standard

3.2 ENG - STEOB - OHS - Streets Risk Assessment Engineering Documents

- Attachment 1: ENG - STEOB - SOP – Standard Operating Procedure for Installation of Traffic Signal & Street Light Bases
- Attachment 2: Pole Base Reactions (Nova Pole)
- Attachment 3: Pole Base Design Summary (MMM Group)
- Attachment 4: CoV Standard Pole Base Drawings (DMD)
- Attachment 5: CMBC Standard Drawings (CMBC)
- Attachment 6: Geotechnical Recommendation for CoV Standard Pole Base (Thurber)

Attachment 1 –Standard Operating Procedure for Installation of Traffic Signal & Street Light Bases

CITY OF VANCOUVER

Engineering

Pole Base Installation Procedure

Title:	Installation of Traffic Signal & Street Light Base		
Business Unit:	Engineering	**Effective Date:**	June 2016
Branch:	Streets Operations	**Revision Date:**	June 2016

I. OBJECTIVE

This Standard Operating Procedure has been developed to ensure that the **Installation of Traffic Signal & Street Light Base** are constructed in a consistent, uniform and appropriate manner in accordance with good engineering and construction practice. This procedure is intended addresses all relevant design, specification and engineering requirement to ensure safe and reliable performance of signal and light bases, but is not intended to be a comprehensive procedure for all base types and locations and is not intended to relieve the installers of sound engineering judgement

This document shall be used in conjunction with Van Docs document: ENG - STEOB – SOP – Installation of Traffic Signal & Street Light Base - Safe Operating Procedure.

Below is the general understanding of the work scope for pole base and pole installation.

- Electrical department is responsible for all electrical work including installation of Controller Box, and Pole.
- Civil Department is responsible for the works related to installation of the Pole Foundation/base and Junction Box.
- The supplier is responsible for the design and fabrication/supply of the pole.

II. PREREQUISITE

The following items shall be confirmed/verified prior to commencing the base installation work:

A. Pole

- Pole type from Electrical/CMBC
- Number of conduits and sizes to be installed
- Pole location and orientation

B. Foundation

- Acquire BC One Call Package
- Review the BC One Call Package. Request for a Utility Locator if working in proximity to underground utilities
- Plan the works in accordance with City of Vancouver Safe Operating Procedures and Civil Base Specifications provided in Appendix.
- Conduct Streets Risk Assessment

- If needed, Design/Plan traffic control according to the Ministry of Transportation and Infrastructure (MOTI) Traffic Control Manual for Work on Roadways.

III. EXCAVATION

In general, the excavation shall be conducted in accordance with MMCD Section 31-23-01 and OHS Regulation Part 20 Clauses 20.78 to 20.95

- Set up control zone to safely secure the work area from the public
- Excavate to minimum required depth of base and to minimum dimensions
- Excavations and adjacent facilities shall be protected as necessary

*****EXCAVATION NOTE*****

Excavation work must be done in accordance with the written instructions of a qualified registered professional if

(a) the excavation is more than 6 m (20 ft) deep,

(b) an improvement or structure is adjacent to the excavation,

(c) the excavation is subject to vibration or hydrostatic pressure likely to result in ground movement hazardous to workers, or

(d) the ground slopes away from the edge of the excavation at an angle steeper than a ratio of 3 horizontal to 1 vertical.

Excavation work must also be done in accordance with the written instructions of a professional engineer if the excavation requires or uses support structures. The written instructions required by this section must

(a) be certified by the qualified registered professional concerned,

(b) be available at the site, and

(c) specify the support and sloping requirements, and the subsurface conditions expected to be encountered

*****BURIED UTILITIES *****

(a) When the buried facilities are expected at the site, or unexpected buried facilities are encountered, the excavation shall be carried out in accordance with Work safe BC "Prevention of Damage to Buried Facilities in British Columbia".

- Hand expose all buried facilities before using mechanical excavation equipment.
- If it is not practical to hand dig, hydrovacing or airvacing may be considered.

(b) If the presence of buried utilities results in the custom pole base, the pole base shall designed by a Registered Professional Engineer.

*****CONTAMINATED SOIL *****

When suspected contaminated soil is encountered, cease excavation activities.

Indications of potentially contaminated soil include odour or discoloration of soils.

(a) Contact the Environment Division (ED) of Environmental and Natural Resources (ENR) so that a certified environmental professional shall be deployed to conduct screening and sampling of the suspect soil.

(b) Any potentially contaminated material that has already been excavated shall be placed on and covered with continuous heavy duty plastic sheeting pending analytical results.

(c) If analytical results indicate that the soil meets the applicable standards, soil can be handled or disposed of in accordance with the original specifications.

(d) If analytical results indicate that he soil exceeds the applicable standards, handling and disposal requirements may be more rigorous and remediation may be required. In this scenario, contact ED to determine the necessary handling and disposal requirements, and required level of remediation. For more details, see "Environmental Guideline for Contaminated Site Remediation"

IV. Identification of Soil

The following shall be used to confirm suitability of subgrade soil for support of pole bases.

*****Confirmation of the geotechnical resistance of soil *****

(a) The light base foundation subgrade shall be capable of providing a competent foundation that can provide 100kPa ULS Bearing Resistance as a minimum. For reference, competent foundation shall comprise compact granular soil or firm to stiff fine-grained soil.
(*Compact granular soil – penetration of 300 mm or less using a 12.7 mm diameter rebar pushed by hand/body weight; Firm to stiff fine-grained soil – penetration of 25 mm or less using moderate pressure on thumb*)

(b) The light base foundation subgrade shall be maintained in a dry condition prior to rebar installation and casting concrete.

(c) If the bottom of an excavation is not competent (such as very loose to loose coarse-grained soil or very soft to soft fine-grained soil), it may be necessary to excavate deeper (subexcavation) to a competent foundation material or to a maximum of 500 mm below footing and then backfill to the underside of foundation base. The subexcavation shall be backfilled as described below.

(d) Base excavations shall be backfilled using the excavated material provided it consists of clean well graded granular soil having a maximum fines content (% Passing No. 200 sieve, i.e. silt and clay size particle) of 8% and maximum aggregate size of 100 mm.

(e) Where backfill material does not conform to above, base excavation shall be backfilled with crushed gravel Granular Base as specified in MMCD Section 31-05-17 Clause 2.10.

(f) Surplus excavated soil or unacceptable material shall be disposed of off-site.

(g) If backfill material is to be replaced, and/or soil is over excavated, the formwork shall be provided to the bottom of the base.

(h) Backfill placement and compaction shall meet the appropriate MMCD requirements.

V. Setting Form / Installation of Rebar and Anchor Rod / Backfill

The following shall be used for setting the pole base forms, installation of reinforcing steel and anchor bolts, casting concrete and soil backfilling.

- Set base template and anchor rods; install rebar cages as required
- Provide minimum 24h notice to Electrical and/or CMBC prior to concrete pour - The orientation of anchor bolts to be confirmed
- Pour concrete – place and finish

  - Exposed surface: Class 3 finish

  - Buried surfaces: Class 1 finish

*****Concrete Strength*****

(a) Concrete test cylinders at the location of the pour shall be taken, and performed tests in accordance with BC MOTI Spec 211.09.01 when requested.

(b) All Concrete Bases shall have their concrete strength verified with the exception of controller base, sign post bases and post mounted flasher bases. Pre-cast concrete bases constructed off-site shall have their strength verified by providing certification from Materials contact Administrator.

(c) Concrete mix designs that have been successfully used and performance verified through testing may have a reduced frequency of strength testing.

VI. Restoration

Areas where work has been performed shall be returned to their original condition and must be left in a neat state to the satisfaction of owner of the Area.

For Details of restoration, see Van Docs document: ENG - STEOB – Street Restoration Manual

VII. Repair/Extension of Anchor Rods

The following shall be used when repair or extension of the anchors rods is necessary.

1) When anchor rods are damaged, it shall be determined by a Professional Engineer if the existing anchor rod can be reused.

2) The repair procedure of damaged anchor rods shall be reviewed and approved by professional Engineer.

3) The extension of the anchor rods may be used as repairing measure for damaged anchor rod. The length of extension and type of coupler shall be reviewed and approved by a Professional Engineer prior to commencing.

VIII. REFERENCES

I. Regulatory References

- *MMCD Platinum Edition*
- *Contaminated Sites Regulation (BC Reg. 375/96, includes amendments up to BC Reg. 4/2014, January 31, 2014)*
- *Hazardous Waste Regulation ((BC Reg. 63/88, includes amendments up to BC Reg. 63/2009, April 1, 2009)*

II. City of Vancouver References / VanDocs:

The following documents are referenced for this work and should be concurrently followed along with this procedure. These documents are available through VanDocs:

- ENG - OHS - Personal Protective Equipment PPE Standard
- ENG - STEOB - OHS - Streets Risk Assessment
- ENG - STEOB – Street Restoration Manual

IX. Appendix

- Civil Electrical Base Specification

X. SIGN-OFF

Procedure Approval

Insert Name and Date June 21, 2016	Insert Name and Date
Insert Job Title Civil Electrical Superintendent.	Insert Job Title

Attachment 2 – Pole Base Reactions

NOVA POLE

City of Vancouver

Summary of Base Reaction Forces
For
Standard Street Light and Traffic Signal Poles

December 14, 2016

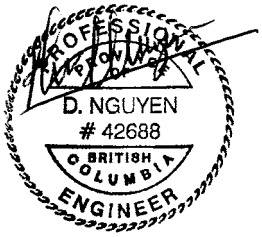

DEC 14, 2016

#101 & 102 – 19433 96th Avenue
Surrey, B.C., Canada V4N 4C4
Tel: 604-881-0090 Fax: 604-881-0008
admin@novapole.com
www.novapole.com

Parkland Industrial Estates
203 – 26229 Township Road 531A
Acheson, (Edmonton) AB, Canada T7X 3G4
Tel: 780-962-0010 Fax: 780-962-9538
edmonton@novapole.com

1.0 INTRODUCTION

The City of Vancouver had requested Nova Pole to provide base reaction forces of standard street light poles and traffic signal structures designed and manufactured according to CoV loading specifications and/or MMCD specifications. The City provided loading information as presented in this report for the different structure configurations. It is the intent of the City to use the base reaction forces to design the foundations and to verity the site soil conditions for the pole structures as noted in this report.

2.0 WIND LOADING

The standard CoV wind loading specification is maximum wind gust speed of 160 km/hr (i.e. gust factor included). This is equivalent to CSA S6 design wind pressure of 480 Pa plus 2.5 gust factor. According to CSA S6-14, this is equivalent to 1 in 50yr design wind pressure for Vancouver. The minimum design wind load for lighting poles less than 16m and for traffic signal poles is 1 in 25yr design wind pressure plus 2.5 gust factor, per CSA S6-14 Sec.3.10.1.2(c) and Sec.3.10.1.3.

For the purpose of this exercise, the City had requested that the estimated base reaction forces to be reported using the 1 in 25yr return period wind pressure at 430 Pa for Vancouver, BC.

3.0 SIGNAGE, LIGHTING FIXTURES, AND ATTACHMENTS LOADING

Below is a summary of the signage, lighting fixtures, and attachment information and data provided by the City and assumed design data based on typical industry standard products.

- Street light fixture: 0.25 sq.m EPA and 25 kg (each)
- Pedestrian light fixture: 0.25 sq.m EPA and 25 kg (each)
- 32” wide x 60” long/tall banner (1.24 sq.m)
- Flower basket: 0.25 sq.m and 28 kg (each)
- Pedestrian signal head: 18”x 18”
- 200-200-200 signal head without back board: 0.16 sq.m EPA
- 200-200-200-300 signal head without back board: 0.30 sq.m EPA
- Secondary street name sign: 8” x 48” (mounted on vertical shafts)
- Construction sign: 32”x 48”
- Directional traffic sign: 24”x 36”
- 4x300 signal head with backboard: 1.14 sq.m EPA and 22 kg (each)
- 3x300 signal head with backboard: 0.90 sq.m EPA and 22 kg (each)
- Traffic camera: 0.20 sq.m EPA

4.0 ESTIMATED BASE REACTIONS FORCES

The estimated factored reaction forces were calculated based on the loading factors per CSA S6-14 Annex A3.2. The base reactions forces listed in this report do not include ice loads. The load combination with ice loads typically yield lower combined base resultant forces.

5.0 RESULTS SUMMARY

Estimated base reaction forces were calculated for the following structures. Loading diagram and estimated reaction forces are shown in Appendix A.

9.1mx1.8m Single Davit Pole	- See pages A1 and A2	of Appendix A
7.6mx1.8m Single Davit Pole	- See pages A3 and A4	"
7.5m post top (MMCD dwg E4.19)	- See page A5	"
Type 4A – 4.0m	- See Page A6	"
Type S signal pole w/ 10.5m S-arm	- See Page A7	"
Type L signal pole w/ 14m L-signal arm (3LE + 11m L-arm)	- See Page A8	"
Type M signal pole w/ 15m M-signal arm (6M ext + 9m L-arm)	- See Page A9	"
Type 3 signal pole w/ 5.5m 3E signal arm	- See Page A10	"
Type 5 – 5.0m	- See Page A11	"
Type 1 signal pole w/ 5.5m 3E signal arm	- See Page A12	"
CoV 3.0m traffic post top	- See Page A13	"

6.0 CONCLUDING REMARKS

Estimated base reaction forces for different lighting poles and traffic signal structures were calculated at the request of the City of Vancouver. Loading data were based on information provided by the City and/or based on standard industry products are readily available in the market place. Loading diagrams for the pole structures are provided in Appendix A based on information provided by the City. The factored base reaction forces were calculated based on the loading configuration as noted. Please report any discrepancies to Nova Pole engineering department for review and revisions.

APPENDIX A

Estimated Base Reaction Forces And Loading Diagrams

#101 & 102 – 19433 96th Avenue
Surrey, B.C., Canada V4N 4C4
Tel: 604-881-0090 Fax: 604-881-0008
admin@novapole.com
www.novapole.com

Parkland Industrial Estates
203 – 26229 Township Road 531A
Acheson, (Edmonton) AB, Canada T7X 3G4
Tel: 780-962-0010 Fax: 780-962-9538
edmonton@novapole.com

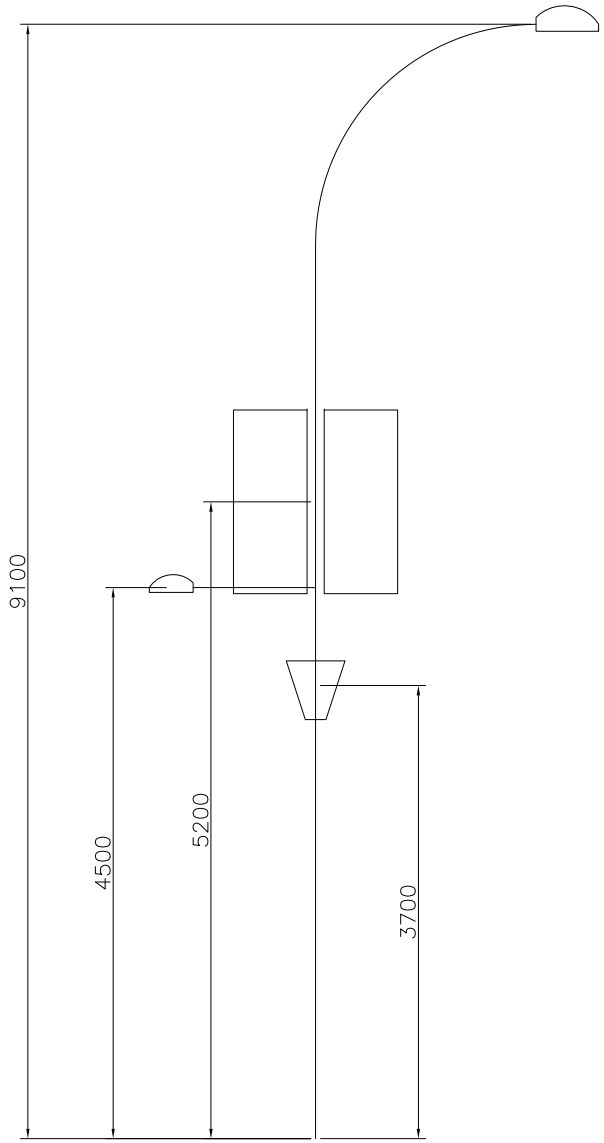

Attachments	Factored Base Reactions (kN, m)						Wind Pressure
	Fx	Fy	Fz (Axial)	Mx (Overturning)	My	Mz (Torsion)	
SL: 2- 32"x60" Banners at 5.20m height 2- flower baskets at 3.7m height (0.25 sq.m area, w=28kg) 1- street light at 9.1m height (Max EPA=0.25 sq.m, w=25kg) 1- Pedestrian light and 1m arm at 4.5m height (EPA=0.25 sq.m, w=25kg)	1.3	6.24	3.12	30.29	7.67	2.47	430Pa

SL–9.1x1.8m Single Davit Pole
DWG #107–30–A3006A–F

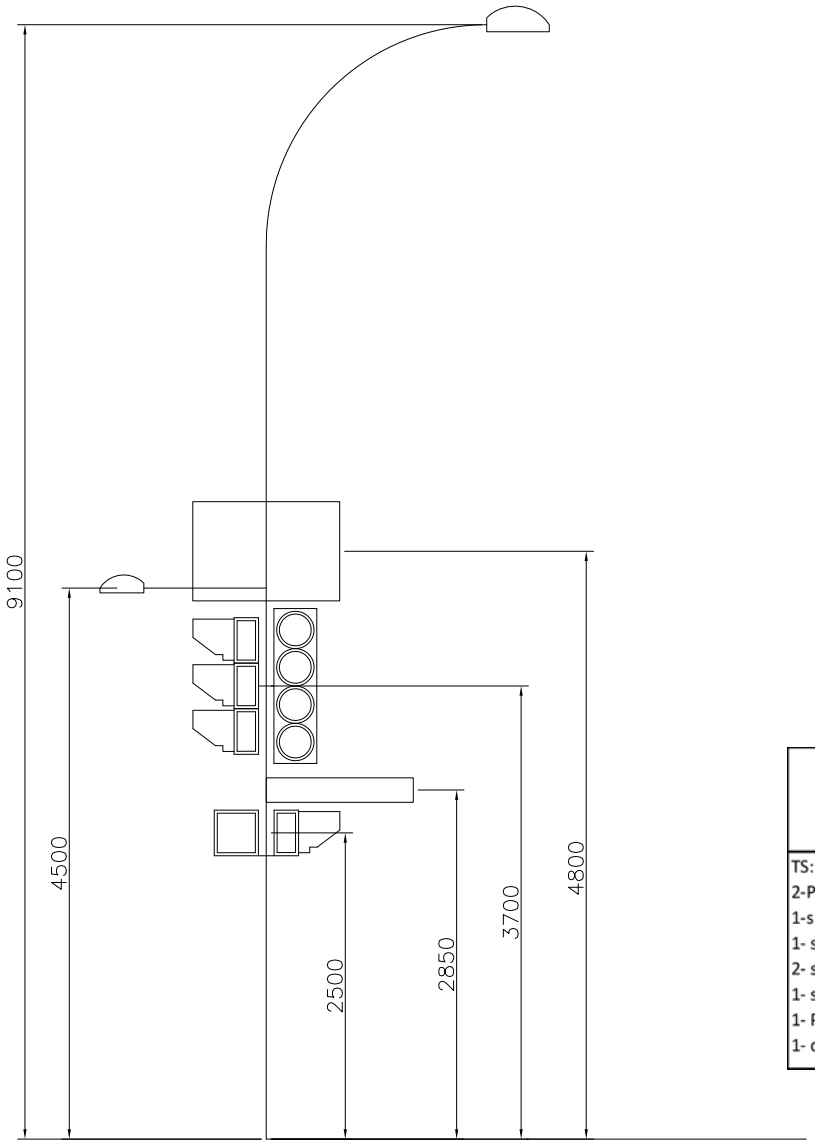

Attachments	Factored Base Reactions (kN, m)						Wind Pressure
	Fx	Fy	Fz (Axial)	Mx (Overturning)	My	Mz (Torsion)	
TS: 2-Pedestrian Signals at 2.5m height (18"x18") 1-signal head, 8x8x8" at 3.7m height 1- signal head, 8x8x8x12" at 3.7m height 2- street signs at 2.85m height (8"x48") 1- street light at 9.1m height (EPA=0.25 sq.m, w=25kg) 1- Pedestrian light and 1m arm at 4.5m height (Max EPA=0.25 sq.m, w=25kg) 1- construction sign (32"x48") at 4.8m height	1.17	5.85	3.8	25.4	6.8	1.95	430Pa

TS–9.1x1.8m Single Davit Pole
DWG #107–30–A3006A–F

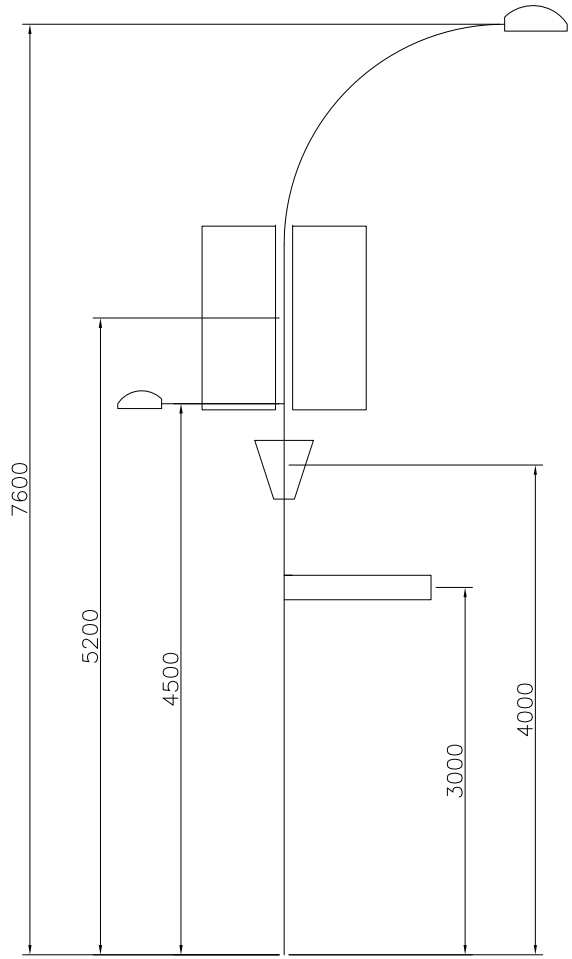

SL–7.6x1.8m Single Davit Pole
DWG:107–30–A2506A–F

Attachments	Factored Base Reactions (kN, m)						Wind Pressure
	Fx	Fy	Fz (Axial)	Mx (Overturning)	My	Mz (Torsion)	
SL: 2-32"x60" Banners, centre line at 5.20m height 2-Secondary Street Signs at 3m height (8"x48") 2-Flower Baskets at 4m height (0.25 sq.m area, w=28kg) 1-Street Light at 7.6m height (EPA=0.25 sq.m, w=25kg) 1-pedestrian light (house side) on a 1m arm at 4.5m above pole base plate	1.3	6.37	2.53	28.34	7.28	2.21	430Pa

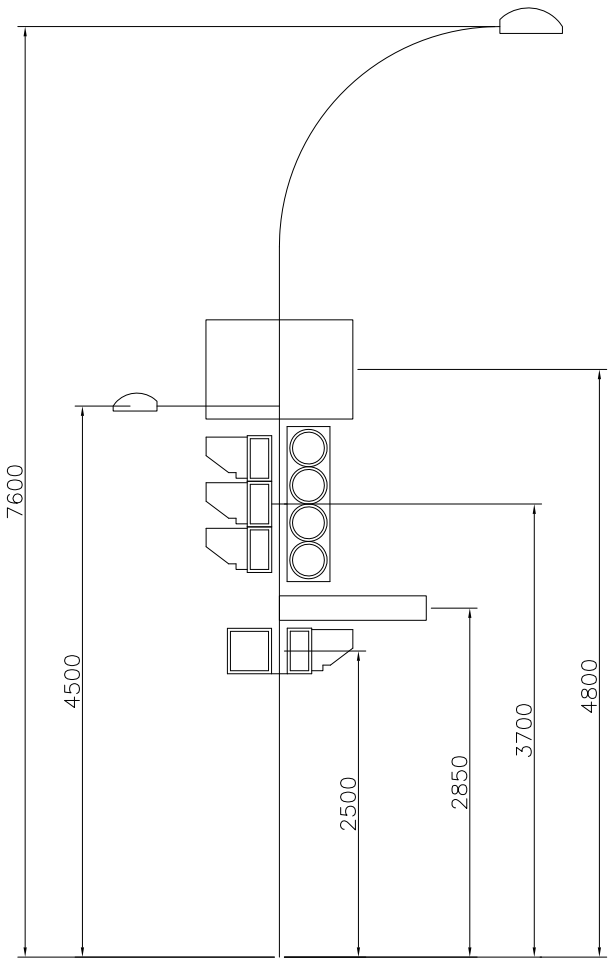

TS–7.6x1.8m Single Davit Pole
DWG:107–30–A2506A–F

Attachments	Factored Base Reactions (kN, m)						Wind Pressure
	Fx	Fy	Fz (Axial)	Mx (Overturning)	My	Mz (Torsion)	
TS: 2- Ped Signals at 2.5m height (18"x18") 1- signal head, 8x8x8" at 3.7m height 1- signal head, 8x8x8x12" at 3.7m height 2- street signs at 2.85m height (8"x26") 1- street light at 7.6m height (EPA=0.25 sq.m, w=25kg) 1- Construction Sign 32"x 48" 4.80m above pole base plate 1-Pedestrian Light (house side) on a 1m arm at 4.5m above pole base plate	1.04	5.1	2.75	21.6	5.4	1.82	430Pa

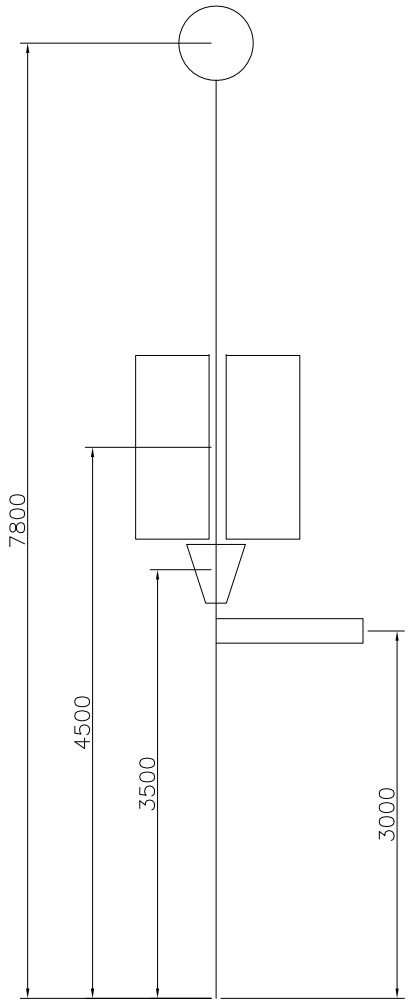

7.5m Post Top Luminaire
DWG:107-75-85A243-F

Attachments	Factored Base Reactions (kN, m)						Wind Pressure
	Fx	Fy	Fz (Axial)	Mx (Overturning)	My	Mz (Torsion)	
2- 32"x60" Banners at 4.50m height to centre (1.24 sq.m area) 2- flower baskets at 3.5m height (0.25 sq.m area, w=28kg) 1- street light at 7.8m height (EPA=0.25 sq.m, w=25kg) 2- street signs at 3m height (8"x48")	1.17	5.72	2.1	24.2	5.2	1.04	430Pa

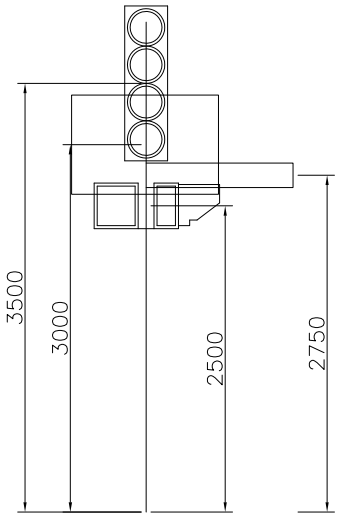

Type 4A Signal Post
DWG:107-70-30M04A

Attachments	Factored Base Reactions (kN, m)						Wind Pressure
	Fx	Fy	Fz (Axial)	Mx (Overturning)	My	Mz (Torsion)	
2- Ped Signals at 2.5m height (18"x18") 1- signal head, 8x8x8x12" at 3.5m height 2- street signs at 2.75m height (8"x48") 1-Construction Sign (32"x48") at 3m height	0.65	3.51	1.95	9.4	2.1	0.26	430Pa

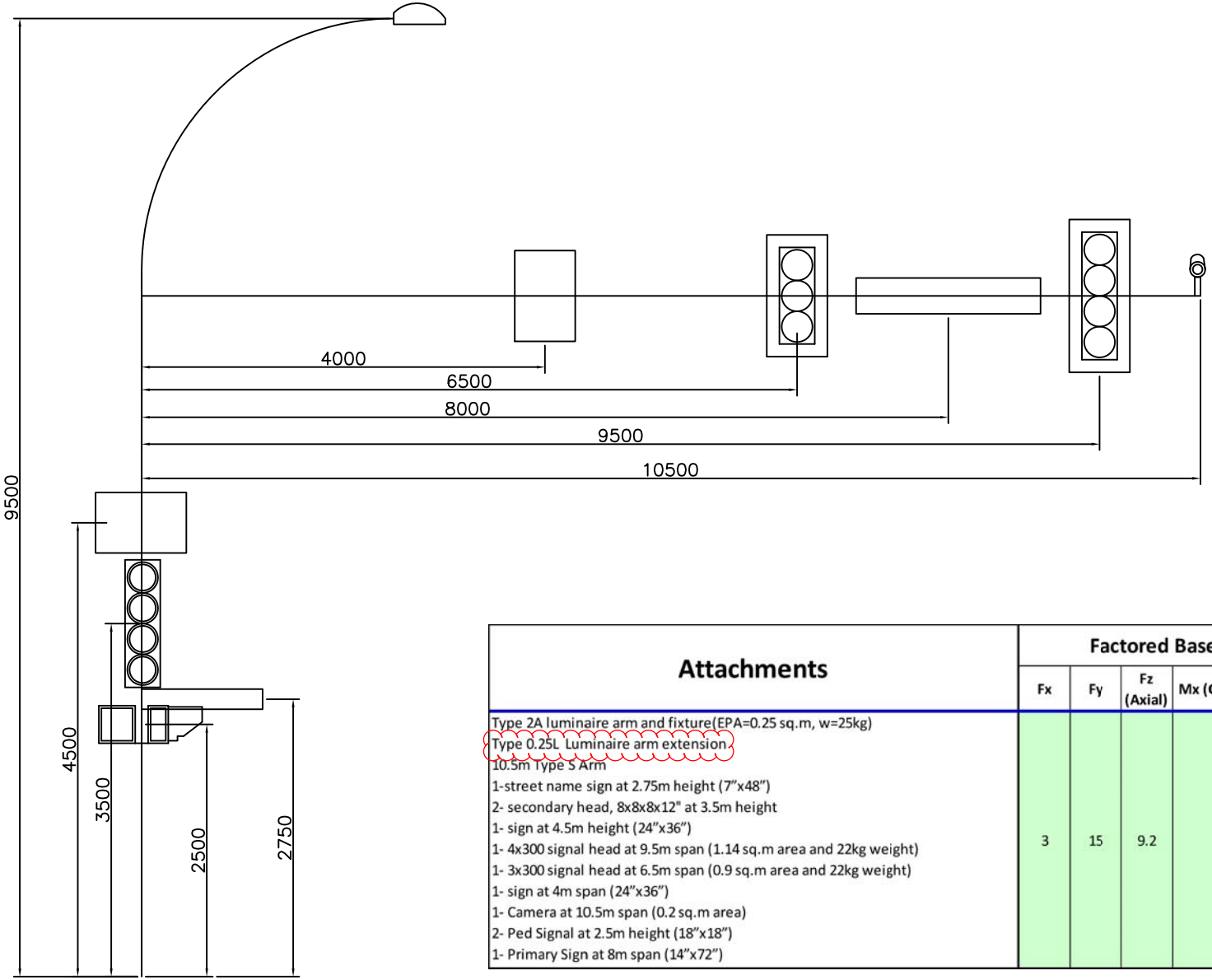

Attachments	Factored Base Reactions (kN, m)						Wind Pressure
	Fx	Fy	Fz (Axial)	Mx (Overturning)	My	Mz (Torsion)	
Type 2A luminaire arm and fixture(EPA=0.25 sq.m, w=25kg) Type 0.25L Luminaire arm extension 10.5m Type S Arm 1-street name sign at 2.75m height (7"x48") 2- secondary head, 8x8x8x12" at 3.5m height 1- sign at 4.5m height (24"x36") 1- 4x300 signal head at 9.5m span (1.14 sq.m area and 22kg weight) 1- 3x300 signal head at 6.5m span (0.9 sq.m area and 22kg weight) 1- sign at 4m span (24"x36") 1- Camera at 10.5m span (0.2 sq.m area) 2- Ped Signal at 2.5m height (18"x18") 1- Primary Sign at 8m span (14"x72")	3	15	9.2	85	38	58	430Pa

Signal Pole – Type S Shaft

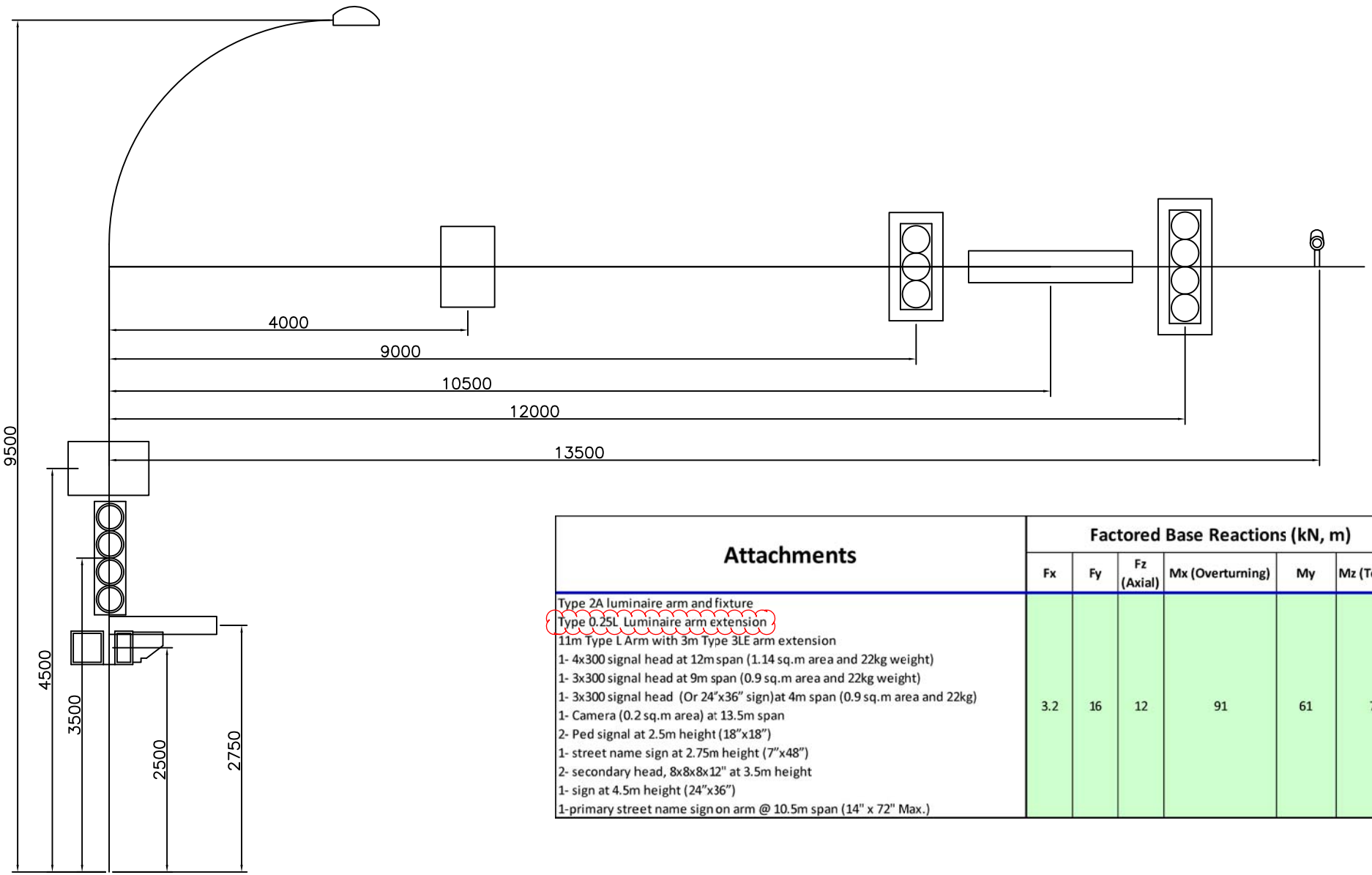

Attachments	Factored Base Reactions (kN, m)						Wind Pressure
	Fx	Fy	Fz (Axial)	Mx (Overturning)	My	Mz (Torsion)	
Type 2A luminaire arm and fixture Type 0.25L Luminaire arm extension 11m Type L Arm with 3m Type 3LE arm extension 1- 4x300 signal head at 12m span (1.14 sq.m area and 22kg weight) 1- 3x300 signal head at 9m span (0.9 sq.m area and 22kg weight) 1- 3x300 signal head (Or 24"x36" sign)at 4m span (0.9 sq.m area and 22kg) 1- Camera (0.2 sq.m area) at 13.5m span 2- Ped signal at 2.5m height (18"x18") 1- street name sign at 2.75m height (7"x48") 2- secondary head, 8x8x8x12" at 3.5m height 1- sign at 4.5m height (24"x36") 1-primary street name sign on arm @ 10.5m span (14" x 72" Max.)	3.2	16	12	91	61	78	430Pa

Signal Pole – Type L Shaft

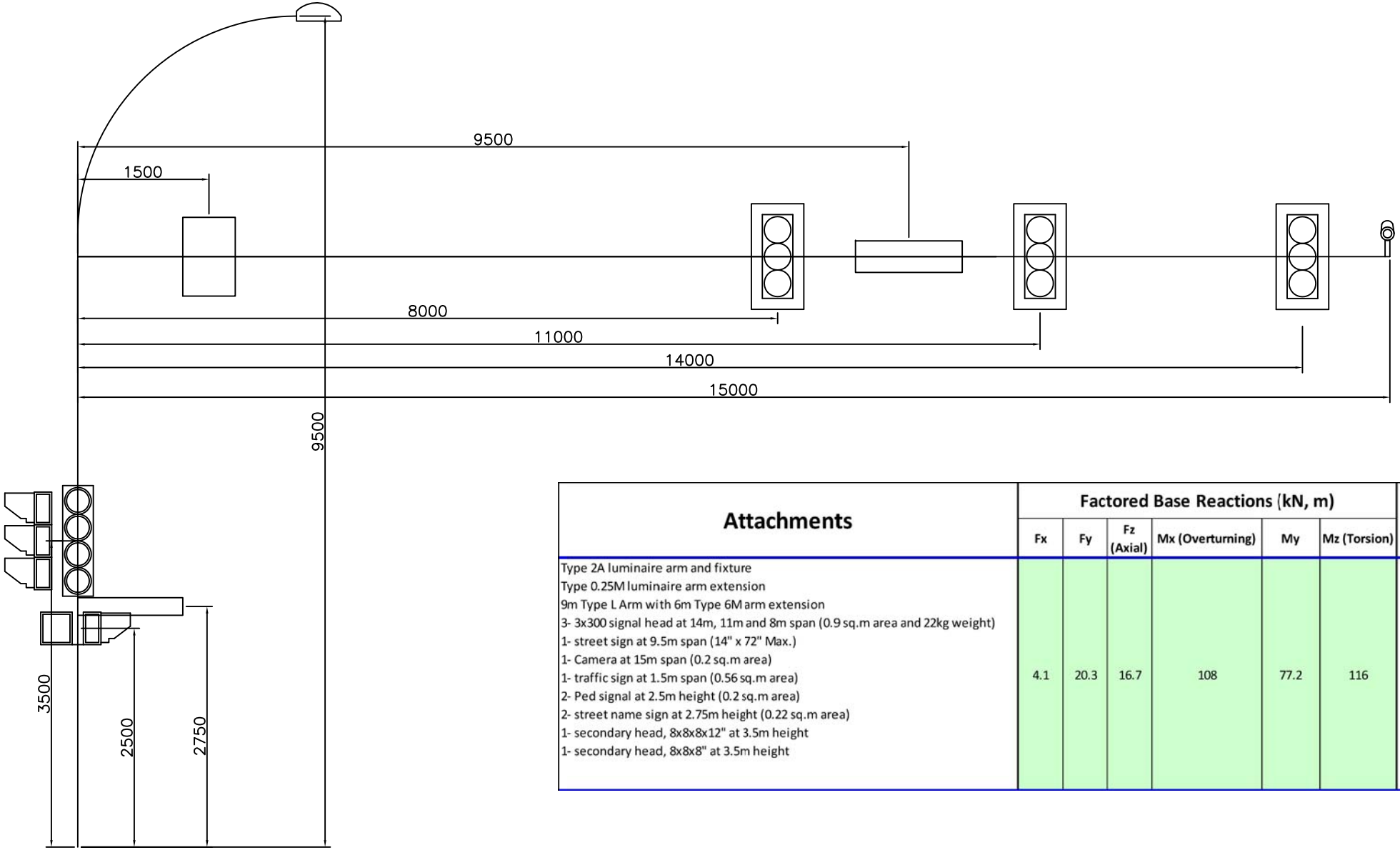

Attachments	Factored Base Reactions (kN, m)						Wind Pressure
	Fx	Fy	Fz (Axial)	Mx (Overturning)	My	Mz (Torsion)	
Type 2A luminaire arm and fixture Type 0.25M luminaire arm extension 9m Type L Arm with 6m Type 6M arm extension 3- 3x300 signal head at 14m, 11m and 8m span (0.9 sq.m area and 22kg weight) 1- street sign at 9.5m span (14" x 72" Max.) 1- Camera at 15m span (0.2 sq.m area) 1- traffic sign at 1.5m span (0.56 sq.m area) 2- Ped signal at 2.5m height (0.2 sq.m area) 2- street name sign at 2.75m height (0.22 sq.m area) 1- secondary head, 8x8x8x12" at 3.5m height 1- secondary head, 8x8x8" at 3.5m height	4.1	20.3	16.7	108	77.2	116	430Pa

Signal Pole – Type M Shaft

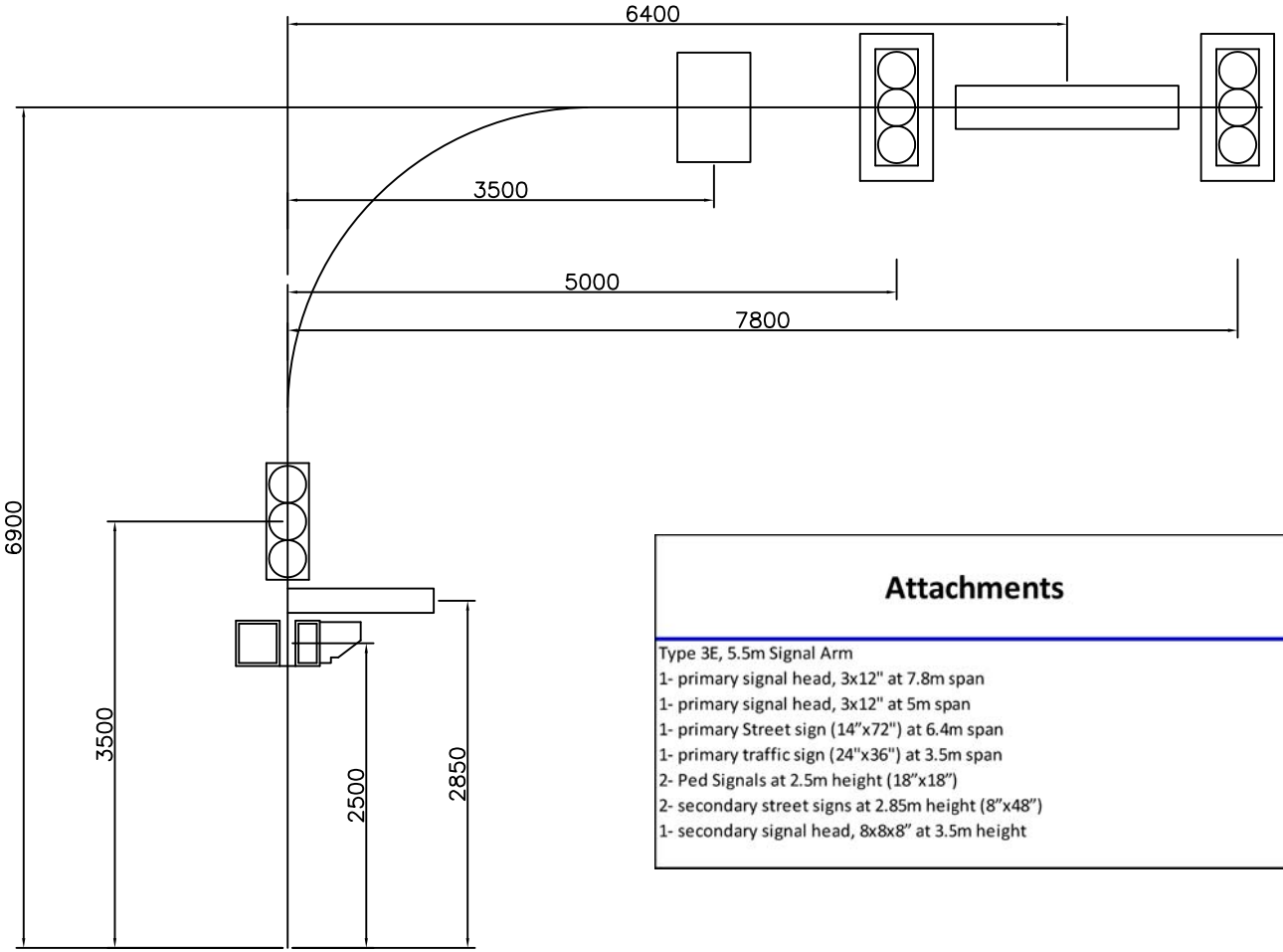

Attachments	Factored Base Reactions (kN, m)						Wind Pressure
	Fx	Fy	Fz (Axial)	Mx (Overturning)	My	Mz (Torsion)	
Type 3E, 5.5m Signal Arm 1- primary signal head, 3x12" at 7.8m span 1- primary signal head, 3x12" at 5m span 1- primary Street sign (14"x72") at 6.4m span 1- primary traffic sign (24"x36") at 3.5m span 2- Ped Signals at 2.5m height (18"x18") 2- secondary street signs at 2.85m height (8"x48") 1- secondary signal head, 8x8x8" at 3.5m height	1.5	7.6	3.7	42	17	28	430Pa

Signal Pole – Type 3 Shaft

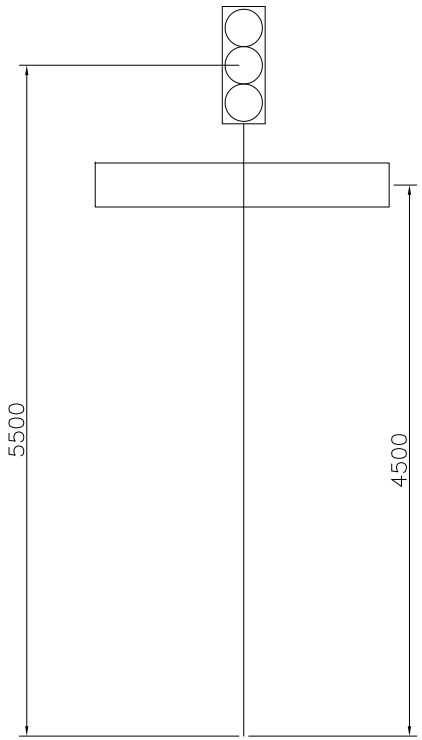

Signal Post – Type 5 Shaft

Attachments	Factored Base Reactions (kN, m)						Wind Pressure
	Fx	Fy	Fz (Axial)	Mx (Overturning)	My	Mz (Torsion)	
1-Primary Head, 3 x 12" at 5.5m height 1-Primary Street Sign (14"x85") at 4.5m height	0.65	3.38	1.17	14.43	3.12	1.3	430Pa

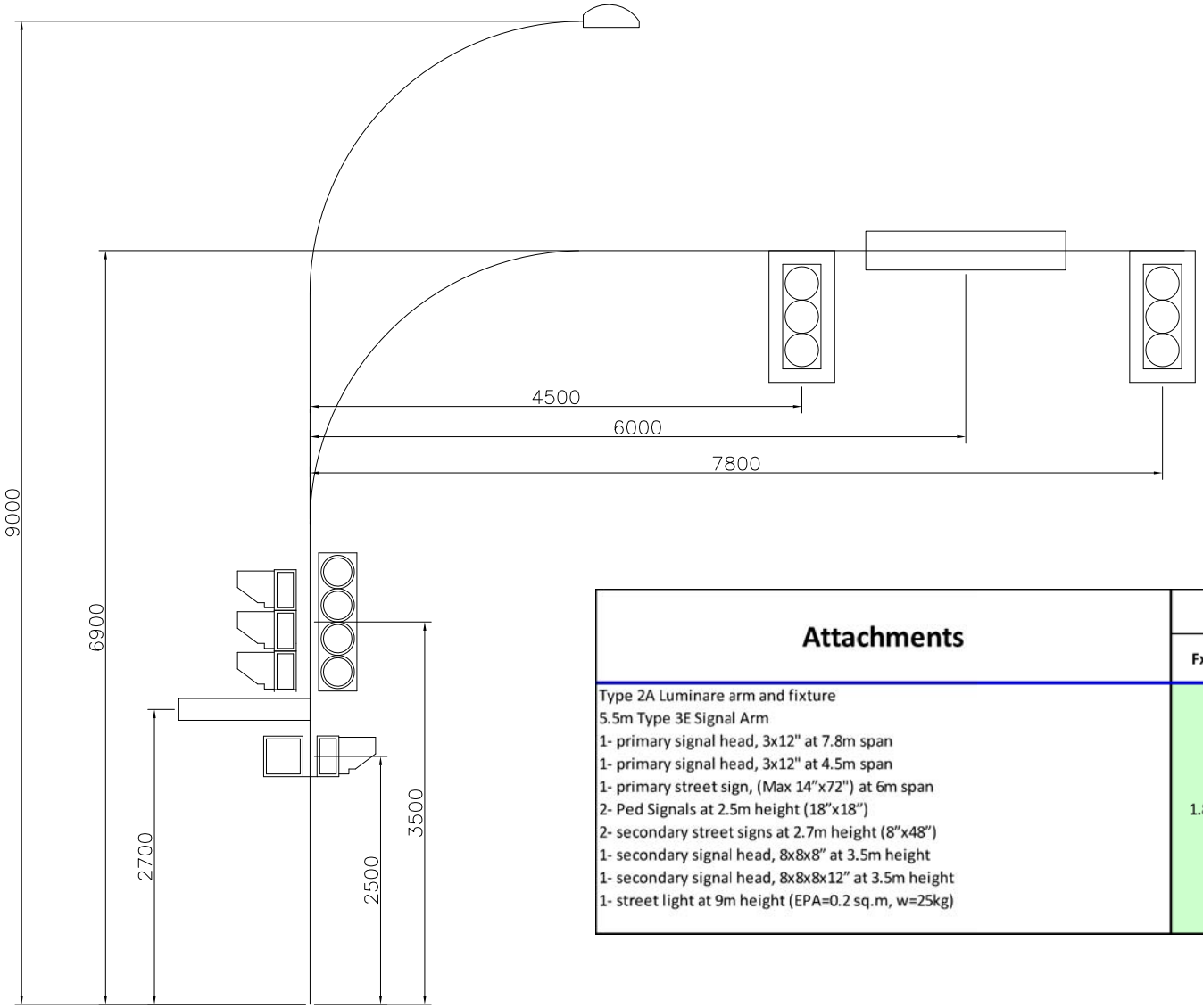

Attachments	Factored Base Reactions (kN, m)						Wind Pressure
	Fx	Fy	Fz (Axial)	Mx (Overturning)	My	Mz (Torsion)	
Type 2A Luminare arm and fixture 5.5m Type 3E Signal Arm 1- primary signal head, 3x12" at 7.8m span 1- primary signal head, 3x12" at 4.5m span 1- primary street sign, (Max 14"x72") at 6m span 2- Ped Signals at 2.5m height (18"x18") 2- secondary street signs at 2.7m height (8"x48") 1- secondary signal head, 8x8x8" at 3.5m height 1- secondary signal head, 8x8x8x12" at 3.5m height 1- street light at 9m height (EPA=0.2 sq.m, w=25kg)	1.8	9	4.6	48	19	27	430Pa

Signal Pole – Type 1 Shaft

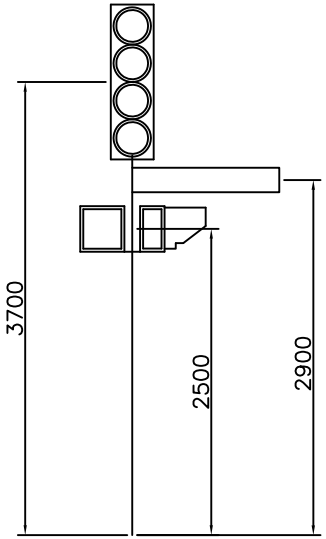

3m Traffic Signal Pole
DWG:107–70–30M04A–F

Attachments	Factored Base Reactions (kN, m)						Wind Pressure
	Fx	Fy	Fz (Axial)	Mx (Overturning)	My	Mz (Torsion)	
2-Ped Heads at 2.5m height (18"x18") 1-Secondary Head, 8x8x8x12" at 3.7m height 2-Secondary Street Signs(8"x48") at 2.9m height	0.5	2.4	1.2	5.8	1.3	0.4	430Pa

Attachment 3 – Pole Base Design Summary

CoV Pole Base Design Summary (2016-10-26)

Type of Base	Depth (m)	Type of pole	Attachements	Factored Load (kN, m)						D/C	Remarks
				Fx	Fy	Fz	Mx	My	Mz		
V1	1.3	3m Traffic Signal Pole	2-Ped Heads 1-Secondary Head, 8x8x8x12" 2-Secondary Street Signs (8x48")	0.5	2.4	1.2	5.8	1.3	0.4	0.64	*The pole bases have been designed for 1/25 years return period wind pressure, whereas the pole and attachements are to be design for 1/50 years return period wind pressure
		Type 4A Signal Post	2-Ped Signals 1-Signal Head, 8x8x8" 2-Street signs (8"x48") 1-Construction Sign (32"x 48")	0.65	3.51	1.95	9.4	2.1	0.26	0.94	
V2	1.8	Type 5 Shaft	1-Primary Head, 3x12" 1-Primary Street Sign (14"x85")	0.65	3.38	1.17	14.43	3.12	1.3	0.55	
		7.6m Single Davit Pole SL	2-32"x60" Banners 2-Secondary Street Signs (8"x48") 2-Flower Baskets 1-Street Light 1-pedestrian light	1.3	6.37	2.53	28.34	7.28	2.21	1.00	
		7.6m Single Davit Pole TS	2-Ped Heads 1-Signal Head, 8x8x8" 1-Signal Head, 8x8x8x12" 2-Street Signs (8"x26") 1-Street Light 1- Construction Sign (32"x 48") 1- Pedestrian Light	1.04	5.1	2.75	21.6	5.4	1.82	0.78	
		7.5m Post Top Luminaire	2-32"x60" Banners 2-Flower Basekets 1-Street Light 2-Street Signs (8"x48")	1.17	5.72	2.1	24.2	5.2	1.04	0.87	
		9.1m Single Davit Pole SL	2-32"x60" Banners 2-Flower Baskets 1-Street Light 1-pedestrian light and 1m Arm	1.3	6.24	3.12	30.29	7.67	2.47	1.03	
		9.1m Single Davit Pole TS	2-Pedestrian Signals 1-Signal Head, 8x8x8" 1-Signal Head, 8x8x8x12" 2-Street signs (8"x48") 1-Street Light 1-Pedstrian Light and 1m Arm 1- Construction Sign (32"x 48")	1.17	5.85	3.8	25.4	6.8	1.95	0.90	
V3	2.0	Type 1 Shaft	Type 2A Luminarire arm 5.5m Type 3E Signal Arm 1-Primary Head, 3-12" 1-Primary Head, 3-12" 1-Primary Street Sign (14"x72") 2-Ped Signals 2-Secondary street signs 1-Secondary head, 8x8x8" 1-Secondary head, 8x8x8x12" 1-Street Light	1.8	9	4.6	48	19	27	0.58	
		Type 3 Shaft	Typ 3E, 5.5m Signal Arm 1-Primary Signal Head, 3x12" 1-Primary Signal Head, 3-12" 1-Primary Street sign (14"x72") 1-Primary Traffic Sign (24"x36") 2-Ped Signal (18"x18") 2-Secondary Street Signs (8"x48") 1-Secondary Signal Head, 8x8x8"	1.5	7.6	3.7	42	17	28	0.52	
V4	2.2	Type S	Type 2A Luminaire Arm Type 0.25L Luminaire Arm Extension 10.5m Type S Arm 1-Street Name Sign (7"x48") 2-Secondary Head, 8x8x8x12" 1-Sign (24"x36") 1-4x300 Signal Head 1-3x300 Signal Head 1-Sign (24"x36") 1-Camera 2-Ped Signal (18"x18") 1-Primary Sign (14"x72")	3	15	9.2	85	38	58	0.75	
V5	2.2	Type L	Type 2A Luminaire Arm Type 0.25L Luminaire Arm Extension 11m Type L Arm with 3m Type 3LE extension 1-4x300 Signal Head 1-3x300 Signal Head 1-3x300 Signal Head 1-Camera 2-Ped Signal (18"x18") 1-Street Name Sign 2-Secondary Head 1-Sign (24"x36") 1-Primary Street Name Sign (14"x72")	3.2	16	12	91	61	78	0.84	
V6	2.7	Type M	Type 2A Luminaire Arm Type 0.25M Luminaire Arm Extension 9m Type L Arm with 6m Type 6M arm extension 3-3x300 Sginal Head 1-Street Sign (14"x72") 1-Camera 1-Traffic Sign 2-Ped Signal 2-Street Name Sign 1-Secondary Head, 8x8x8x12" 1-Secondary Head, 8x8x8"	4.1	20.3	16.7	108	77.2	116	0.59	

Attachment 4 – CoV Standard Pole Base Drawings

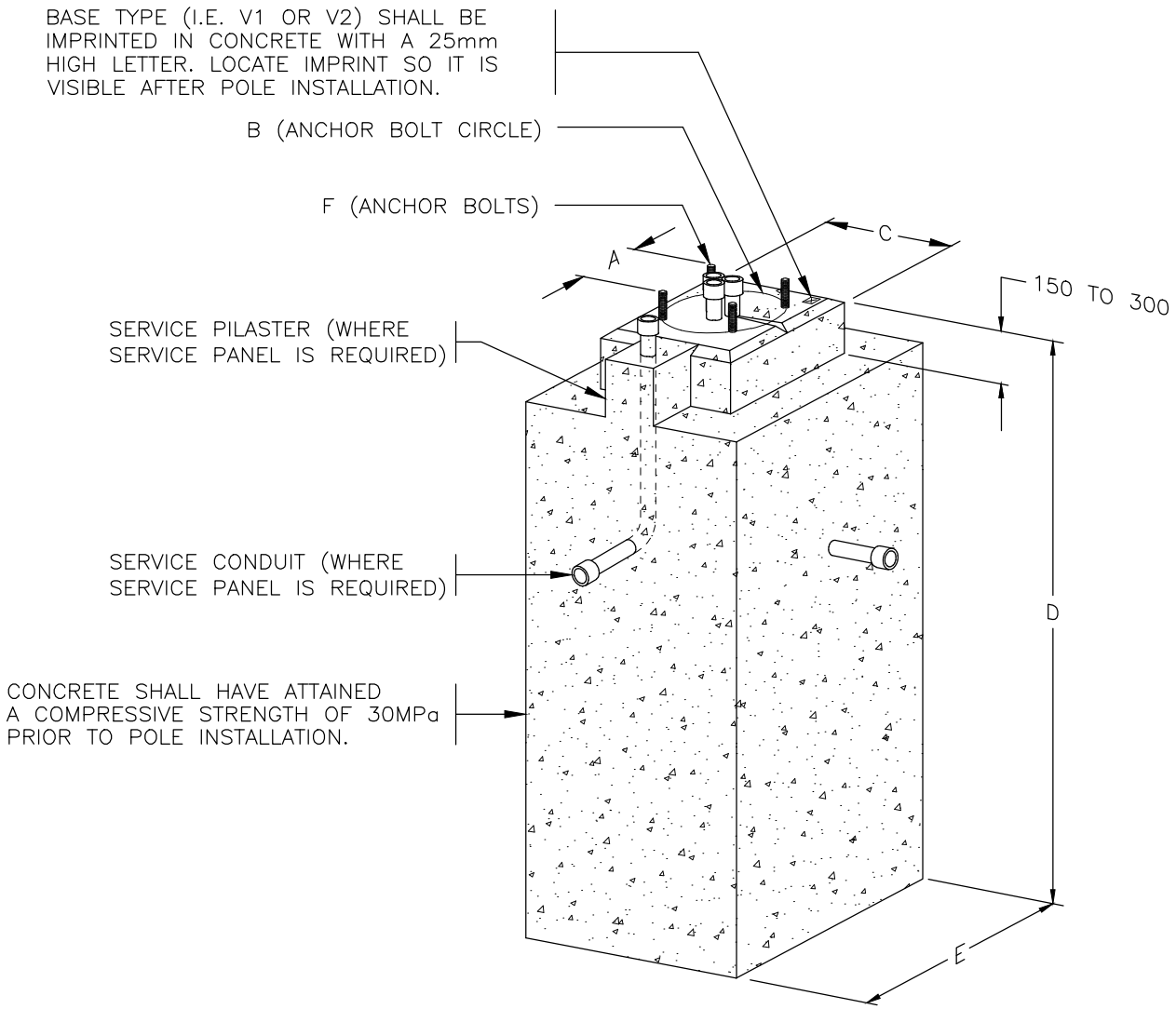

CONCRETE BASES

BASE TYPE	POLE TYPE	A	B	C	D	E	F (ANCHOR BOLTS)	VOLUME OF CONCRETE	APPROXIMATE MASS
V1	3.0m TRAFFIC SIGNAL POLES & TYPE 4A SIGNAL POSTS	197	280	350	1300	600	4–1"ø x 915mm LONG AISI / SAE 4140 BOLTS	0.43 m^3	1080 kg
V2	TYPE 5 SHAFTS & 7.5m POST TOP LUMINAIRE POLES & 7.6m, 9.1m DAVIT LUMINAIRE POLES	197	280	350	1800	600	4–1"ø x 915mm LONG AISI / SAE 4140 BOLTS	0.61 m^3	1530 kg

NOTES

1. REFER TO CONTRACT DRAWINGS, MMCD AND CITY SUPPLEMENTAL SPECIFICATIONS FOR FURTHER INFORMATION.
2. ALL DIMENSIONS ARE IN MILLIMETRES UNLESS OTHERWISE NOTED.

CITY OF VANCOUVER

ELEVATIONS & COORDINATES SHOWN ON THIS PLAN ARE IN METRES BASED ON G.V.R.D. NAD83 DATUM

ENGINEERING SERVICES

DIV./BR. TRAFFIC MANAGEMENT T.S. ELECTRICAL

DATE: MAY 20, 2016 DESIGN: MMM

DWG: CHK: MMM

REFS:

V1 & V2
POURED IN PLACE
CONCRETE BASES

SCALE: NOT TO SCALE

DIRECTORY:

DWG. NO. V1.1

SHEET 1 OF 1 REVISION: 0

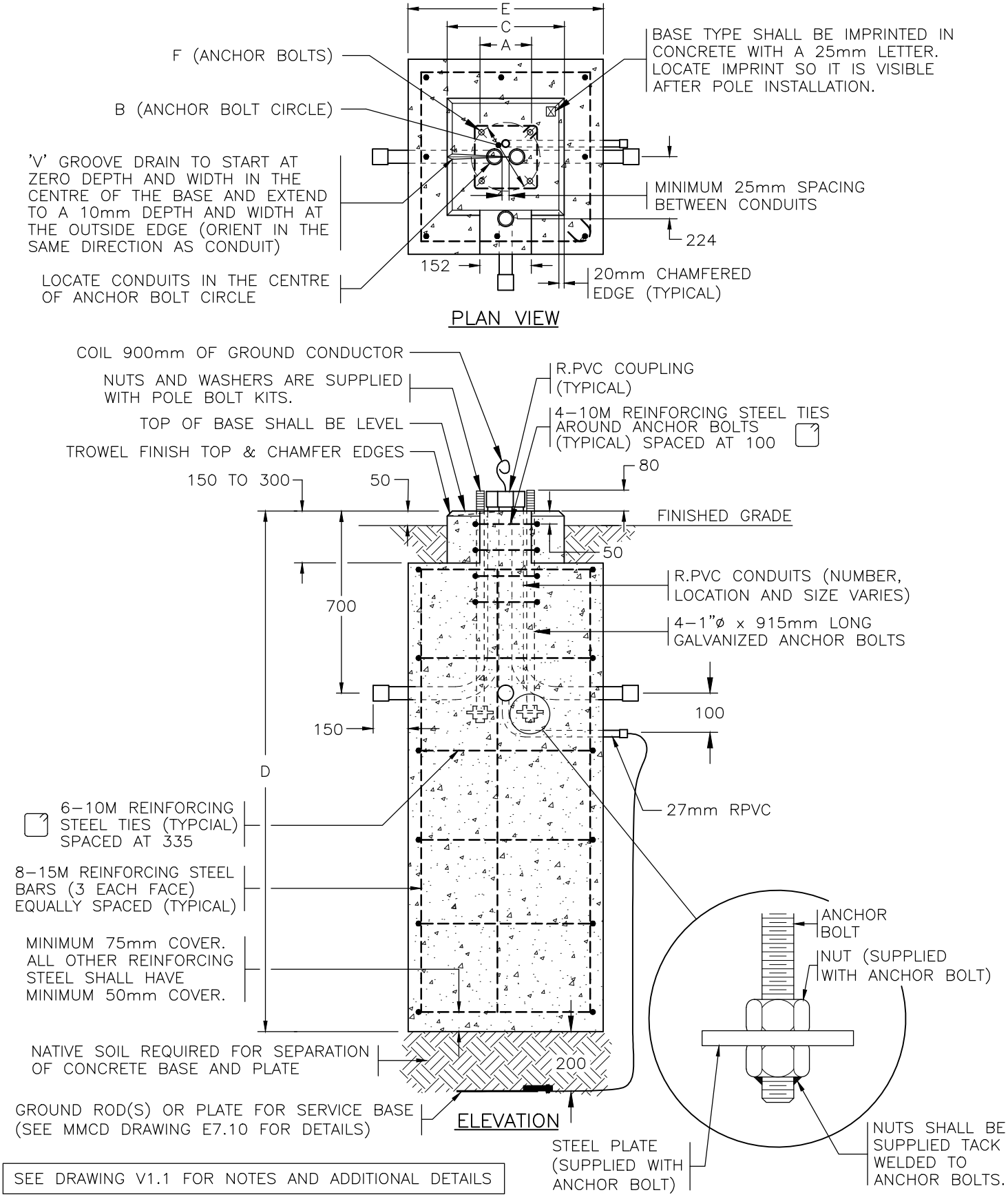

SEE DRAWING V1.1 FOR NOTES AND ADDITIONAL DETAILS

CITY OF VANCOUVER	ENGINEERING SERVICES		
ELEVATIONS & COORDINATES SHOWN ON THIS PLAN ARE IN METRES BASED ON G.V.R.D. NAD83 DATUM	DIV./BR. TRAFFIC MANAGEMENT T.S. ELECTRICAL	V1 & V2 POURED IN PLACE CONCRETE BASES	SCALE: NOT TO SCALE
	DATE: MAY 20, 2016 / DESIGN: MMM		DIRECTORY:
	DWG: / CHK: MMM		DWG. NO. V1.2
	REFS:		SHEET 1 OF 1 / REVISION: 0

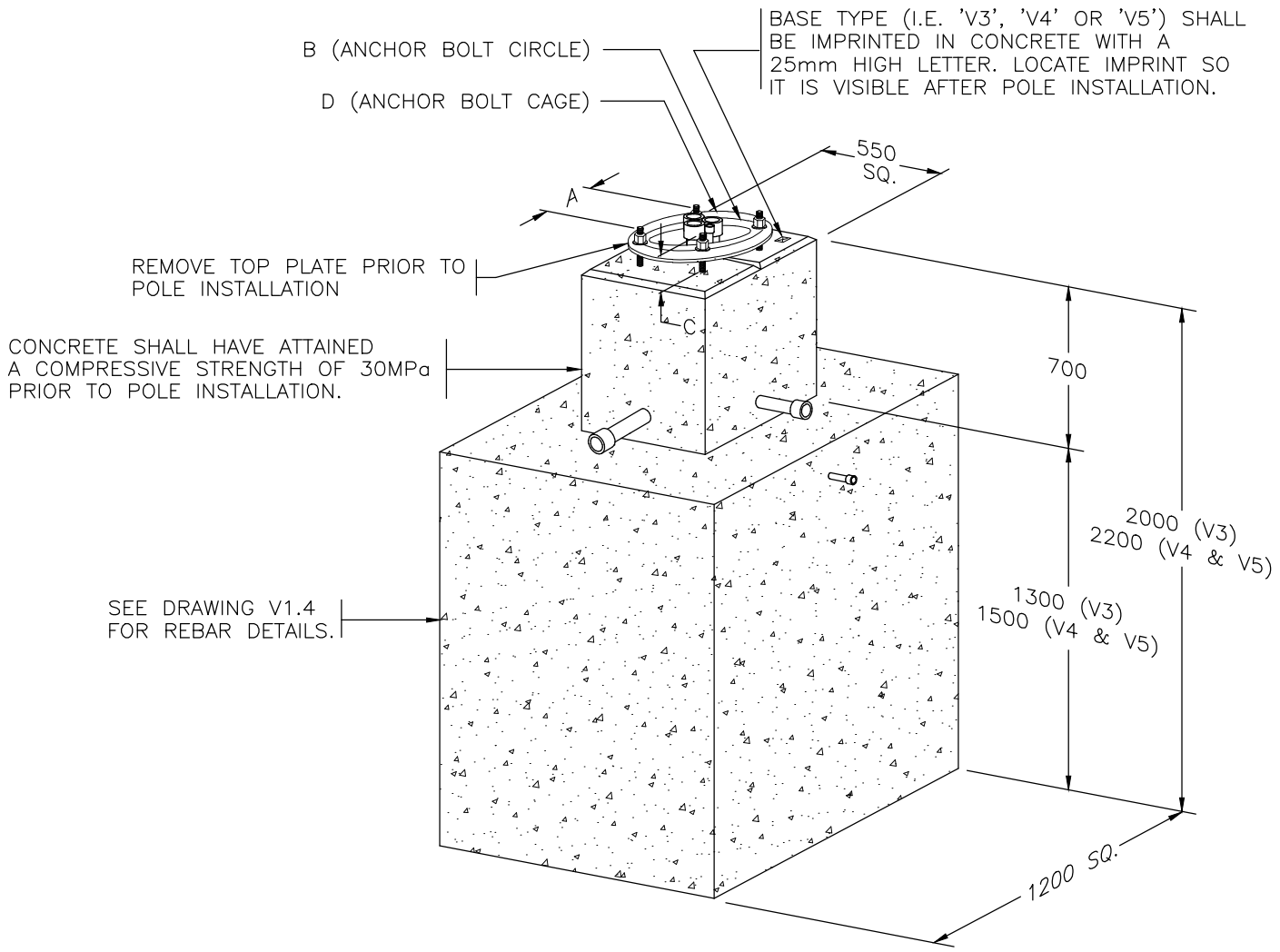

POURED IN PLACE CONCRETE BASES

BASE TYPE	POLE TYPE	A	B	C	D (ANCHOR BOLTS)	VOLUME OF CONCRETE	APPROXIMATE MASS
V3	TYPE 1 AND 3 SHAFTS	197	280	80	4–1"ø x 36" (915) GALVANIZED AISI / SAE 4140 BOLTS	2.08 m^3	5206 kg
V4	TYPE S POLES	243	343	160	4–1"ø x 48" (1220) GALVANIZED GRADE 150 DYWIDAG BOLTS PRE–ASSEMBLED IN A CAGE	2.37 m^3	5925 kg
V5	TYPE L POLES	276	390	140	4–1 1/2"ø x 54" (1370) GALVANIZED AISI / SAE 4140 BOLTS PRE–ASSEMBLED IN A CAGE	2.37 m^3	5925 kg

NOTES

1. REFER TO CONTRACT DRAWINGS, MMCD AND CITY SUPPLEMENTAL SPECIFICATIONS FOR FURTHER INFORMATION.
2. ALL DIMENSIONS ARE IN MILLIMETRES UNLESS OTHERWISE NOTED.

CITY OF VANCOUVER

ELEVATIONS & COORDINATES SHOWN ON THIS PLAN ARE IN METRES BASED ON G.V.R.D. NAD83 DATUM

ENGINEERING SERVICES

DIV./BR. TRAFFIC MANAGEMENT T.S. ELECTRICAL

DATE: MAY 20, 2016 DESIGN: MMM

DWG: CHK: MMM

REFS:

V3, V4 & V5 POURED IN PLACE CONCRETE BASES

SCALE: NOT TO SCALE

DIRECTORY:

DWG. NO. V1.3

SHEET 1 OF 1 REVISION: 0

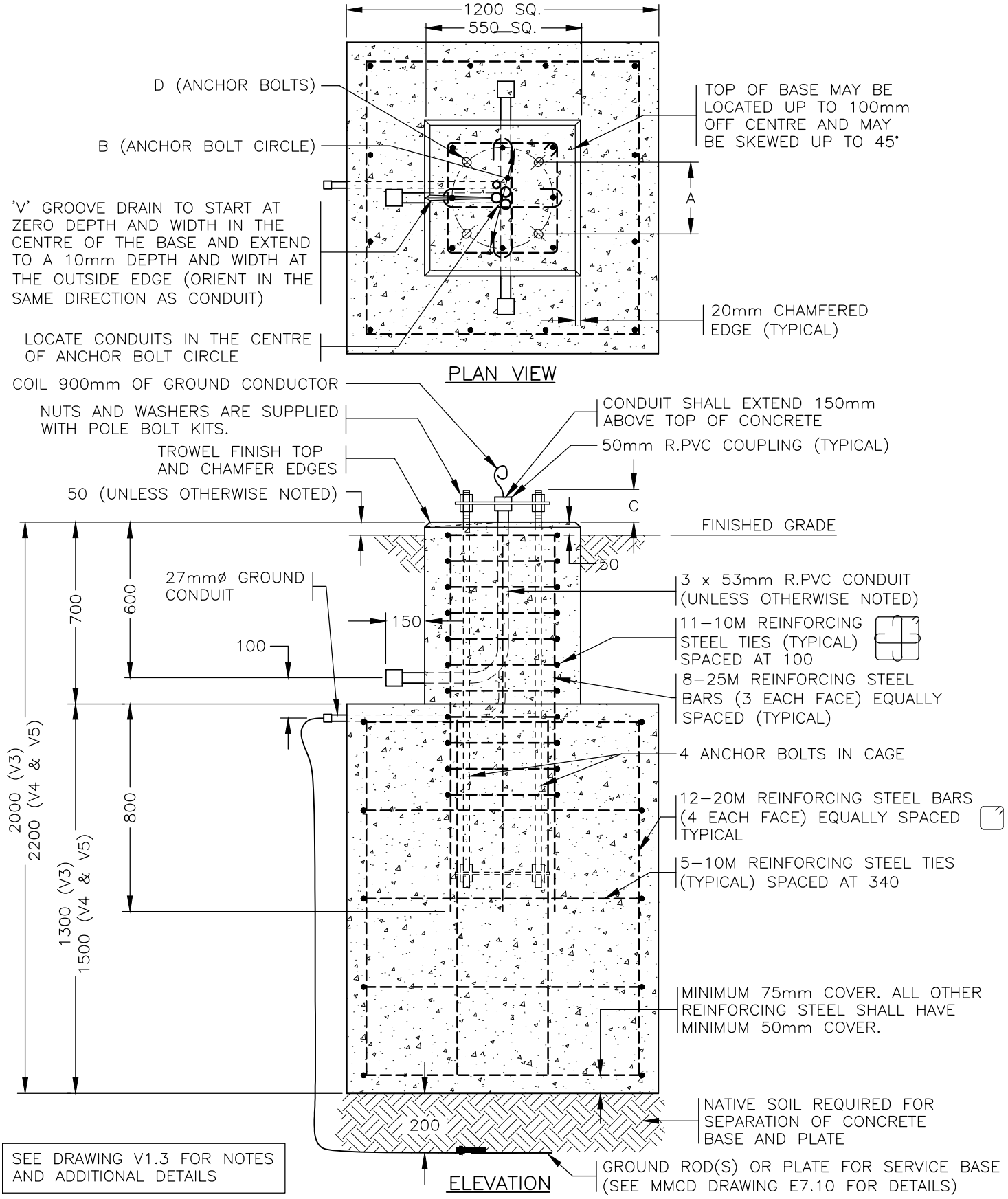

SEE DRAWING V1.3 FOR NOTES AND ADDITIONAL DETAILS

CITY OF VANCOUVER	ENGINEERING SERVICES		
ELEVATIONS & COORDINATES SHOWN ON THIS PLAN ARE IN METRES BASED ON G.V.R.D. NAD83 DATUM	DIV./BR. TRAFFIC MANAGEMENT T.S. ELECTRICAL	V3, V4 & V5 POURED IN PLACE CONCRETE BASES	SCALE: NOT TO SCALE
	DATE: MAY 20, 2016 / DESIGN: MMM		DIRECTORY:
	DWG: / CHK: MMM		DWG. NO. V1.4
	REFS:		SHEET 1 OF 1 / REVISION: 0

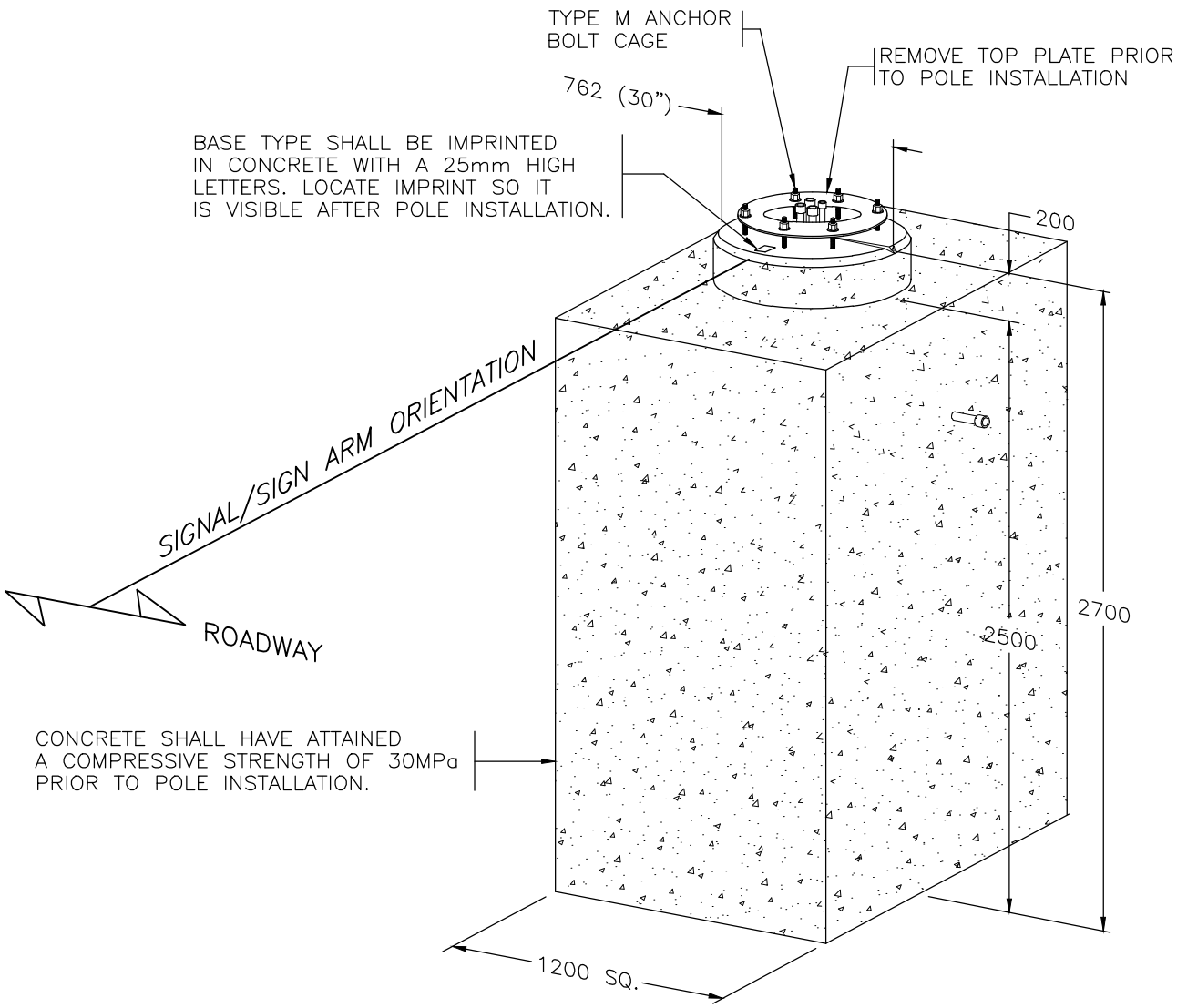

CONCRETE BASE

BASE TYPE	POLE TYPE	ANCHOR BOLTS	VOLUME OF CONCRETE	APPROXIMATE MASS
V6	TYPE M POLES	ANCHOR BOLTS SHALL BE INCLUDED (6–1 1/2"ø GALVANIZED AISI/SAE 4140 BOLTS SHALL BE SUPPLIED IN PRE–ASSEMBLED CAGE)	3.69 m^3	9221 kg

NOTES

1. REFER TO CONTRACT DRAWINGS, MMCD AND CITY SUPPLEMENTAL SPECIFICATIONS FOR FURTHER INFORMATION.
2. SEE PLANS FOR SIGNAL/SIGN ARM ORIENTATION.
3. ALL DIMENSIONS ARE IN MILLIMETRES UNLESS OTHERWISE NOTED.

CITY OF VANCOUVER	ENGINEERING SERVICES			
ELEVATIONS & COORDINATES SHOWN ON THIS PLAN ARE IN METRES BASED ON G.V.R.D. NAD83 DATUM	DIV./BR. TRAFFIC MANAGEMENT T.S. ELECTRICAL	V6 POURED IN PLACE CONCRETE BASE	SCALE: NOT TO SCALE	
	DATE: MAY 20, 2016 / DESIGN: MMM		DIRECTORY:	
	DWG: / CHK: MMM		DWG. NO. V1.5	
	REFS:		SHEET 1 OF 1	REVISION: 0

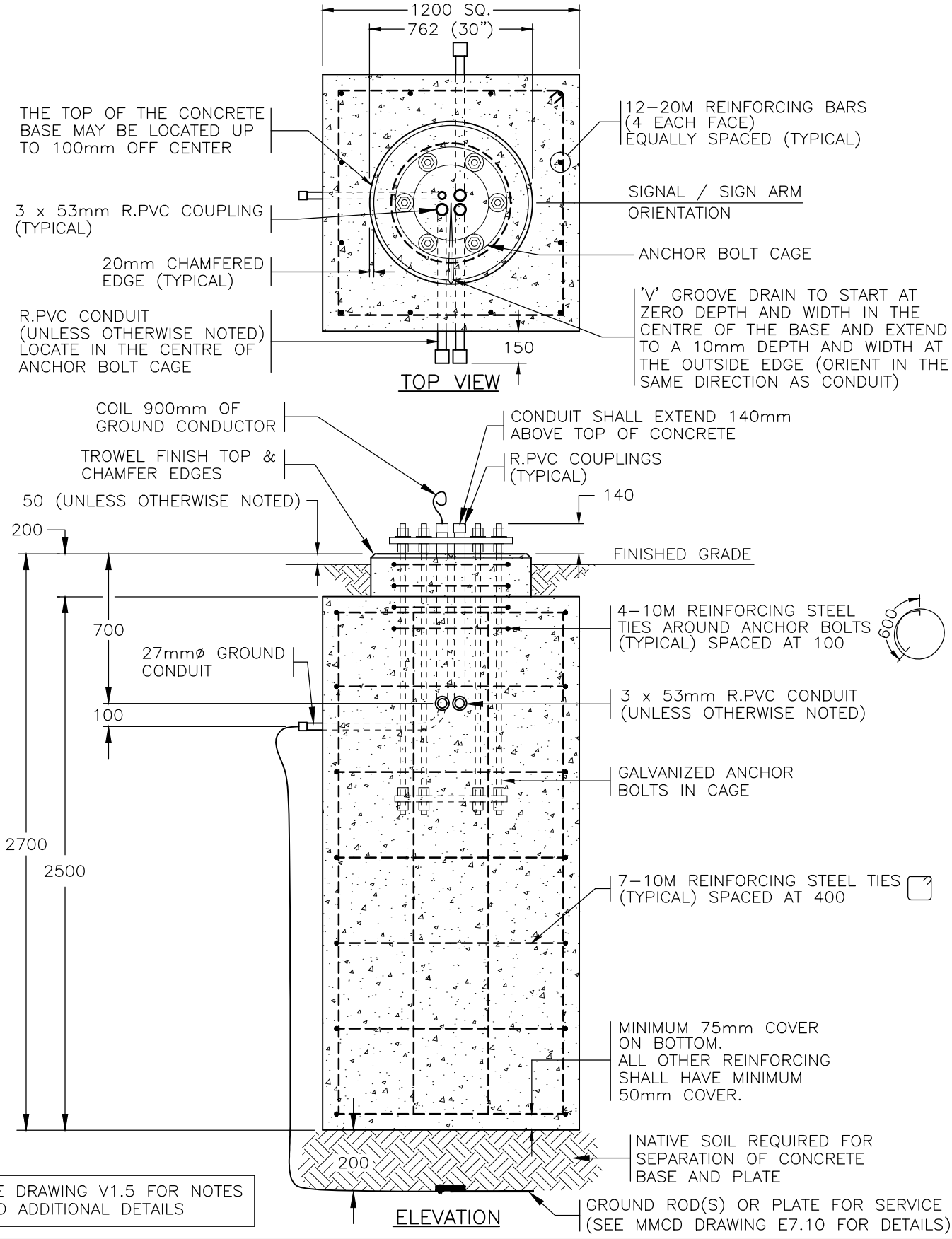

CITY OF VANCOUVER

ELEVATIONS & COORDINATES SHOWN ON THIS PLAN ARE IN METRES BASED ON G.V.R.D. NAD83 DATUM

ENGINEERING SERVICES

DIV./BR. TRAFFIC MANAGEMENT T.S. ELECTRICAL	V6 POURED IN PLACE CONCRETE BASE	SCALE: NOT TO SCALE
DATE: MAY 20, 2016 DESIGN: MMM		DIRECTORY:
DWG: CHK: MMM		DWG. NO. V1.6
REFS:		SHEET 1 OF 1 REVISION: 0

Type of Base	Depth (m)	Type of pole	Attachements	Factored Load (kN, m)						D/C
				Fx	Fy	Fz	Mx	My	Mz	
V1	1.3	3m Traffic Signal Pole	2-Ped Heads 1-Secondary Head, 8x8x8x12" 2-Secondary Street Signs (8x48")	0.5	2.4	1.2	5.8	1.3	0.4	0.64
		Type 4A Signal Post	2-Ped Signals 1-Signal Head, 8x8x8" 2-Street signs (8"x48") 1-Construction Sign (32"x 48")	0.65	3.51	1.95	9.4	2.1	0.26	0.94
V2	1.8	Type 5 Shaft	1-Primary Head, 3x12" 1-Primary Street Sign (14"x85")	0.65	3.38	1.17	14.43	3.12	1.3	0.55
		7.6m Single Davit Pole SL	2-32"x60" Banners 2-Secondary Street Signs (8"x48") 2-Flower Baskets 1-Street Light 1-pedestrian light	1.3	6.37	2.53	28.34	7.28	2.21	1.00
		7.6m Single Davit Pole TS	2-Ped Heads 1-Signal Head, 8x8x8" 1-Signal Head, 8x8x8x12" 2-Street Signs (8"x26") 1-Street Light 1- Construction Sign (32"x 48") 1- Pedestrian Light	1.04	5.1	2.75	21.6	5.4	1.82	0.78
		7.5m Post Top Luminaire	2-32"x60" Banners 2-Flower Basekets 1-Street Light 2-Street Signs (8"x48")	1.17	5.72	2.1	24.2	5.2	1.04	0.87
		9.1m Single Davit Pole SL	2-32"x60" Banners 2-Flower Baskets 1-Street Light 1-pedestrian light and 1m Arm	1.3	6.24	3.12	30.29	7.67	2.47	1.03
		9.1m Single Davit Pole TS	2-Pedestrian Signals 1-Signal Head, 8x8x8" 1-Signal Head, 8x8x8x12" 2-Street signs (8"x48") 1-Street Light 1-Pedstrian Light and 1m Arm 1- Construction Sign (32"x 48")	1.17	5.85	3.8	25.4	6.8	1.95	0.90
V3	2.0	Type 1 Shaft	Type 2A Luminarire arm 5.5m Type 3E Signal Arm 1-Primary Head, 3-12" 1-Primary Head, 3-12" 1-Primary Street Sign (14"x72") 2-Ped Signal (18"x18") 2-Secondary street signs 1-Secondary head, 8x8x8" 1-Secondary head, 8x8x8x12" 1-Street Light	1.8	9	4.6	48	19	27	0.58
		Type 3 Shaft	Typ 3E, 5.5m Signal Arm 1-Primary Signal Head, 3x12" 1-Primary Signal Head, 3-12" 1-Primary Street sign (14"x72") 1-Primary Traffic Sign (24"x36") 2-Ped Signal (18"x18") 2-Secondary Street Signs (8"x48") 1-Secondary Signal Head, 8x8x8"	1.5	7.6	3.7	42	17	28	0.52
V4	2.2	Type S	Type 2A Luminaire Arm Type 0.25L Luminaire Arm Extension 10.5m Type S Arm 1-Street Name Sign (7"x48") 2-Secondary Head, 8x8x8x12" 1-Sign (24"x36") 1-4x300Signal Head 1-3x300 Signal Head 1-Sign (24"x36") 1-Camera 2-Ped Signal (18"x18") 1-Primary Sign (14"x72")	3	15	9.2	85	38	58	0.75
V5	2.2	Type L	Type 2A Luminaire Arm Type 0.25L Luminaire Arm Extension 11m Type L Arm with 3m Type 3LE Arm Extension 1-4x300 Signal Head 1-3x300 Signal Head 1-3x300 Signal Head 1-Camera 2-Ped Signal (18"x18") 1-Street Name Sign 2-Secondary Head 1-Sign (24"x36") 1-Primary Street Name Sign (14"x72")	3.2	16	12	91	61	78	0.84
V6	2.7	Type M	Type 2A Luminaire Arm Type 0.25M Luminaire Arm Extension 9m Type L Arm with 6m Type 6M Arm Extension 3-3x300 Sginal Head 1-Street Sign (14"x72") 1-Camera 1-Traffic Sign 2-Ped Signal 2-Street Name Sign 1-Secondary Head, 8x8x8x12" 1-Secondary Head, 8x8x8"	4.1	2.03	16.7	108	77.2	116	0.59

CITY OF VANCOUVER

ELEVATIONS & COORDINATES SHOWN ON THIS PLAN ARE IN METRES BASED ON G.V.R.D. NAD83 DATUM

ENGINEERING SERVICES

DIV./BR. TRAFFIC MANAGEMENT T.S. ELECTRICAL

DATE: MAY 20, 2016 DESIGN: MMM

DWG: CHK: MMM

REFS:

MAXIMUM POLE BASE LOADING

SCALE: NOT TO SCALE

DIRECTORY:

DWG. NO. V1.7

SHEET 1 OF 1 REVISION: 0

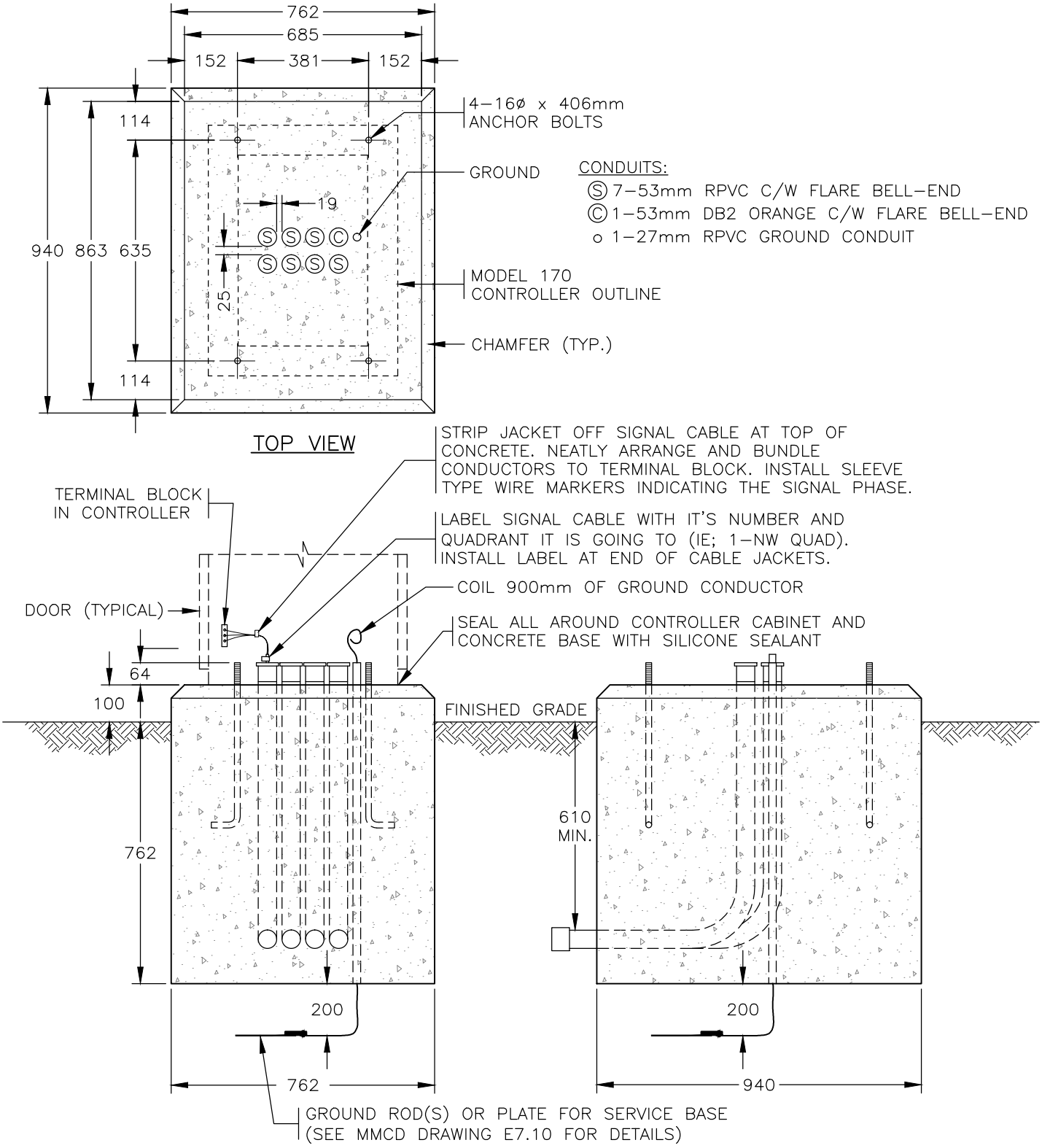

NOTES

1. REFER TO CONTRACT DRAWINGS, MMCD AND CITY SUPPLEMENTAL SPECIFICATIONS FOR FURTHER INFORMATION.
2. ALL DIMENSIONS ARE IN MILLIMETRES UNLESS OTHERWISE NOTED.

CITY OF VANCOUVER	ENGINEERING SERVICES			
ELEVATIONS & COORDINATES SHOWN ON THIS PLAN ARE IN METRES BASED ON G.V.R.D. NAD83 DATUM	DIV./BR. TRAFFIC MANAGEMENT T.S. ELECTRICAL	POURED IN PLACE CONCRETE CONTROLLER BASE	SCALE: NOT TO SCALE	
	DATE: MAY 20, 2016 / DESIGN: MMM		DIRECTORY:	
	DWG: / CHK: MMM		DWG. NO. V1.8	
	REFS:		SHEET 1 OF 1	REVISION: 0

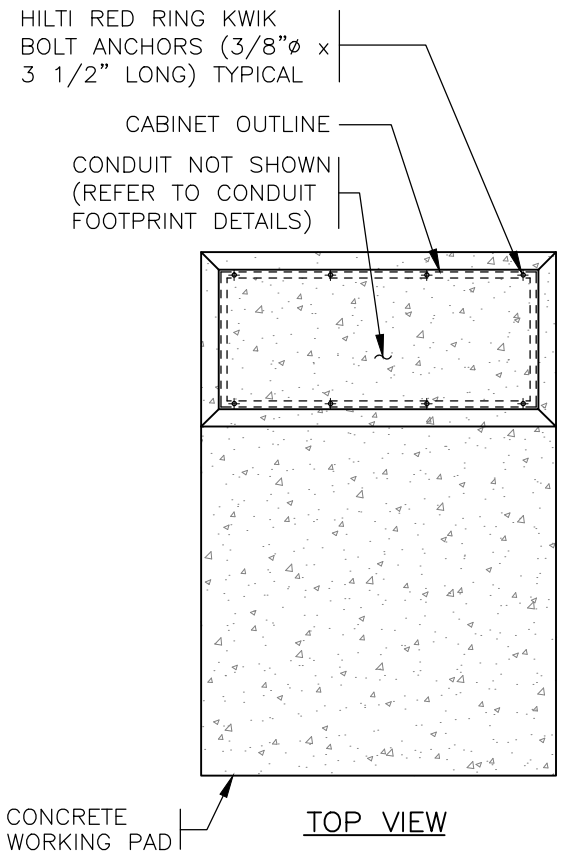

TOP VIEW

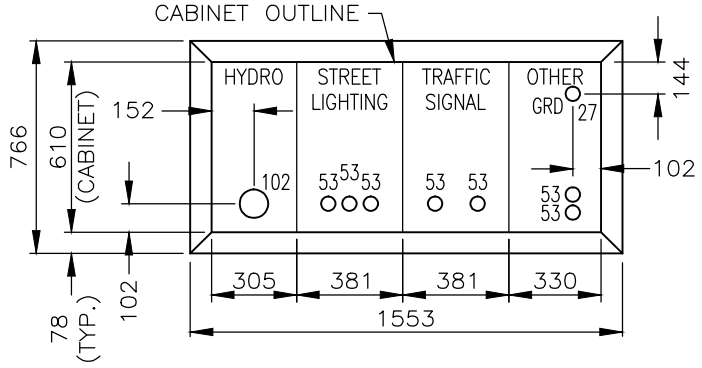

SMALL/MEDIUM ELECTRICAL CABINET FOOTPRINT

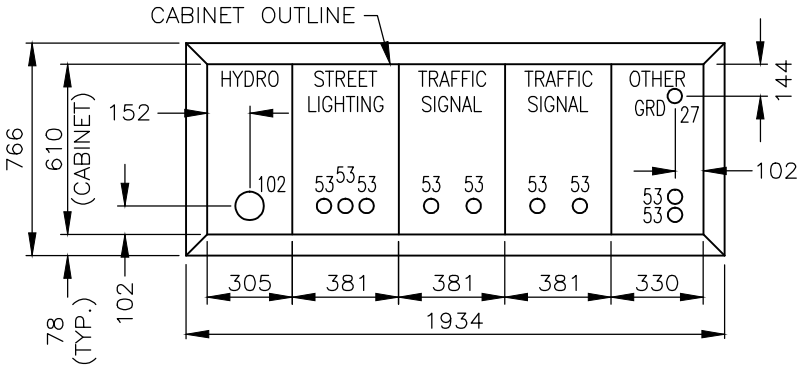

LARGE ELECTRICAL CABINET FOOTPRINT

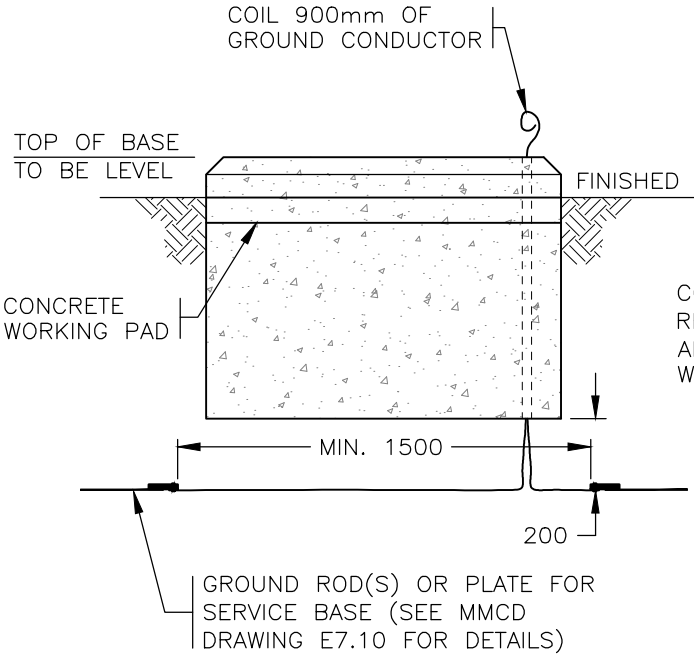

FRONT VIEW

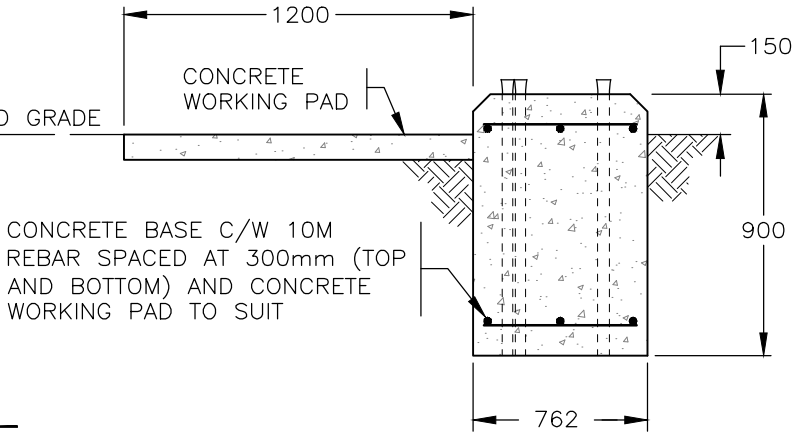

SIDE VIEW

NOTES

1. REFER TO CONTRACT DRAWINGS, MMCD AND CITY SUPPLEMENTAL SPECIFICATIONS FOR FURTHER INFORMATION.
2. ALL DIMENSIONS ARE IN MILLIMETRES UNLESS OTHERWISE NOTED.

CITY OF VANCOUVER	ENGINEERING SERVICES			
	DIV./BR. TRAFFIC MANAGEMENT T.S. ELECTRICAL	POURED IN PLACE CONCRETE BASE FOR CABINETS	SCALE: NOT TO SCALE	
ELEVATIONS & COORDINATES SHOWN ON THIS PLAN ARE IN METRES BASED ON G.V.R.D. NAD83 DATUM	DATE: MAY 20, 2016 / DESIGN:DMD/COV		DIRECTORY:	
	DWG: / CHK: DMD		DWG. NO.	V1.9
	REFS:		SHEET 1 OF 1	REVISION: 0

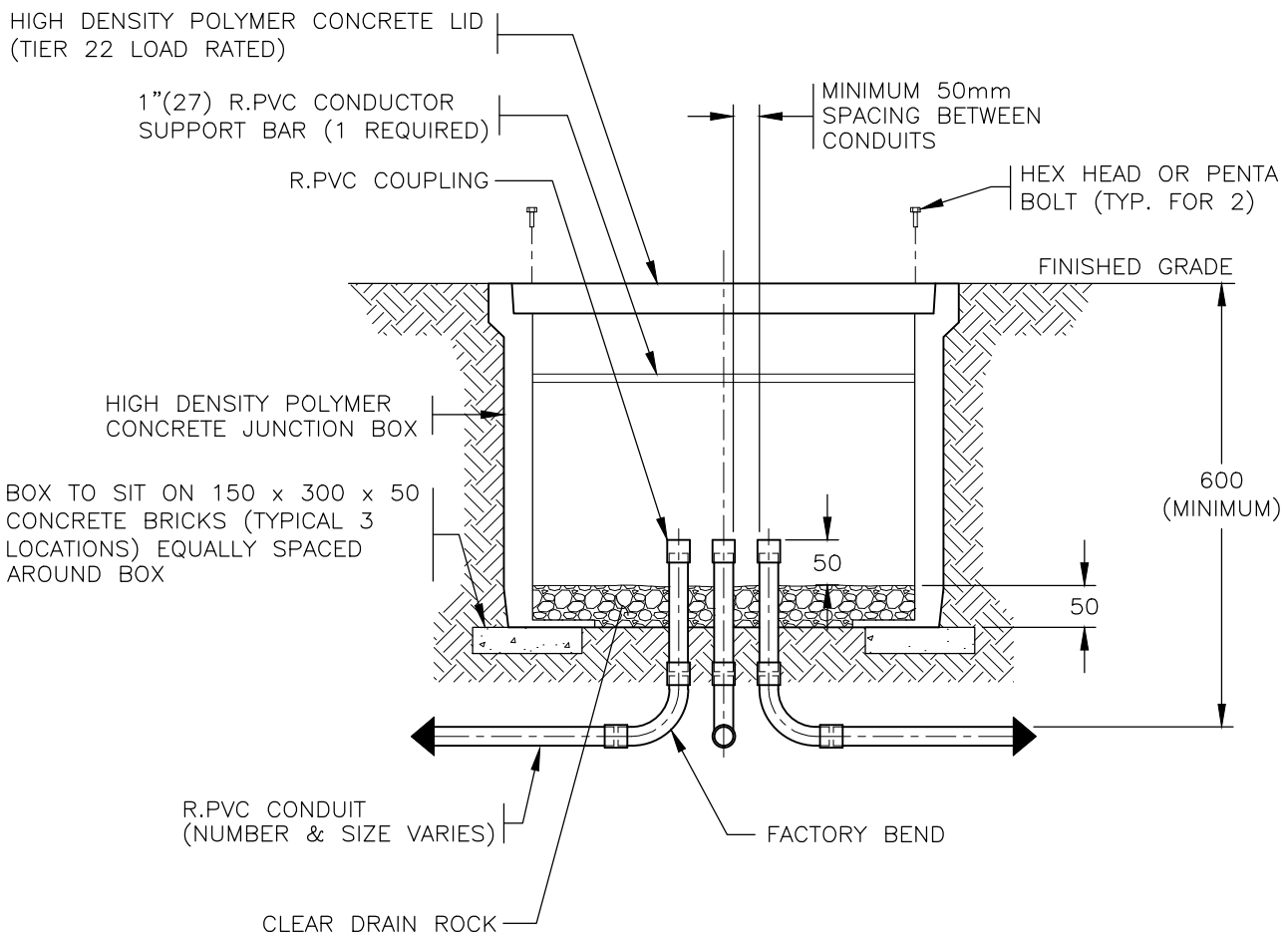

ELEVATION

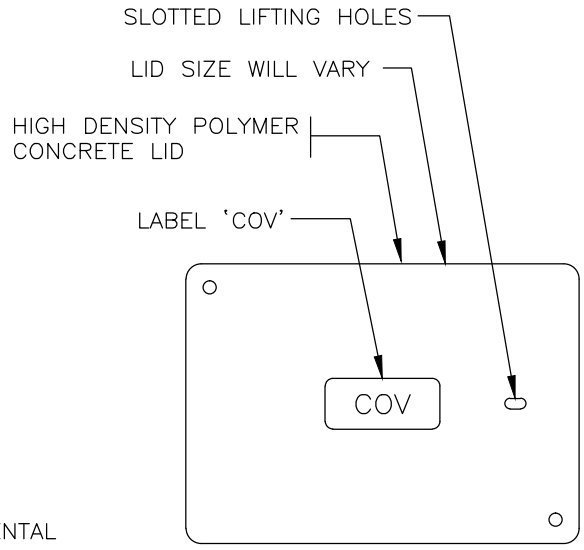

NOTES

1. REFER TO CONTRACT DRAWINGS, MMCD AND CITY SUPPLEMENTAL SPECIFICATIONS FOR FURTHER INFORMATION.
2. ALL DIMENSIONS ARE IN MILLIMETRES UNLESS OTHERWISE NOTED.

CITY OF VANCOUVER	ENGINEERING SERVICES			
ELEVATIONS & COORDINATES SHOWN ON THIS PLAN ARE IN METRES BASED ON G.V.R.D. NAD83 DATUM	DIV./BR. TRAFFIC MANAGEMENT T.S. ELECTRICAL	JUNCTION BOXES (TIER 22 RATED)	SCALE: NOT TO SCALE	
	DATE: MAY 20, 2016 / DESIGN: DMD		DIRECTORY:	
	DWG: / CHK: DMD		DWG. NO. V2.1	
	REFS:		SHEET 1 OF 1	REVISION: 0

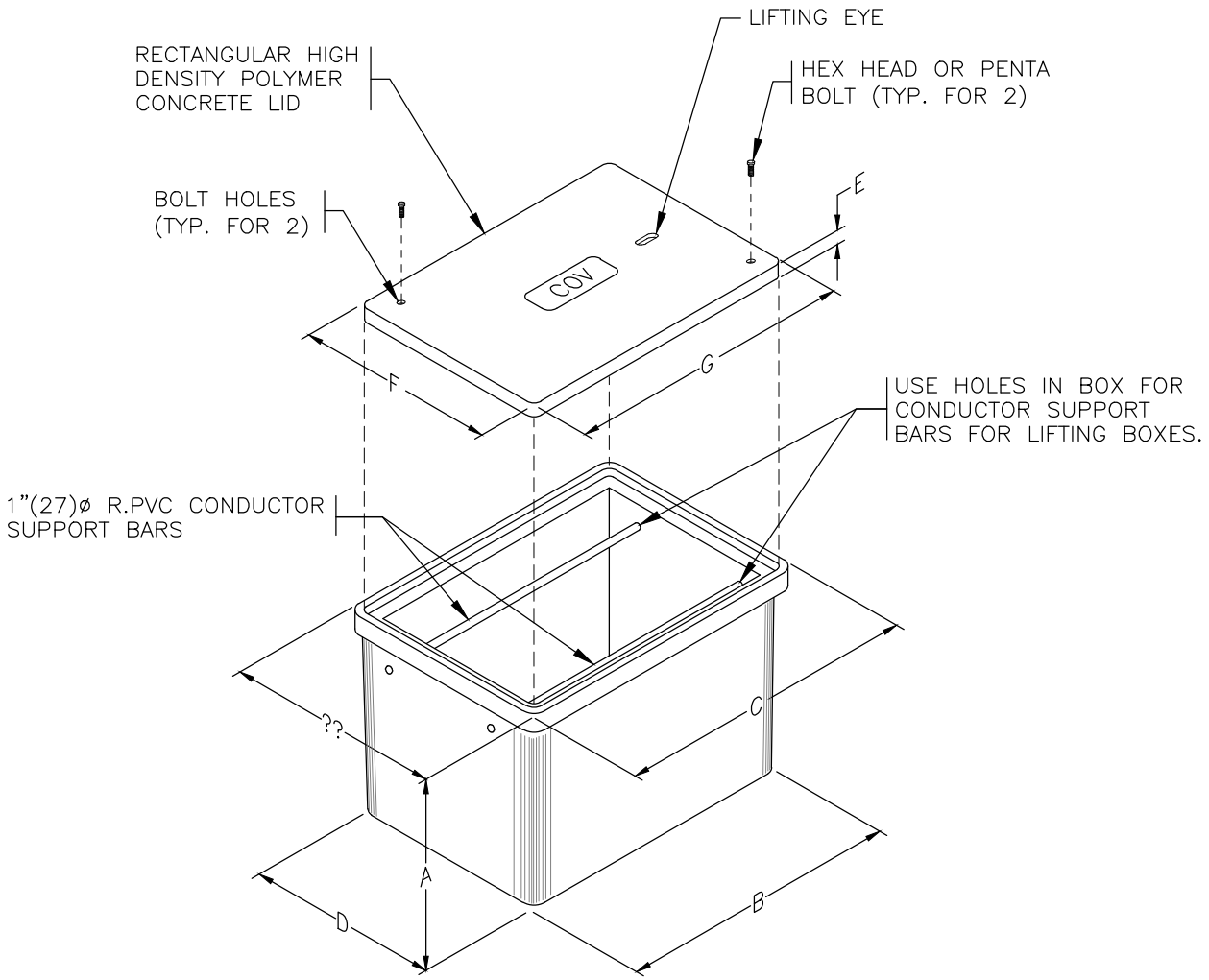

CONCRETE JUNCTION BOX

JUNCTION BOX TYPE	A	B	C	D	E	F	G
TYPE 3 (11"x18"x18")	457	432	508	292	26	280	457
TYPE 4 (13"x24"x18")	457	534	636	356	50	331	584
TYPE 5 (17"x30"x24")	610	763	814	433	50	432	763
TYPE 6 (24"x36"x24")	610	889	941	585	75	610	890

NOTES

1. REFER TO CONTRACT DRAWINGS, MMCD AND CITY SUPPLEMENTAL SPECIFICATIONS FOR FURTHER INFORMATION.
2. ALL DIMENSIONS ARE IN MILLIMETRES UNLESS OTHERWISE NOTED.

CITY OF VANCOUVER	ENGINEERING SERVICES			
	DIV./BR. TRAFFIC MANAGEMENT T.S. ELECTRICAL	JUNCTION BOXES	SCALE: NOT TO SCALE	
ELEVATIONS & COORDINATES SHOWN ON THIS PLAN ARE IN METRES BASED ON G.V.R.D. NAD83 DATUM	DATE: MAY 20, 2016 / DESIGN: DMD		DIRECTORY:	
	DWG: / CHK: DMD		DWG. NO.	V2.2
	REFS:		SHEET 1 OF 1	REVISION: 0

SINGLE-LINE DIAGRAM

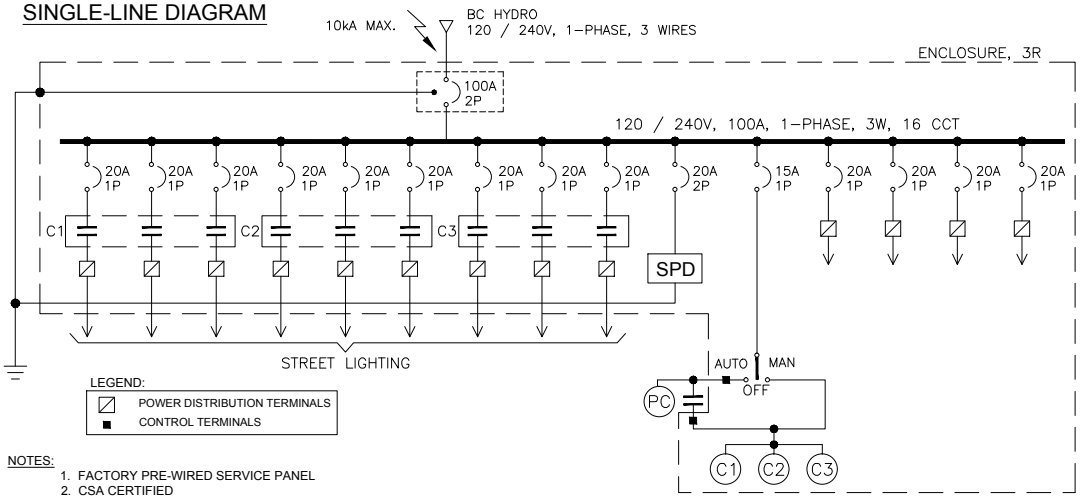

NOTES:
1. FACTORY PRE-WIRED SERVICE PANEL
2. CSA CERTIFIED

Item no	Description	Specs / Ratings	Qty.	Notes
1	Housing Dimension	32"H x 16" W x 8" D (Preferred)		
2	Faceplate	2 pc swing-type barrier/mask separating main breaker c/w wing nut screw & lamicoid		
3	Gauge	14		
4	Material	Stainless Steel		
5	Paint	Powdercoated colour (exterior only)		
6	Enclosure	Type 3R		
7	Certification	CSA Approved		
8	Door	Lockable 3 point latching system (on changeable hinges)		
9	Mounting "A"	Steel pole mount design		UNIVERSAL
10	Mounting "B"	Wood pole mount design		UNIVERSAL
11	BC Hydro Incoming Line	Underground service (steel pole)		see detail "A"
12	BC Hydro Incoming Line	Overhead service (wood pole)		see detail "B"
13	Main Breaker	100A, 2Pole Service entrance rated; no reverse feed; covered by lockable hinged door	1	
14	Circuit Breaker Panel	16 cct, 120/240V, 1phase, 3wire complete with:	1	
		a) Circuit Breaker, 15A, 1P , 10kAIC rated, Bolt-on; covered by lockable or snap-on hinged door	5	
		b) Circuit Breaker, 20A, 1P , 10kAIC rated, Bolt-on	9	
		c) Circuit Breaker, 20A, 2P , 10kAIC rated, Bolt-on	1	
15	Contactors	20A, 3P, 120V coil, lighting rated	3	
16	Surge Protective Device	120V / 240V, 3w, 1ph, UL1449 3rd Edition	1	
17	Selector Switch	Hand-Off-Auto 3-position	1	
18	Power Distribution Terminal	for wire sizes from #12 AWG - 2	13	
19	Neutral Termination Points	for wire sizes from #12 AWG - 2	15	
20	Circuit Directory Holder	approx. 12"H x 9"W x 1/2"D behind the door	1	

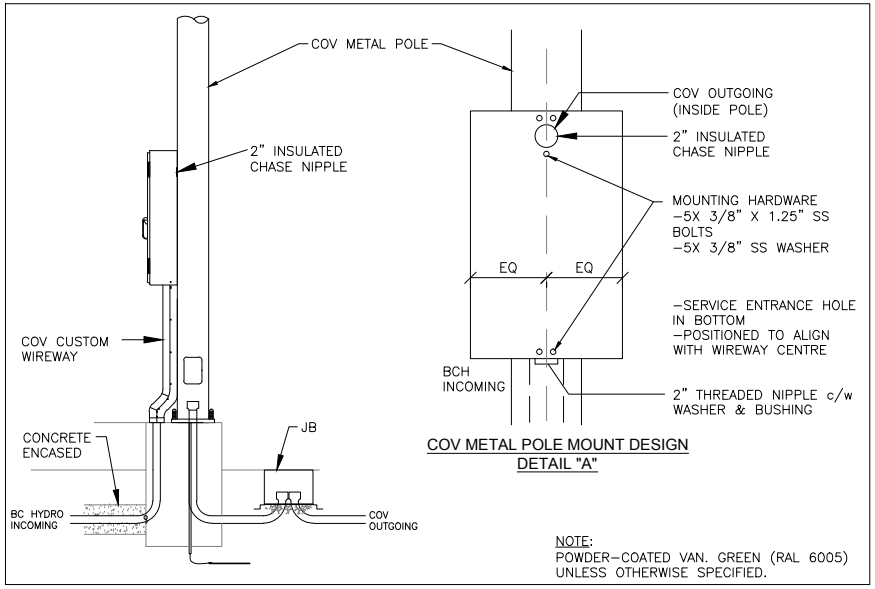

COV METAL POLE MOUNT DESIGN
DETAIL "A"

NOTE:
POWDER-COATED VAN. GREEN (RAL 6005) UNLESS OTHERWISE SPECIFIED.

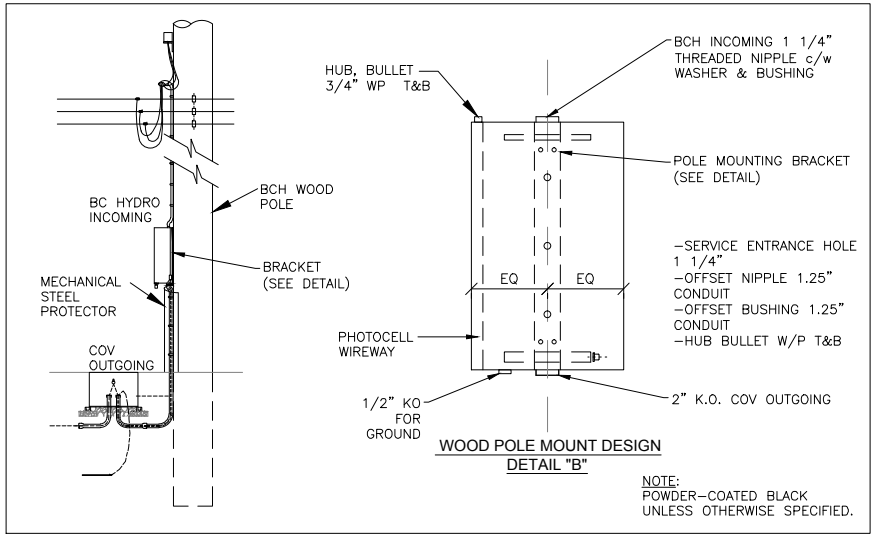

WOOD POLE MOUNT DESIGN
DETAIL "B"

NOTE:
POWDER-COATED BLACK UNLESS OTHERWISE SPECIFIED.

NOTES

1. REFER TO CONTRACT DRAWINGS, MMCD AND CITY SUPPLEMENTAL SPECIFICATIONS FOR FURTHER INFORMATION.

NO.	DATE	REVISION	BY	CHK

CITY OF VANCOUVER

ATTENTION

ELEVATIONS & COORDINATES SHOWN ON THIS PLAN ARE IN METRES BASED ON G.V.R.D. NAD83 DATUM

ENGINEERING SERVICES

DIV./BR.	TRAFFIC MANAGEMENT T.S. ELECTRICAL	POLE MOUNT SERVICE PANEL 100A, 120/240V, 1 PHASE STREET LIGHTING	SCALE: NOT TO SCALE
DATE: MAY 20, 2016	DESIGN: COV		DIRECTORY:
DWG:	CHK: DMD		DWG. NO. V3.1
REFS:			SHEET...1...OF...1... REVISION:...0....

SINGLE-LINE DIAGRAM

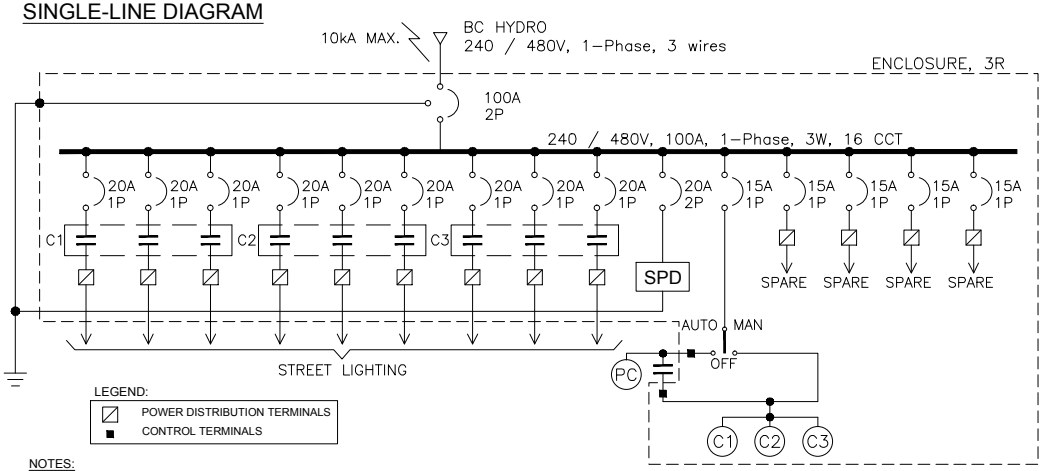

NOTES:
1. FACTORY PRE-WIRED SERVICE PANEL
2. CSA CERTIFIED

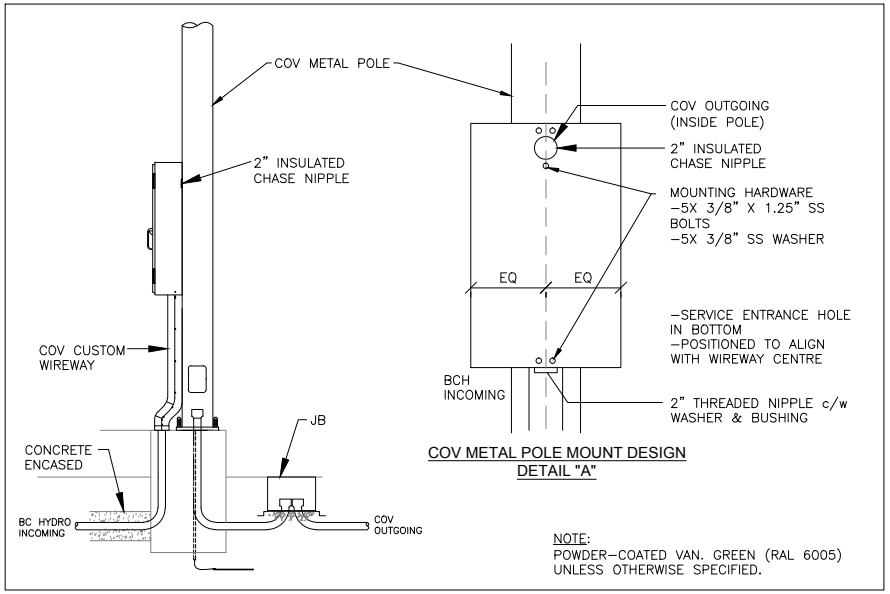

Item no	Description	Specs / Ratings	Quantity	Notes
1	Housing Dimension	36"H x 16" W x 8" D (Preferred)		
2	Faceplate	2 pc swing-type barrier/mask separating main breaker c/w wing nut screw & lamicoid		
3	Gauge	14		
4	Material	Stainless Steel		
5	Paint	Powdercoated TBD RAL colour (exterior only)		
6	Enclosure	Type 3R		
7	Certification	CSA Approved		
8	Door	Lockable 3 point latching system (on changeable hinges)		
9	Mounting "A"	Steel pole mount design		UNIVERSAL
10	Mounting "B"	Wood pole mount design		UNIVERSAL
11	BC Hydro Incoming Line	Underground service (steel pole)		see detail "A"
12	BC Hydro Incoming Line	Overhead service (wood pole)		see detail "B"
13	Main Breaker	100A, 2Pole Service entrance rated; no reverse feed	1	
14	Circuit Breaker Panel	16 cct, 240/480V, 1phase, 3wire complete with:	1	
		a) Circuit Breaker,15A, 1P , 10kAIC rated, Bolt-on	5	
		b) Circuit Breaker, 20A, 1P , 10kAIC rated, Bolt-on	9	
		c) Circuit Breaker, 20A, 2P , 10kAIC rated, Bolt-on	1	
15	Contactors	20A, 3P, 240V coil, lighting rated	3	
16	Surge Protector Device	240V / 480V, 3w, 1ph, UL1449 3rd Edition	1	
17	Selector switch,	Hand-Off-Auto 3-position	1	
18	Power Distribution Terminal	for wire sizes from #12 AWG - 2	13	
19	Neutral Termination Points	for wire sizes from #12 AWG - 2	15	
20	Circuit Directory Holder	approx. 12"H x 9"W x 1/2"D behind the door	1	

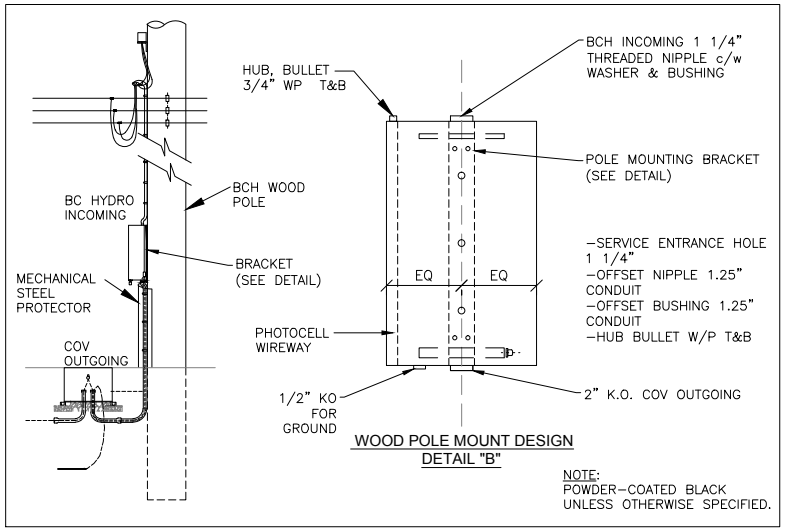

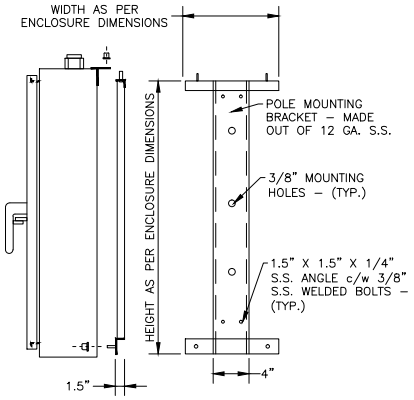

NOTES

1. REFER TO CONTRACT DRAWINGS, MMCD AND CITY SUPPLEMENTAL SPECIFICATIONS FOR FURTHER INFORMATION.

NO.	DATE	REVISION	BY	CHK

CITY OF VANCOUVER

ATTENTION

ELEVATIONS & COORDINATES SHOWN ON THIS PLAN ARE IN METRES BASED ON G.V.R.D. NAD83 DATUM

ENGINEERING SERVICES

DIV./BR.	TRAFFIC MANAGEMENT T.S. ELECTRICAL
DATE: MAY 20, 2016	DESIGN: COV
DWG:	CHK: DMD
REFS:	

POLE MOUNT SERVICE PANEL
100A, 240/480V, 1 PHASE
STREET LIGHTING

SCALE:	NOT TO SCALE
DIRECTORY:	
DWG. NO.	V3.2
SHEET...1...OF...1...	REVISION:...0....

SINGLE-LINE DIAGRAM

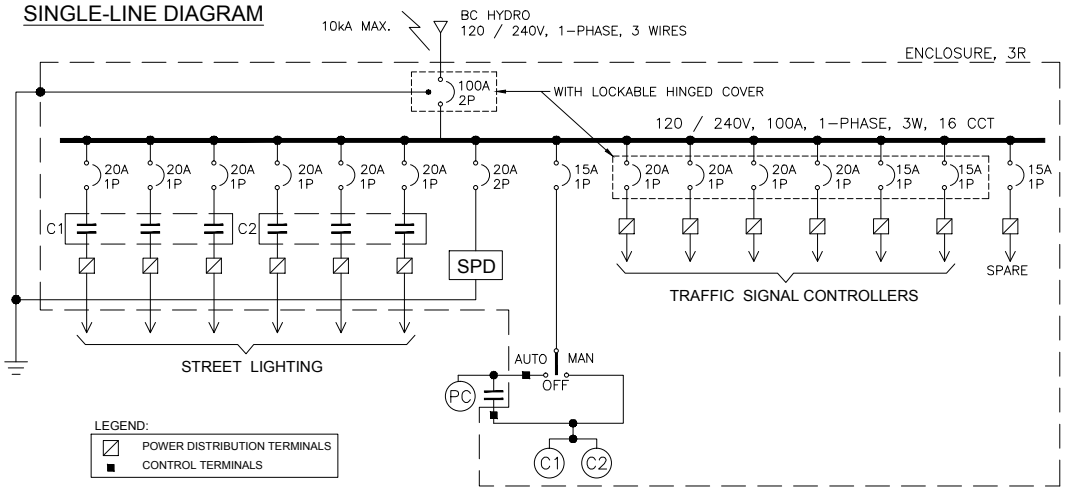

NOTES:
1. FACTORY PRE-WIRED SERVICE PANEL
2. CSA CERTIFIED

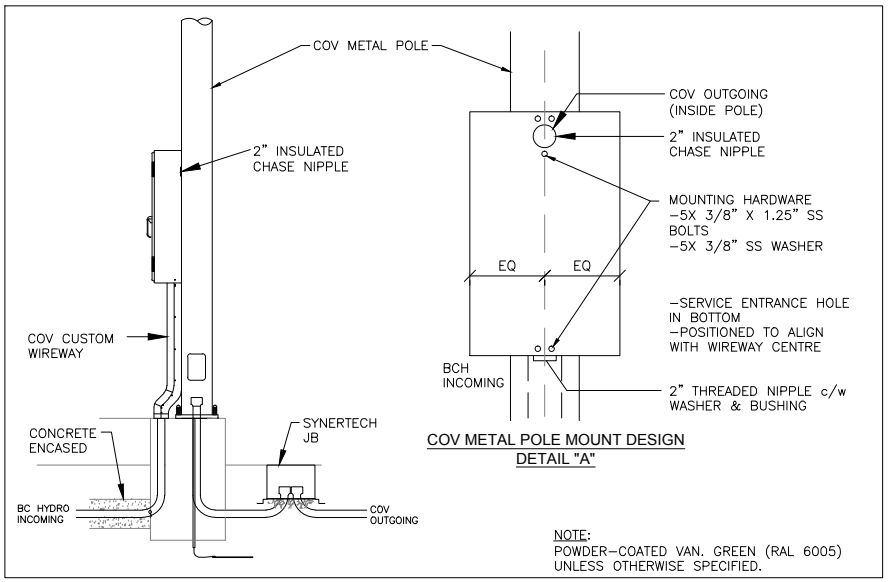

Item no	Description	Specs / Ratings	Qty.	Notes
1	Housing Dimension	32"H x 16" W x 8" D (Preferred)		
2	Faceplate	2 pc swing-type barrier/mask separating main breaker c/w wing nut screw & lamicoid		
3	Gauge	14		
4	Material	Stainless Steel		
5	Paint	Powdercoated colour (exterior only)		
6	Enclosure	Type 3R		
7	Certification	CSA Approved		
8	Door	Lockable 3 point latching system (on changeable hinges)		
9	Mounting "A"	Steel pole mount design		UNIVERSAL
10	Mounting "B"	Wood pole mount design		UNIVERSAL
11	BC Hydro Incoming Line	Underground service (steel pole)		see detail "A"
12	BC Hydro Incoming Line	Overhead service (wood pole)		see detail "B"
13	Main Breaker	100A, 2Pole Service entrance rated; no reverse feed; covered by lockable hinged door	1	
14	Circuit Breaker Panel	16 cct, 120/240V, 1phase, 3wire complete with:	1	
		a) Circuit Breaker, 15A, 1P , 10kAIC rated, Bolt-on or snap-on type; covered by lockable or snap-on hinged door	6	
		b) Circuit Breaker, 15A, 1P , 10kAIC rated, Bolt-on or snap-on type; with snap-on hinged door	2	
		c) Circuit Breaker, 20A, 1P , 10kAIC rated, Bolt-on or snap-on type	6	
		d) Circuit Breaker, 20A, 2P , 10kAIC rated, Bolt-on or snap-on type	1	
15	Contactors	20A, 3P, 120V coil, lighting rated	2	
16	Surge Protective Device	120V / 240V, 3w, 1ph, UL1449 3rd Edition	1	
17	Selector Switch	Hand-Off-Auto 3-position	1	
18	Power Distribution Terminal	for wire sizes from #12 AWG - 2	13	
19	Neutral Termination Points	for wire sizes from #12 AWG - 2	15	
20	Circuit Directory Holder	approx. 12"H x 9"W x 1/2"D behind the door	1	

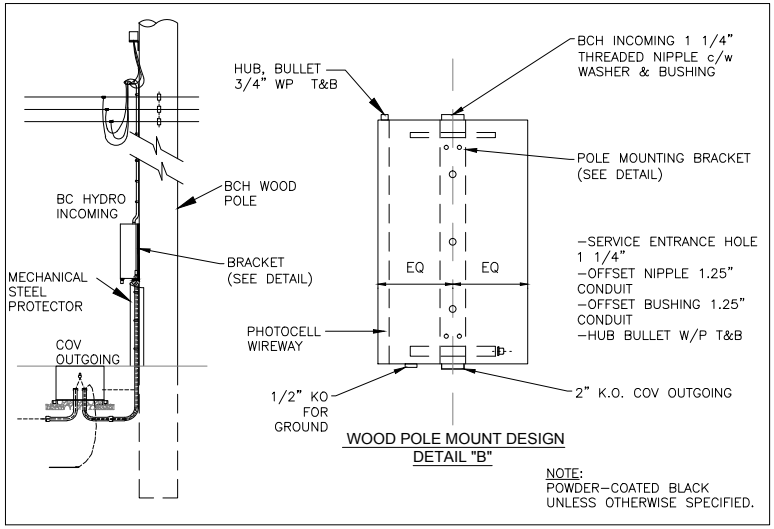

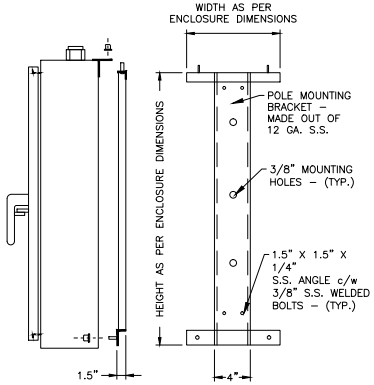

NOTES

1. REFER TO CONTRACT DRAWINGS, MMCD AND CITY SUPPLEMENTAL SPECIFICATIONS FOR FURTHER INFORMATION.

NO.	DATE	REVISION	BY	CHK

CITY OF VANCOUVER

ATTENTION

ELEVATIONS & COORDINATES SHOWN ON THIS PLAN ARE IN METRES BASED ON G.V.R.D. NAD83 DATUM

ENGINEERING SERVICES

DIV./BR.	TRAFFIC MANAGEMENT T.S. ELECTRICAL	SCALE:	NOT TO SCALE
DATE: MAY 20, 2016	DESIGN: COV	DIRECTORY:	
DWG:	CHK: DMD	DWG. NO.	V3.3
REFS:		SHEET...1...OF...1...	REVISION:...0....

POLE MOUNT SERVICE PANEL 100A, 120/240V, 1 PHASE STREET LIGHTING/TRAFFIC SIGNAL

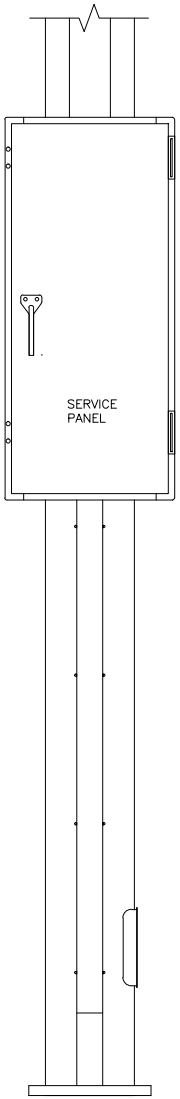

FRONT VIEW

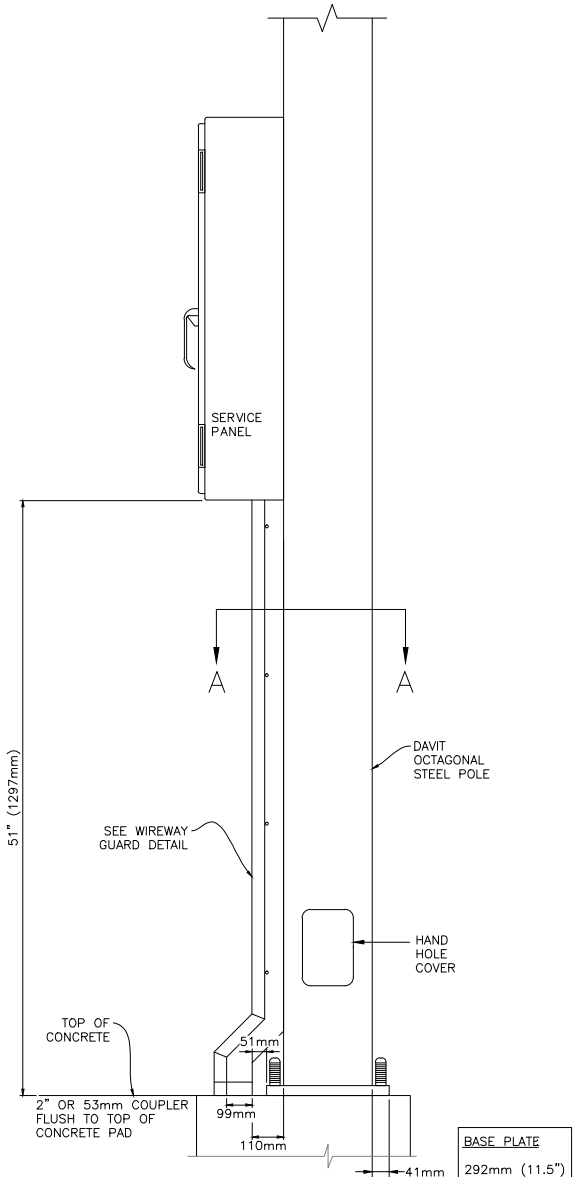

BASE PLATE
292mm (11.5")
305mm (12")

SIDE VIEW

WIREWAY GUARD
PLAN VIEW

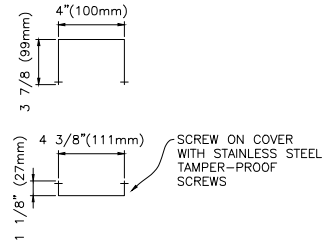

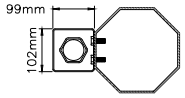

SECTION A–A

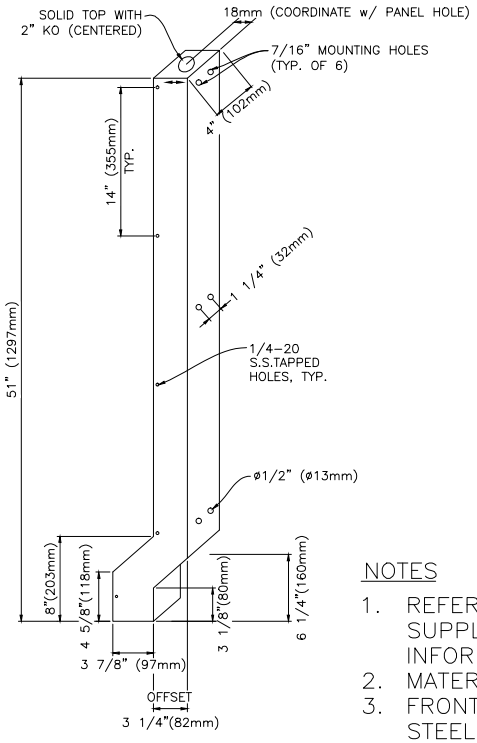

WIREWAY GUARD
DETAIL

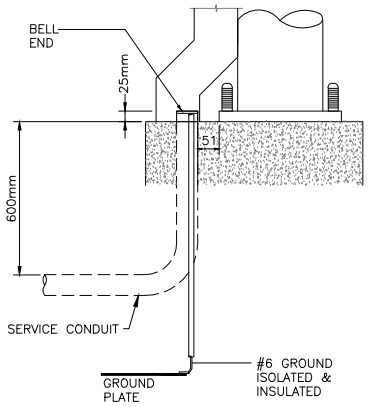

PROFILE

NOTES

1. REFER TO CONTRACT DRAWINGS, MMCD AND CITY SUPPLEMENTAL SPECIFICATIONS FOR FURTHER INFORMATION.
2. MATERIAL: 12 GA STAINLESS STEEL.
3. FRONT COVER TO BE CLOSED BY STAINLESS STEEL TAMPER PROOF SCREWS.
4. POWDER COATED COV GREEN RAL 6005 (UNLESS OTHER WISE SPECIFIED).

NO.	DATE	REVISION	BY	CHK

CITY OF VANCOUVER

ATTENTION

ELEVATIONS & COORDINATES SHOWN ON THIS PLAN ARE IN METRES BASED ON G.V.R.D. NAD83 DATUM

ENGINEERING SERVICES

DIV./BR.	TRAFFIC MANAGEMENT T.S. ELECTRICAL	POLE MOUNT SERVICE PANEL AND WIREWAY DETAIL	SCALE: NOT TO SCALE
DATE: MAY 20, 2016	DESIGN: COV		DIRECTORY:
DWG:	CHK: DMD		DWG. NO. V3.4
REFS:			SHEET 1 OF 1 / REVISION: 0

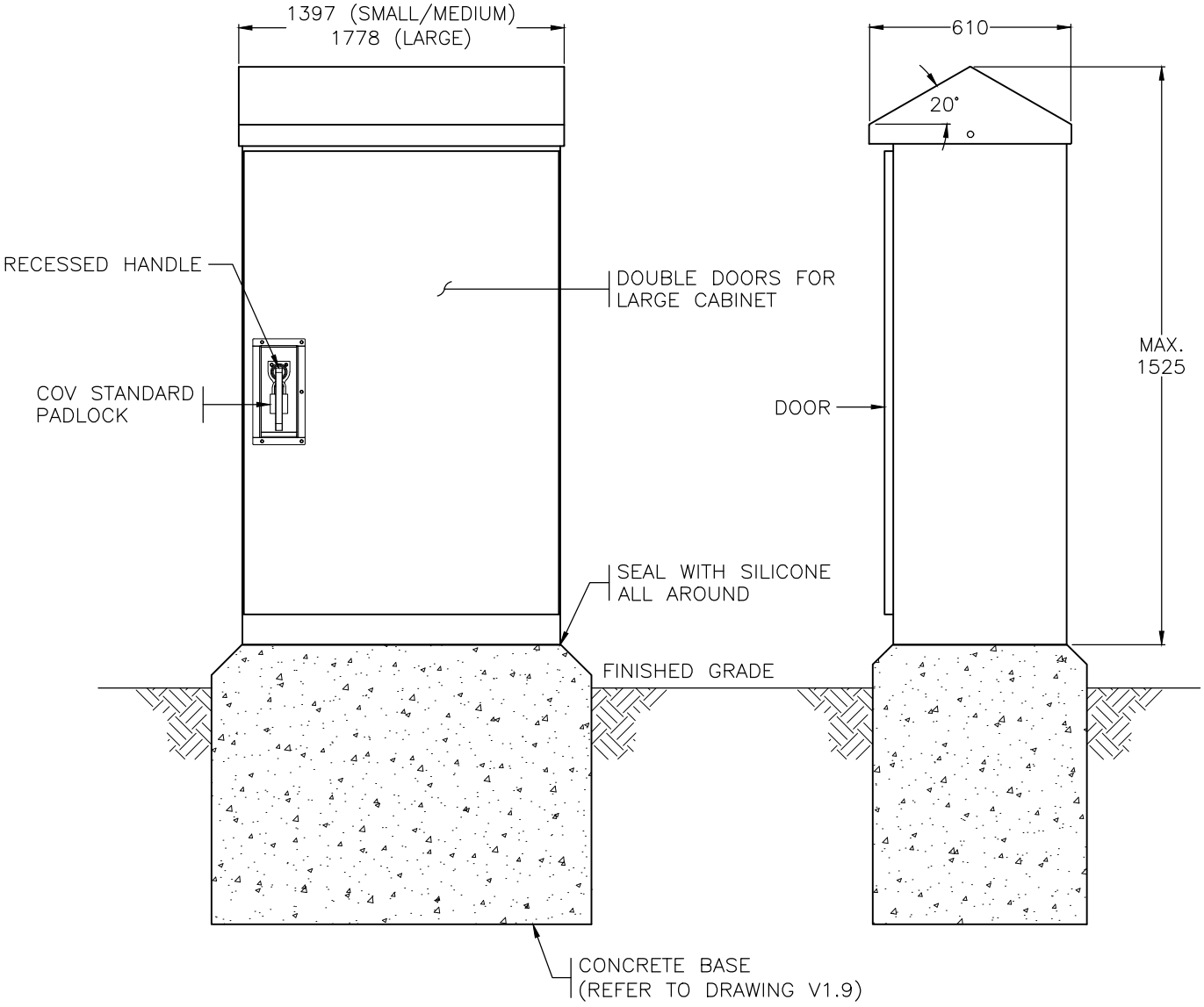

FRONT VIEW

RIGHT SIDE VIEW

NOTES

1. REFER TO CONTRACT DRAWINGS, MMCD AND CITY SUPPLEMENTAL SPECIFICATIONS FOR FURTHER INFORMATION.
2. ALL DIMENSIONS ARE IN MILLIMETRES UNLESS OTHERWISE NOTED.

CITY OF VANCOUVER	ENGINEERING SERVICES			
ELEVATIONS & COORDINATES SHOWN ON THIS PLAN ARE IN METRES BASED ON G.V.R.D. NAD83 DATUM	DIV./BR. TRAFFIC MANAGEMENT T.S. ELECTRICAL	TYPICAL SERVICE KIOSK/CABINET	SCALE: NOT TO SCALE	
	DATE: MAY 20, 2016 / DESIGN: COV		DIRECTORY:	
	DWG: / CHK: DMD		DWG. NO. V3.5	
	REFS:		SHEET 1 OF 1	REVISION: 0

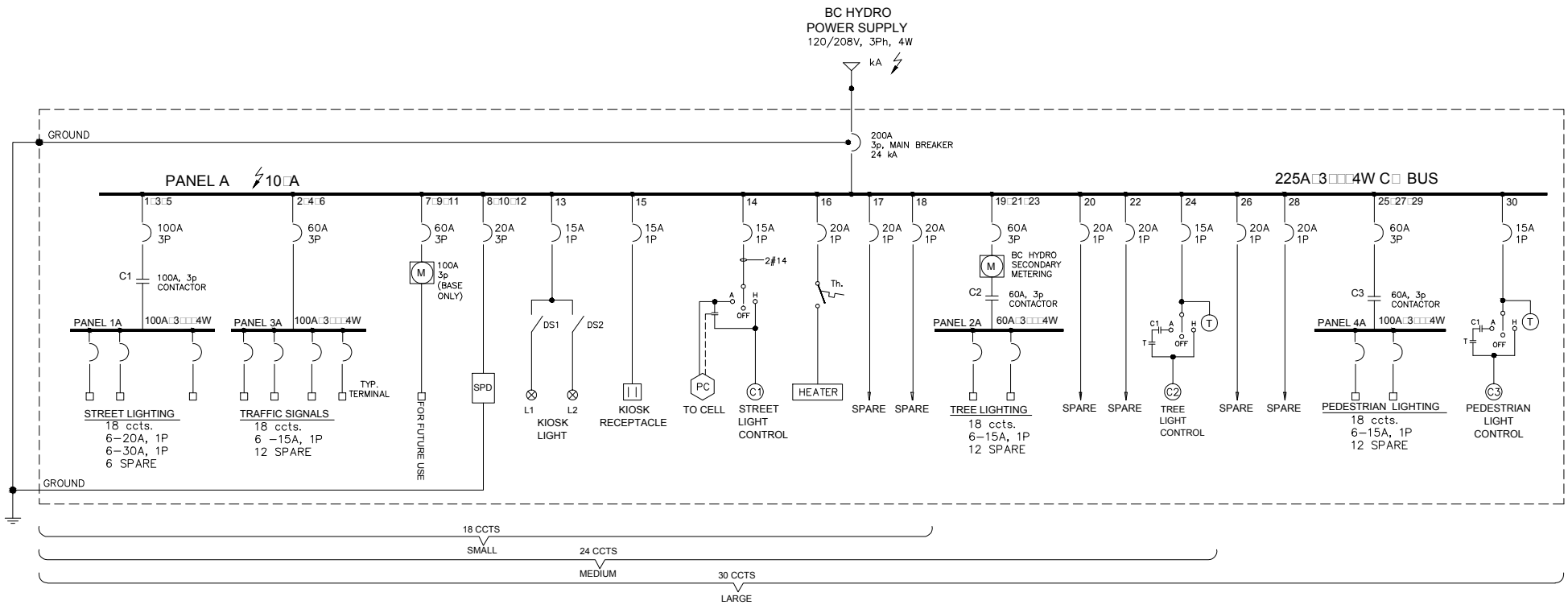

CIRCUIT DIAGRAM FOR THE TYPICAL TIE ON THREE 1□CB□ IF COMMON NEUTRAL IS USED

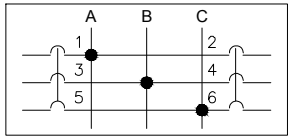

NOTES

1. REFER TO CONTRACT DRAWINGS, MMCD AND CITY SUPPLEMENTAL SPECIFICATIONS SECTION 265601A FOR FURTHER INFORMATION.
2. THREE 1P CB's TIED TOGETHER ON 1 PH CIRCUITS USING THE SAME NEUTRAL.

NO.	DATE	REVISION	BY	CHK

CITY OF VANCOUVER

ATTENTION

ELEVATIONS & COORDINATES SHOWN ON THIS PLAN ARE IN METRES BASED ON G.V.R.D. NAD83 DATUM

ENGINEERING SERVICES

DIV./BR.	TRAFFIC MANAGEMENT T.S. ELECTRICAL
DATE: MAY 20, 2016	DESIGN: COV
DWG:	CHK: DMD
REFS:	

SERVICE CABINET
STANDARD 120/208V 3ø, 4W
STREET LIGHTING/TRAFFIC SIGNAL

SCALE:	NOT TO SCALE
DIRECTORY:	
DWG. NO.	V3.6
SHEET...1...OF...1...	REVISION:...0....

ITEM NO.	QTY	PART NUMBER	DESCRIPTION	MATERIAL	UNIT WEIGHT	TOTAL WEIGHT
1	1	S15-22-AVA-A02	Bracket Arm, For Trolley Pole, City of Vancouver	See drawing S15-22-AVA-A02	5.0	5.0
2	1	R20-65-3.00-C003	Arm, 3" Sch 10 Pipe, OD=3.5", Thk=0.12"	ASTM A53 Grade B	16.0	16.0
3	1	P66-00-84X62X10	TENON PLATE, ROUND, OD=84, CO=62, THK=9.53	G40.21 300W	0.2	0.2
4	1	P65-60X230-001	TENON, HSS ROUND, OD=60, THK=3.9, L=230	ASTM A500 GR.C	1.2	1.2
5	2	H12-GS-2,020-10.00x8.86	U Bolt, Wire Dia=0.5, For Pole Size= 10.00", Thread Length = 7.000", Galvanized Steel	SAE GR.5	0.9	1.8
6	8	H40-A194-G0.500	NUT, HEAVY HEX, 1/2", GALV	ASTM A563 GRADE DH	0.0	0.0
7	8	H70-F436-G0.500	WASHER, FLAT, STRUCTURAL, 1/2", GALV	ASTM F436	0.0	0.0
8	1	H10-A325-0.500X2.00	BOLT HEX, 1/2" x 2.00", GALV	ASTM A325 TYPE1	0.1	0.1
9	2	H70-PW-D001	Rectangular Washer Plate, Length=101.6, Weight=38.1, Thk=7.9, Galv	G40.21 300W	0.2	0.4
10	1	R20-15-AVA-01	Curved Rod, Dia=1.500", Rod Dia=0.375"	G40.21 300W	0.1	0.1
					Assembly Weight (kg)=	24.8

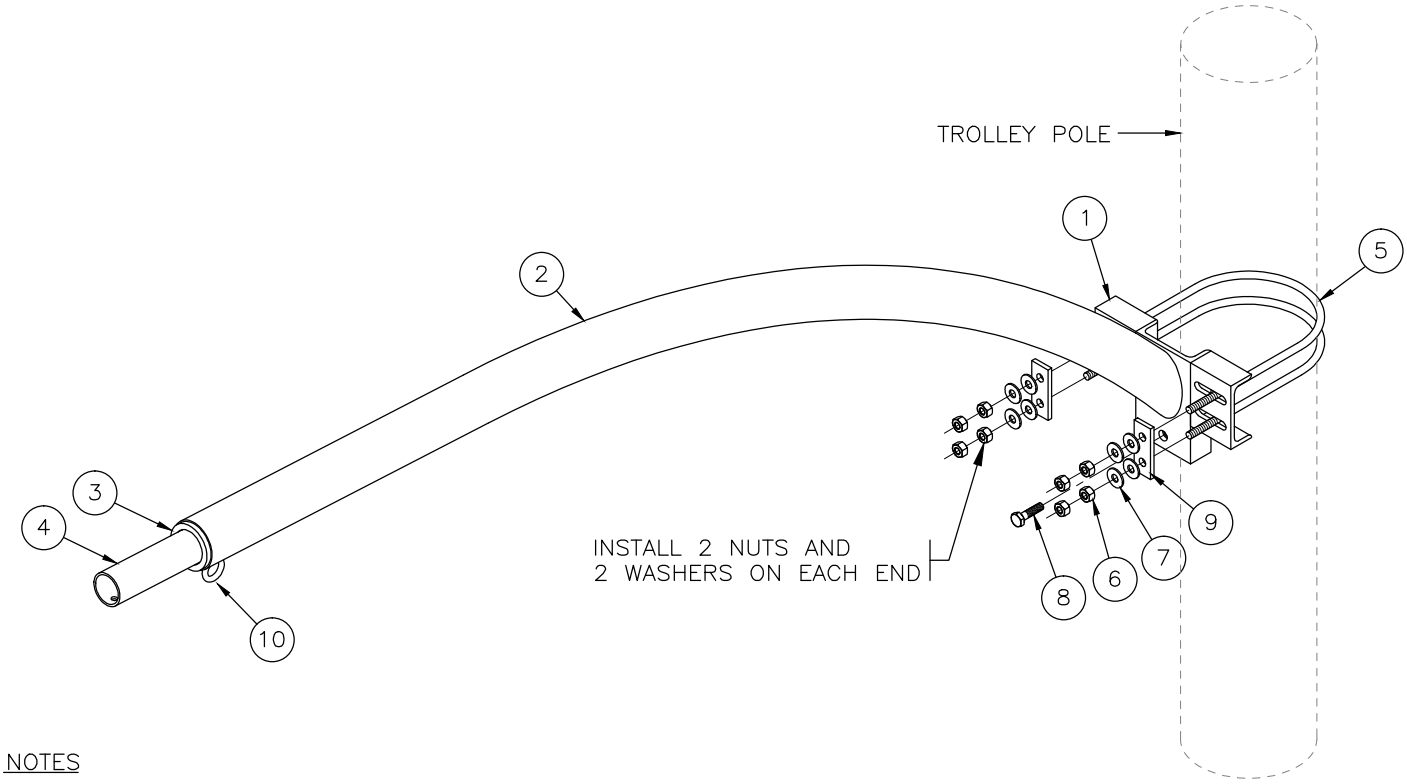

NOTES

1. REFER TO CONTRACT DRAWINGS, MMCD AND CITY SUPPLEMENTAL SPECIFICATIONS FOR FURTHER INFORMATION.
2. ALL DIMENSIONS ARE IN MILLIMETRES UNLESS OTHERWISE NOTED.

CITY OF VANCOUVER	ENGINEERING SERVICES		
ELEVATIONS & COORDINATES SHOWN ON THIS PLAN ARE IN METRES BASED ON G.V.R.D. NAD83 DATUM	DIV./BR. TRAFFIC MANAGEMENT T.S. ELECTRICAL	1.8m/2.5m TROLLEY POLE STREETLIGHT ARM	SCALE: NOT TO SCALE
	DATE: MAY 20, 2016 DESIGN: COV		DIRECTORY:
	DWG: CHK: DMD		DWG. NO. V4.1
	REFS:		SHEET 1 OF 1 REVISION: 0

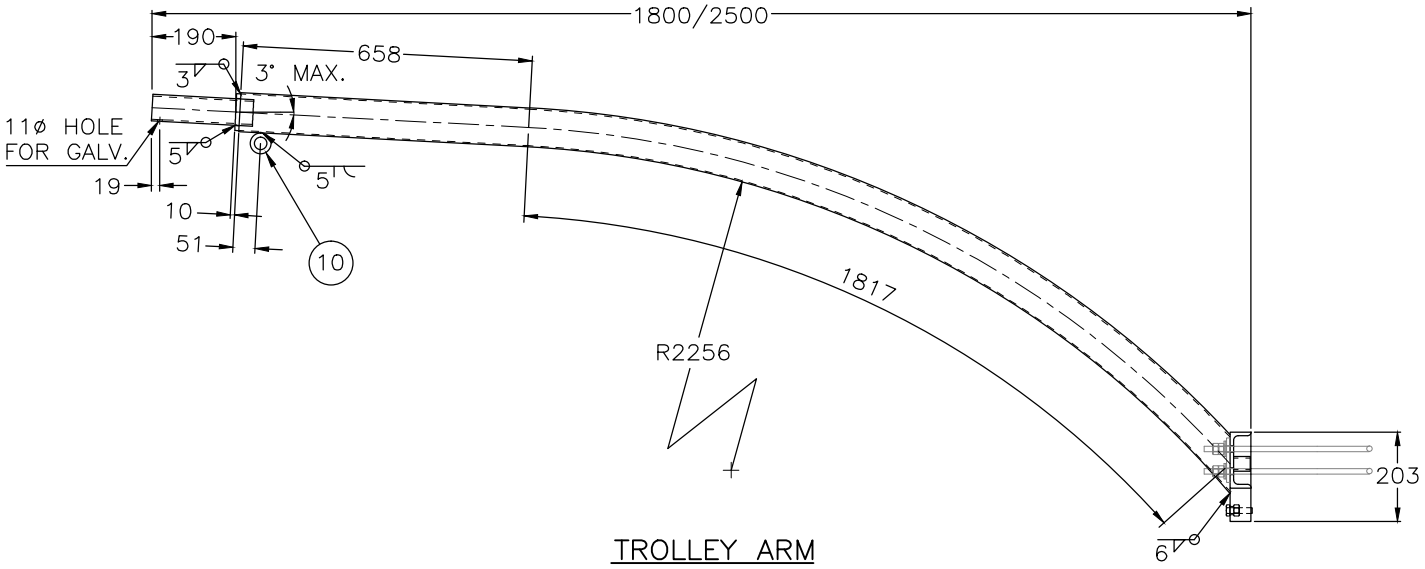

TROLLEY ARM

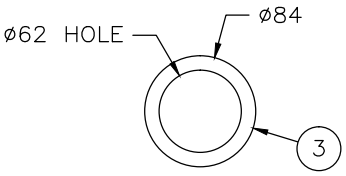

TENON PLATE

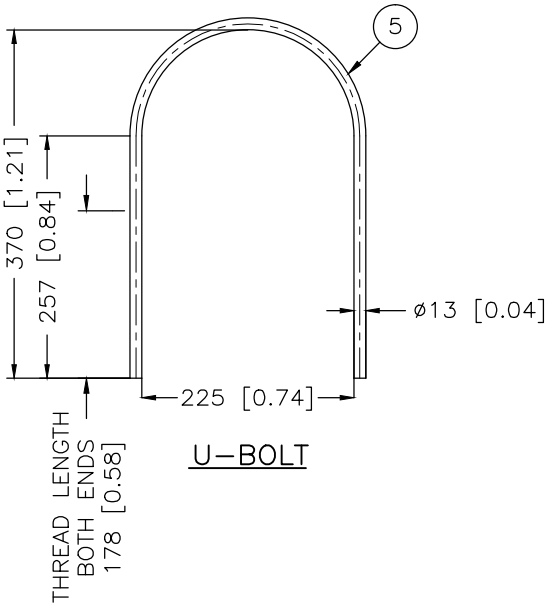

U–BOLT

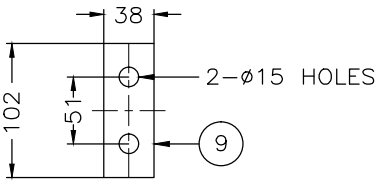

WASHER PLATE

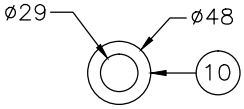

CURVED ROD

NOTES

1. REFER TO CONTRACT DRAWINGS, MMCD AND CITY SUPPLEMENTAL SPECIFICATIONS FOR FURTHER INFORMATION.
2. ALL DIMENSIONS ARE IN MILLIMETRES UNLESS OTHERWISE NOTED.

CITY OF VANCOUVER	ENGINEERING SERVICES			
ELEVATIONS & COORDINATES SHOWN ON THIS PLAN ARE IN METRES BASED ON G.V.R.D. NAD83 DATUM	DIV./BR. TRAFFIC MANAGEMENT T.S. ELECTRICAL	1.8m/2.5m TROLLEY POLE STREETLIGHT ARM	SCALE: NOT TO SCALE	
	DATE: MAY 20, 2016 / DESIGN: COV		DIRECTORY:	
	DWG: / CHK: DMD		DWG. NO. V4.2	
	REFS:		SHEET 1 OF 1	REVISION: 0

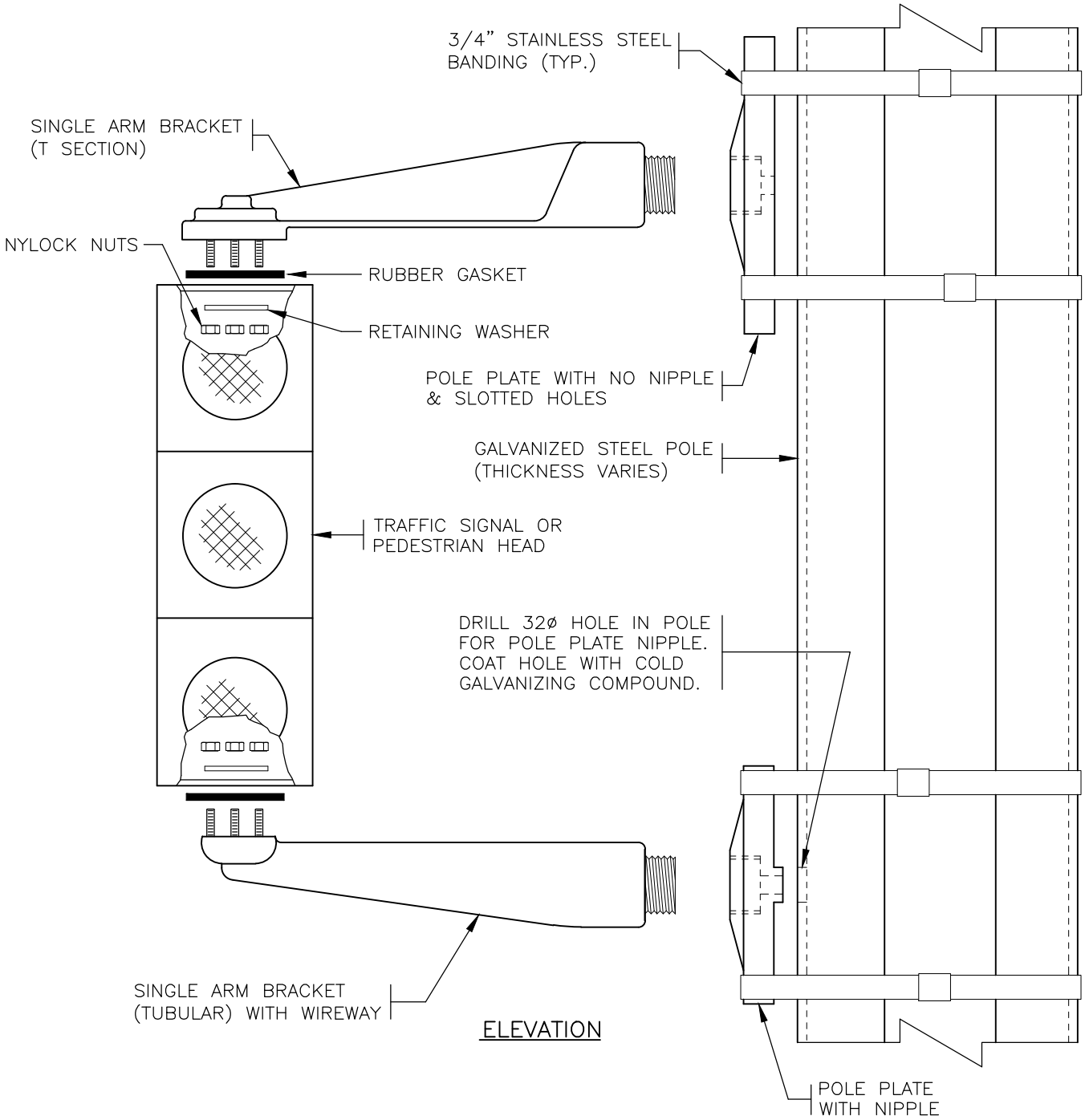

NOTES

1. REFER TO CONTRACT DRAWINGS, MMCD AND CITY SUPPLEMENTAL SPECIFICATIONS FOR FURTHER INFORMATION.
2. AIM SIGNAL HEADS AS DIRECTED BY CONTRACT ADMINISTRATOR.
3. ALL DIMENSIONS ARE IN MILLIMETRES UNLESS OTHERWISE NOTED.

CITY OF VANCOUVER	ENGINEERING SERVICES			
ELEVATIONS & COORDINATES SHOWN ON THIS PLAN ARE IN METRES BASED ON G.V.R.D. NAD83 DATUM	DIV./BR. TRAFFIC MANAGEMENT T.S. ELECTRICAL	SIDE OF POLE SIGNAL HEAD MOUNTING	SCALE: NOT TO SCALE	
	DATE: MAY 20, 2016 / DESIGN: MMCD		DIRECTORY:	
	DWG: / CHK: DMD		DWG. NO. V4.3	
	REFS:		SHEET 1 OF 1	REVISION: 0

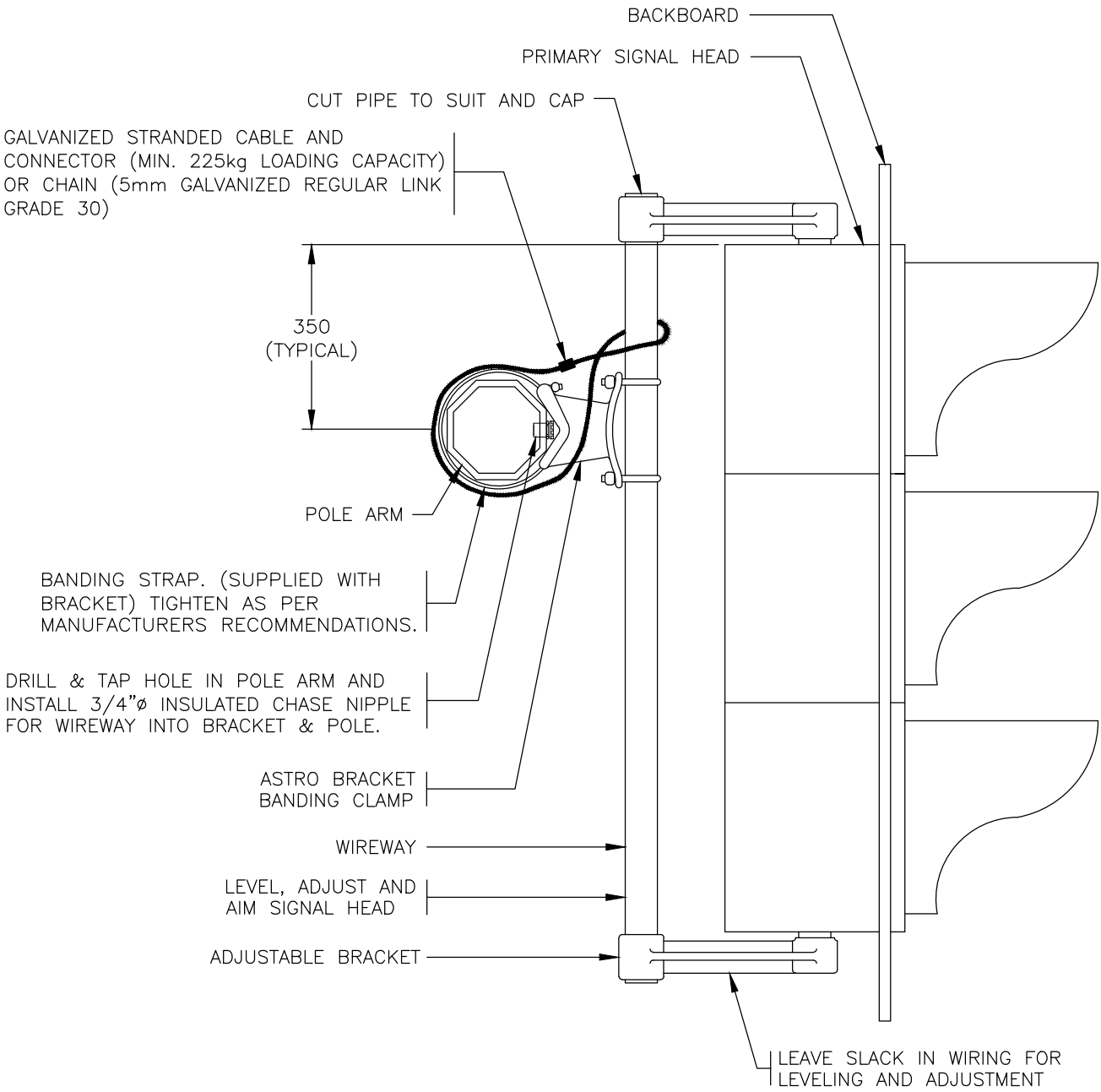

NOTES

1. REFER TO CONTRACT DRAWINGS, MMCD AND CITY SUPPLEMENTAL SPECIFICATIONS FOR FURTHER INFORMATION.
2. AIM SIGNAL HEADS AS DIRECTED BY CONTRACT ADMINISTRATOR.
3. ALL DIMENSIONS ARE IN MILLIMETRES UNLESS OTHERWISE NOTED.

CITY OF VANCOUVER	ENGINEERING SERVICES			
ELEVATIONS & COORDINATES SHOWN ON THIS PLAN ARE IN METRES BASED ON G.V.R.D. NAD83 DATUM	DIV./BR. TRAFFIC MANAGEMENT T.S. ELECTRICAL	OVERHEAD SIGNAL HEAD MOUNTING	SCALE: NOT TO SCALE	
	DATE: MAY 20, 2016 / DESIGN: MMCD		DIRECTORY:	
	DWG: / CHK: DMD		DWG. NO. V4.4	
	REFS:		SHEET 1 OF 1	REVISION: 0

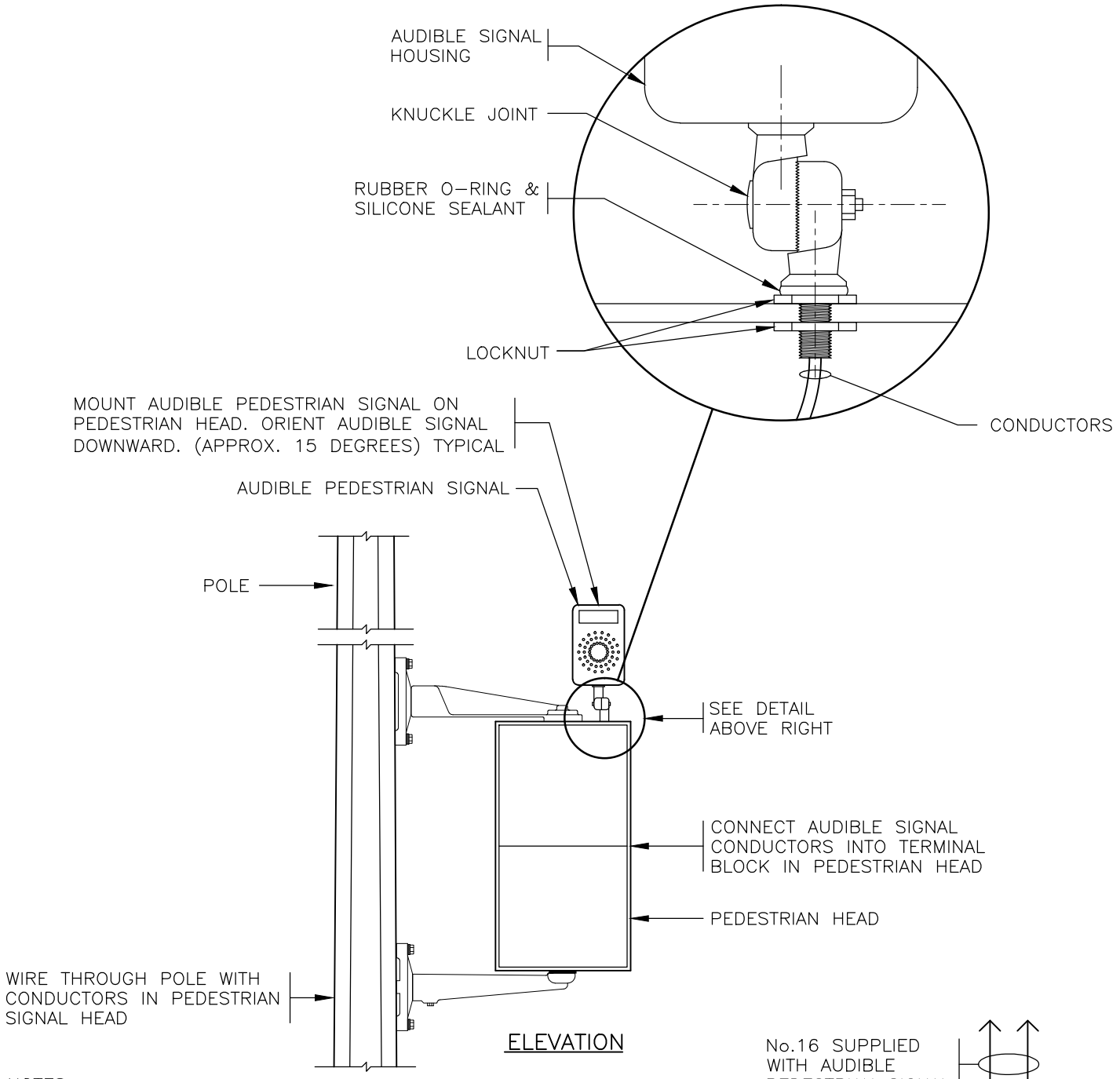

ELEVATION

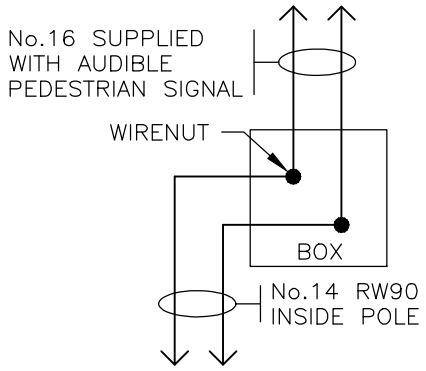

WIRING DIAGRAM

NOTES

1. REFER TO CONTRACT DRAWINGS, MMCD AND CITY SUPPLEMENTAL SPECIFICATIONS FOR FURTHER INFORMATION.
2. AIM, ADJUST AND CONNECT AUDIBLE SIGNAL AS PER MANUFACTURERS INSTRUCTIONS TO SATISFACTION OF CONTRACT ADMINISTRATOR.
3. AUDIBLE SIGNAL TO 'CHIRP' FOR EAST TO WEST CROSSINGS & 'CUCKOO' FOR NORTH TO SOUTH CROSSINGS. AT INTERSECTIONS WHERE NORTH/SOUTH AND EAST/WEST ARE NOT EASILY DEFINED CONTACT CONTRACT ADMINISTRATOR FOR DIRECTION.
4. ALL DIMENSIONS ARE IN MILLIMETRES UNLESS OTHERWISE NOTED.

CITY OF VANCOUVER	ENGINEERING SERVICES			
ELEVATIONS & COORDINATES SHOWN ON THIS PLAN ARE IN METRES BASED ON G.V.R.D. NAD83 DATUM	DIV./BR. TRAFFIC MANAGEMENT T.S. ELECTRICAL	AUDIBLE SIGNALS	SCALE: NOT TO SCALE	
	DATE: MAY 20, 2016 / DESIGN: MMCD		DIRECTORY:	
	DWG: / CHK: DMD		DWG. NO. V4.5	
	REFS:		SHEET 1 OF 1	REVISION: 0

COLOUR CODING (25 CONDUCTOR SIGNAL CABLE)

DIRECTION	SIGNAL HEAD	FIELD WIRES	CABLE		CABLE 25C
		1C - □14 RWU90	7C WITHOUT ARROW	7C WITH ARROW	
NORTH □ SOUTH	RED	RED	RED	RED	RED
	AMBER	YELLOW	ORANGE	ORANGE	ORANGE
	GREEN	GREEN	BLUE	BLUE	GREEN
EAST □ WEST□ CROSSWALKS	WALK	ORANGE	GREEN		WHITE/BLACK
	DON□T WALK	BROWN	BLACK		GREEN/BLACK
NORTH □ SOUTH□ LEFT/RIGHT TURN	RED	RED			RED/WHITE
	AMBER	ORANGE		BLACK	WHITE/RED
	GREEN	BLUE		GREEN	BLUE/BLACK
EAST □ WEST	RED	RED	RED	RED	BLACK/RED
	AMBER	ORANGE	ORANGE	ORANGE	ORANGE/RED
	GREEN	BLUE	BLUE	BLUE	BLUE
NORTH □ SOUTH□ CROSSWALKS	WALK	YELLOW	GREEN		BLUE/WHITE
	DON□T WALK	BLUE	BLACK		RED/BLACK
EAST □ WEST□ LEFT/RIGHT TURN	RED	RED			BLUE/RED
	AMBER	YELLOW		BLACK	ORANGE/BLACK
	GREEN	GREEN		GREEN	GREEN/WHITE
PED PUSHBUTTON	DC HOT	BLACK			BLACK
CYCLIST PUSHBUTTON	DC HOT	YELLOW			RED/GREEN
	DC NEUTRAL	WHITE			BLACK/WHITE
WALK INHIBITOR		BLACK	WHITE/BLACK		BLACK/GREEN
SPARE					ORANGE/GREEN
AC COMMON	NEUTRAL	WHITE	WHITE	WHITE	WHITE

T.S.M.S. TIGER TAILS	
NORTH	BLUE
SOUTH	ORANGE
EAST	BROWN
WEST	GREEN
CONTROL	GREY

NOTES

1. REFER TO CONTRACT DRAWINGS, MMCD AND CITY SUPPLEMENTAL SPECIFICATIONS FOR FURTHER INFORMATION.
2. CABLE TO BE POLYETHYLENE INSULATED POLYVINYL CHLORIDE JACKETED, BLACK, RATED AT 600 VOLTS.
3. CONDUCTORS TO BE No.14 AWG STRANDED.
4. REFERENCE TO CSA 22.2 – No. 239–97, IMSA SPEC. 19–1.

CITY OF VANCOUVER

ELEVATIONS & COORDINATES SHOWN ON THIS PLAN ARE IN METRES BASED ON G.V.R.D. NAD83 DATUM

ENGINEERING SERVICES

DIV./BR. TRAFFIC MANAGEMENT T.S. ELECTRICAL

DATE: MAY 20, 2016 DESIGN: COV

DWG: CHK: DMD

REFS:

25 CONDUCTOR SIGNAL CABLE COLOUR CODING

SCALE: NOT TO SCALE

DIRECTORY:

DWG. NO. V4.6

SHEET 1 OF 1 REVISION: 0

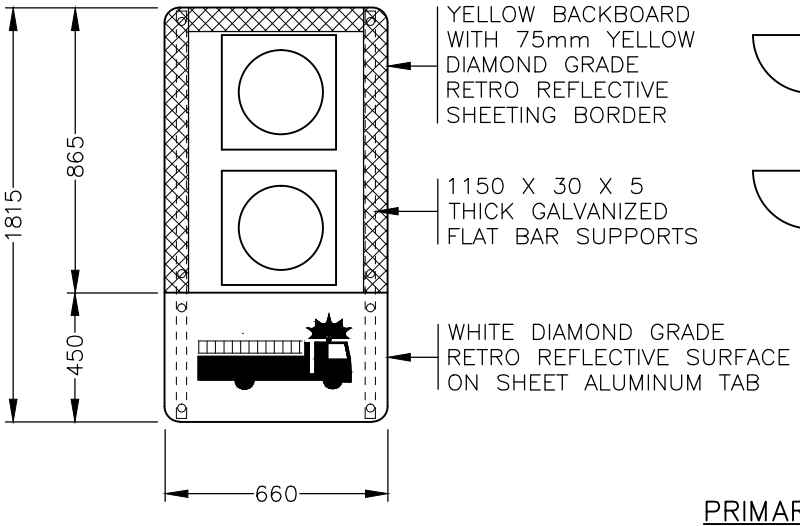

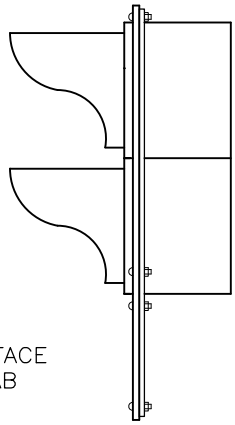

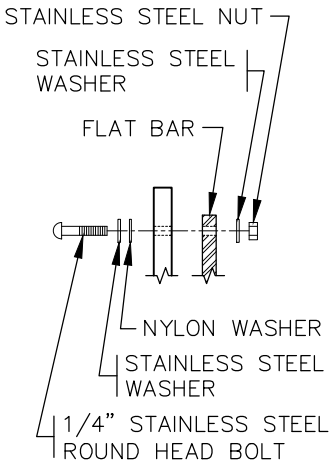

BOLT CONNECTION DETAIL

PRIMARY FIRE SIGNAL HEAD

SUPPLEMENTARY TAB SIGN
(ID–22SR OR ID–22SL) AS PER MUTCD

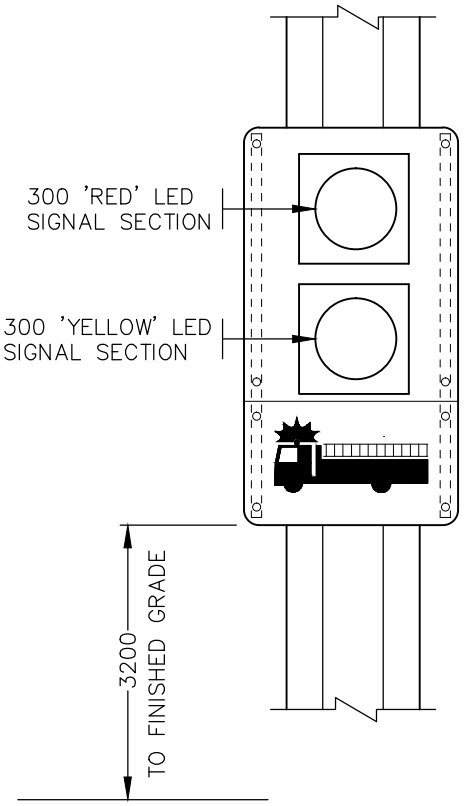

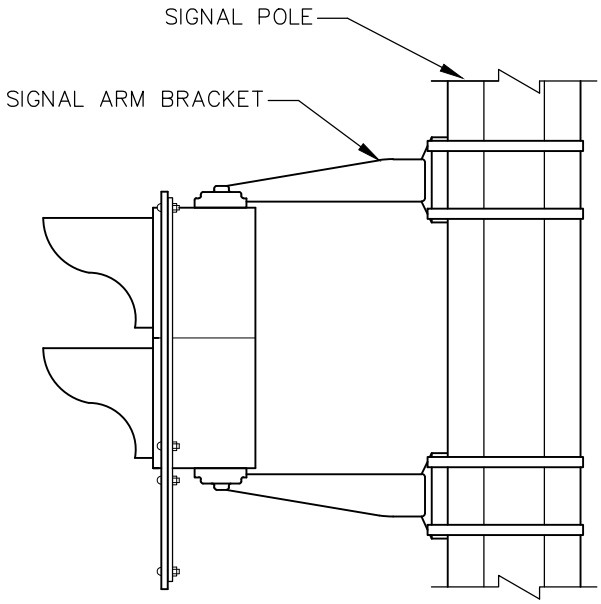

SECONDARY FIRE SIGNAL HEAD MOUNTING

NOTES

1. REFER TO CONTRACT DRAWINGS, MMCD AND CITY SUPPLEMENTAL SPECIFICATIONS FOR FURTHER INFORMATION.
2. ALL DIMENSIONS ARE IN MILLIMETRES UNLESS OTHERWISE NOTED.

CITY OF VANCOUVER	ENGINEERING SERVICES			
ELEVATIONS & COORDINATES SHOWN ON THIS PLAN ARE IN METRES BASED ON G.V.R.D. NAD83 DATUM	DIV./BR. TRAFFIC MANAGEMENT T.S. ELECTRICAL	FIRE SIGNAL SIGNS	SCALE: NOT TO SCALE	
	DATE: MAY 20, 2016 / DESIGN: DMD		DIRECTORY:	
	DWG: / CHK: DMD		DWG. NO. V4.7	
	REFS:		SHEET 1 OF 1	REVISION: 0

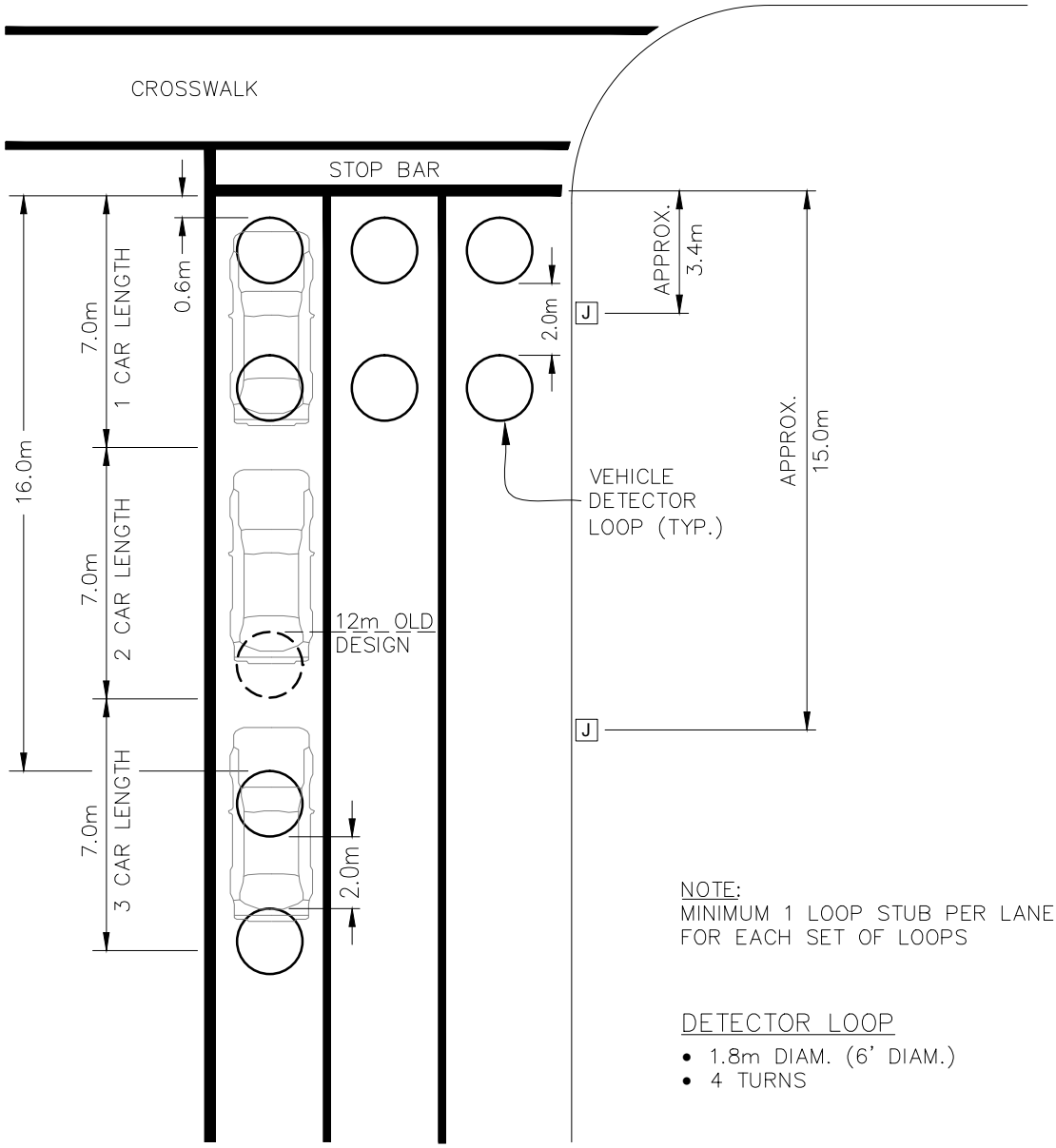

NOTE:
MINIMUM 1 LOOP STUB PER LANE
FOR EACH SET OF LOOPS

DETECTOR LOOP

- 1.8m DIAM. (6' DIAM.)
- 4 TURNS

LOOP SET	LANE 1	LANE 2	LANE 3	LANE 4	LANE 5
STOP	BLUE	YELLOW	RED	BROWN	ORANGE
QUEUE	YELLOW	RED	BROWN	ORANGE	BLUE

NOTES

1. REFER TO CONTRACT DRAWINGS, MMCD AND CITY SUPPLEMENTAL SPECIFICATIONS FOR FURTHER INFORMATION.
2. WHITE TAPE INDICATES THE BACK LOOP OF THE SET.
3. LANE 1 IS THE CURB (SLOW) LANE INCLUDING WHEN TAILS ARE FROM THE MEDIAN.
4. ALL DIMENSIONS ARE IN MILLIMETRES UNLESS OTHERWISE NOTED.

CITY OF VANCOUVER	ENGINEERING SERVICES			
ELEVATIONS & COORDINATES SHOWN ON THIS PLAN ARE IN METRES BASED ON G.V.R.D. NAD83 DATUM	DIV./BR. TRAFFIC MANAGEMENT T.S. ELECTRICAL	VEHICLE DETECTOR LOOP SIZE AND LOCATION (TYP.)	SCALE: NOT TO SCALE	
	DATE: MAY 20, 2016 / DESIGN: COV		DIRECTORY:	
	DWG: / CHK: DMD		DWG. NO. V4.8	
	REFS:		SHEET 1 OF 1	REVISION: 0

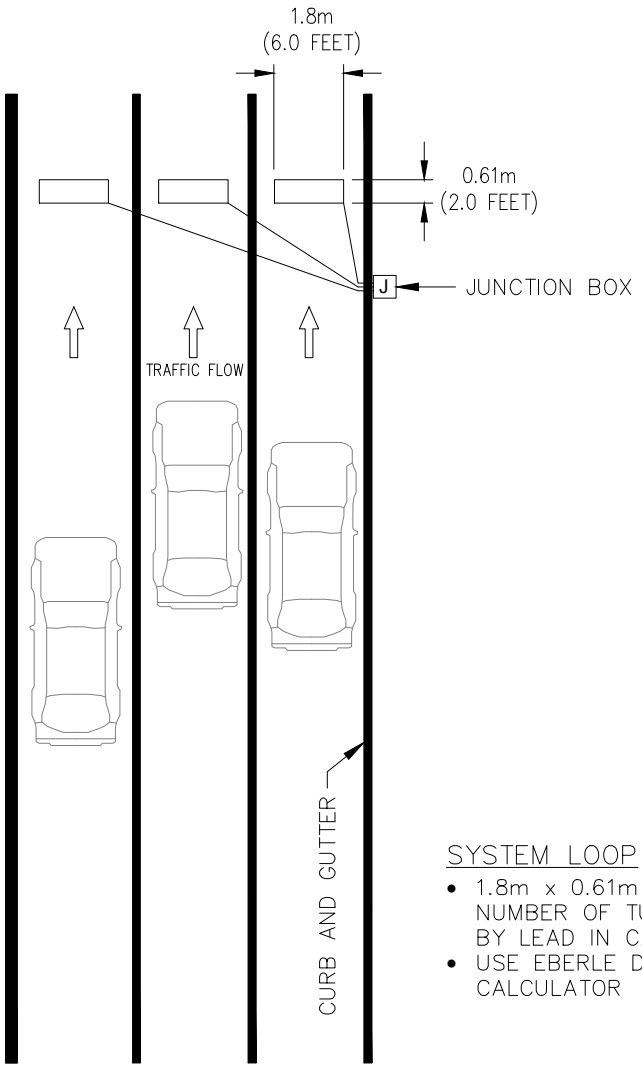

SYSTEM LOOP

- 1.8m x 0.61m
  NUMBER OF TURNS DETERMINED BY LEAD IN CABLE LENGTH
- USE EBERLE DESIGN LOOP CALCULATOR

NOTES

1. REFER TO CONTRACT DRAWINGS, MMCD AND CITY SUPPLEMENTAL SPECIFICATIONS FOR FURTHER INFORMATION.
2. ALL DIMENSIONS ARE IN MILLIMETRES UNLESS OTHERWISE NOTED.

CITY OF VANCOUVER	ENGINEERING SERVICES			
ELEVATIONS & COORDINATES SHOWN ON THIS PLAN ARE IN METRES BASED ON G.V.R.D. NAD83 DATUM	DIV./BR. TRAFFIC MANAGEMENT T.S. ELECTRICAL	SYSTEM LOOP (TYP.)	SCALE: NOT TO SCALE	
	DATE: MAY 20, 2016 / DESIGN: COV		DIRECTORY:	
	DWG: / CHK: DMD		DWG. NO. V4.9	
	REFS:		SHEET 1 OF 1	REVISION: 0

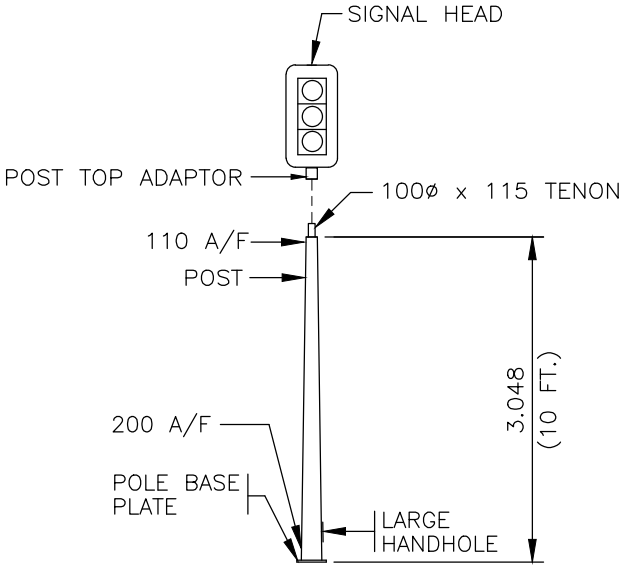

TRAFFIC SIGNAL POST

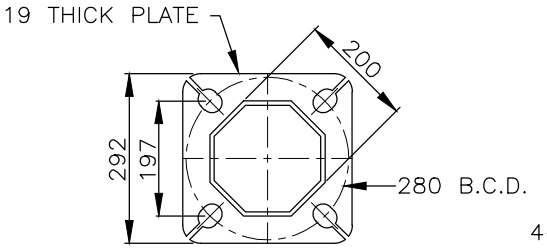

POLE BASE PLATE

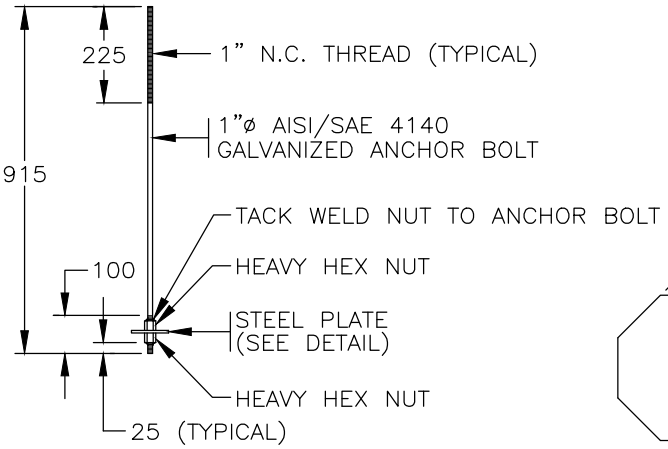

ANCHOR BOLT

4 PER SET

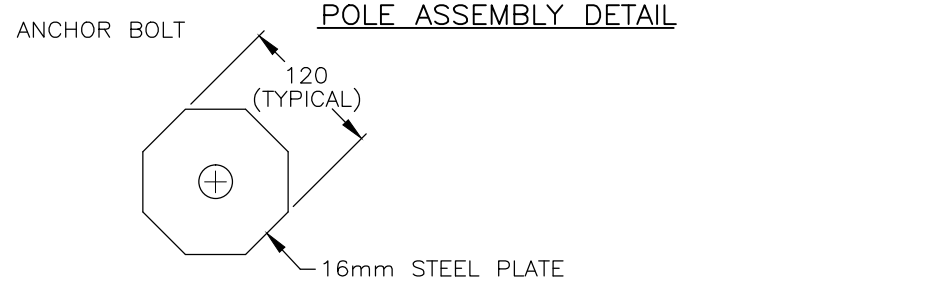

POLE ASSEMBLY DETAIL

STEEL PLATE

NOTES

1. REFER TO CONTRACT DRAWINGS, MMCD AND CITY SUPPLEMENTAL SPECIFICATIONS FOR FURTHER INFORMATION.
2. SHAFTS TO BE INSTALLED PLUMB.
3. ALL SHAFTS, ARMS AND EXTENSIONS TO BE SUPPLIED WITH A GALVANIZED FINISH, UNLESS OTHERWISE NOTED.
4. APPLY GREASE TO ANCHOR BOLT THREADS.
5. TOUCH UP ANY SCRATCHES IN GALVANIZED SURFACES WITH COLD GALVANIZING COMPOUND.
6. ALL DIMENSIONS ARE IN MILLIMETRES UNLESS OTHERWISE NOTED.

CITY OF VANCOUVER	ENGINEERING SERVICES			
	DIV./BR. TRAFFIC MANAGEMENT T.S. ELECTRICAL	TRAFFIC SIGNAL POST	SCALE: NOT TO SCALE	
ELEVATIONS & COORDINATES SHOWN ON THIS PLAN ARE IN METRES BASED ON G.V.R.D. NAD83 DATUM	DATE: MAY 20, 2016 / DESIGN: MMCD		DIRECTORY:	
	DWG: / CHK: DMD		DWG. NO. V4.10	
	REFS:		SHEET 1 OF 1	REVISION: 0

Attachment 5 – CMBC Standard Pole Base Drawings

A7E FOUNDATION

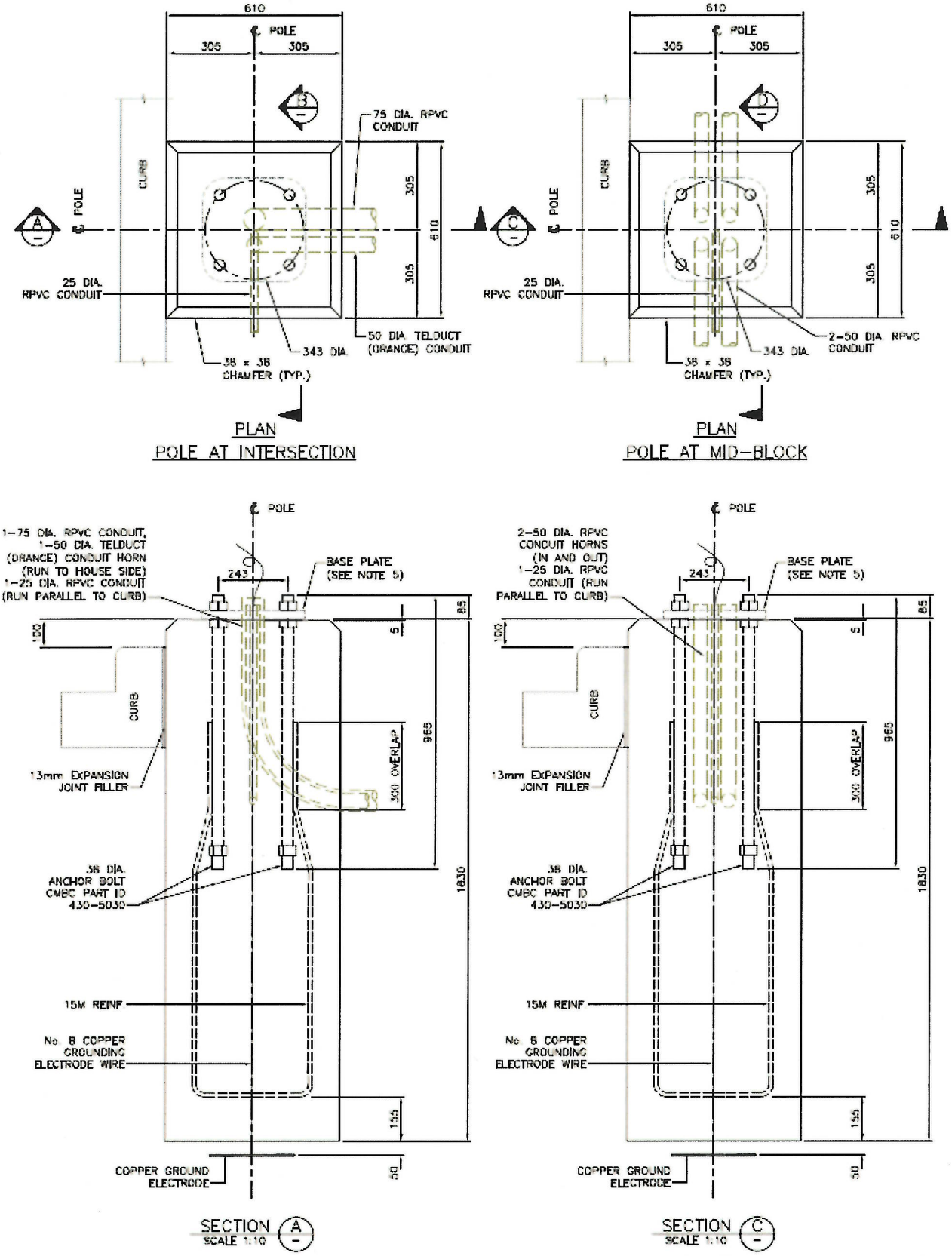

A7E FOUNDATION DETAILS & NOTES

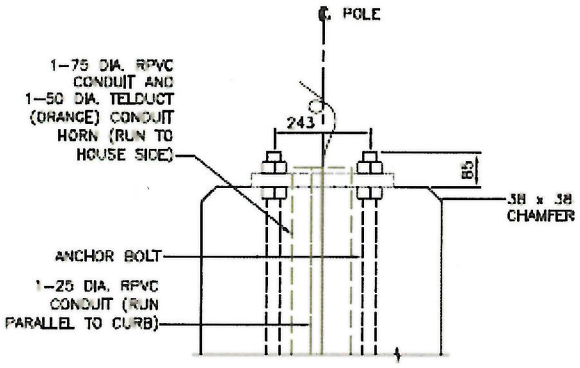

SECTION B
SCALE 1:10

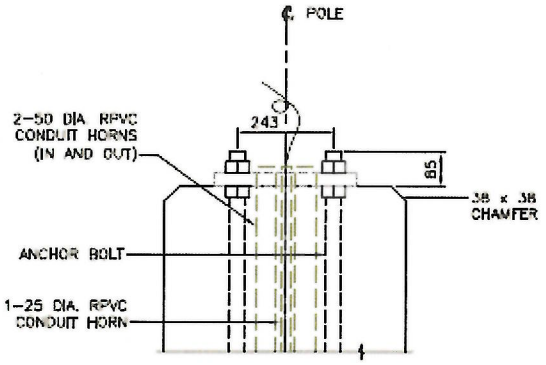

SECTION D
SCALE 1:10

NOTES

1. ALL DIMENSIONS ARE IN MILLIMETRES.
2. DESIGN HAS BEEN CHECKED FOR STRUCTURAL ADEQUACY. FOR EVERY APPLICATION, CMBC OR THEIR REPRESENTATIVE SHALL DETERMINE WHETHER THE SITE CONDITIONS ARE SUFFICIENT TO WARRANT THE USE OF THE FOUNDATION DETAIL.
3. CMBC OR THEIR REPRESENTATIVE SHALL INSPECT AND APPROVE THE INSTALLATION BEFORE CONCRETE IS POURED.
4. LOADING USED IN THE DESIGN IS AS PER CMBC LOADING, SHOWN IN TABLE BELOW:

CMBC POLE TYPE	MAXIMUM UNFACTORED LOAD (kN) *	MAXIMUM FACTORED LOAD (UNFACTORED x 1.65) kN *
A7E	6.672	11.009
A3E	13.345	22.019
A23E	26.690	44.039
A20E	35.585	58.715

*LOAD APPLIED AT 7.0m ABOVE POLE BASE. LOADS AND FACTOR PROVIDED BY CMBC.

5. CMBC BASE PLATE NOT INCLUDED IN FOUNDATION DESIGN AND WILL BE INSTALLED BY CMBC AFTER FOUNDATION CONSTRUCTION.
6. ALL MATERIALS TO BE SUPPLIED BY THE CONTRACTOR EXCEPT ANCHOR BOLTS, WHICH ARE PROVIDED BY CMBC.

EXCAVATION:

7. EXCAVATION TO BE HAND–DUG ONLY.
8. BACKFILL TO BE COMPACTED TO 95% MODIFIED PROCTOR DENSITY (ASTM SPECIFICATION D1557) OR BETTER.

CONCRETE:

9. CONCRETE SHALL HAVE A MINIMUM COMPRESSIVE STRENGTH OF 30MPa AT 28 DAYS.
10. ALL EXPOSED EDGES OF CONCRETE SHALL BE CHAMFERED 38mm UNLESS NOTED OTHERWISE.
11. TOP SURFACE OF FOUNDATION SHALL BE SLOPED AWAY FROM ROAD : CMBC STANDARD 152mm RAKE IS PROVIDED BY 5mm SLOPE AS SHOWN. REFER TO CMBC FOUNDATION RAKE TABLE FOR NON–STANDARD RAKES.

REINFORCING STEEL:

12. REINFORCING STEEL SHALL CONFORM TO CAN/CSA–G30.18–09 GRADE 400R.
13. REINFORCING BARS TO BE SHAPED AS SHOWN AND TIED TO ANCHOR BOLTS WITH A MINIMUM 300mm OVERLAPPING AS SHOWN.
14. MINIMUM COVER TO REINFORCEMENT SHALL BE 70mm UNLESS NOTED OTHERWISE.

ANCHOR BOLTS:

15. ANCHOR BOLTS SHALL CONFORM TO CURRENT CMBC DRAWINGS SD–0053 AND SD–0054, AND SHALL HAVE A MINIMUM YIELD STRENGTH OF 400MPa.
16. ANCHOR BOLTS SHALL BE HOT–DIP GALVANIZED IN ACCORDANCE WITH CSA STANDARD CAN/CSA–G164–M92. NUTS SHALL BE ZINC–PLATED IN ACCORDANCE WITH ASTM STANDARD B633.
17. TWO NUTS SHALL BE EMPLOYED ON EACH BOLT. THE BOTTOM NUT SHALL PROTRUDE 3mm ABOVE THE SURFACE OF THE CONCRETE. THE TOP NUT SHALL BE THREADED COMPLETELY ON AND SECURED 1/4 TURN BEYOND HAND TIGHTENING.
18. ANCHOR BOLTS SHALL BE LOCATED WITH A TEMPLATE TO MAINTAIN CORRECT SPACING.

GROUNDING ELECTRODE:

19. GROUNDING ELECTRODE WIRE TO EXTEND A MINIMUM OF 500mm ABOVE TOP OF FOUNDATION.
20. CONNECT GROUNDING ELECTRODE WIRE TO COPPER GROUND ELECTRODE BY BRASS BRAZING.
21. SECONDARY GROUNDING ELECTRODE TO BE ADDED AS REQUIRED BY THE CITY OF VANCOUVER, AND SHALL BE LOCATED ADJACENT TO THE FOUNDATION.

EMBEDDED CONDUIT:

22. ALL INTERSECTION POLES TO HAVE 1–75mm RPVC AND 1–50mm TELDUCT (ORANGE) CONDUIT HORNS EMBEDDED, RUNNING TO HOUSE SIDE AND 1–25mm RPVC CONDUIT HORN RUNNING PARALLEL TO THE CURB. ALL MID–BLOCK POLE TO HAVE 2–50mm

DRAWING NO.	DESCRIPTION
FND100C	FOUNDATION DETAILS FOR A7E STEEL POLE

A3E FOUNDATION

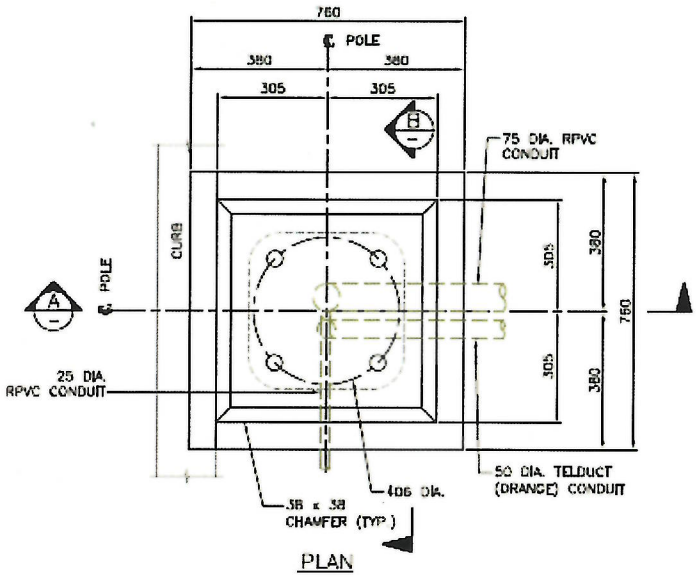

PLAN
POLE AT INTERSECTION

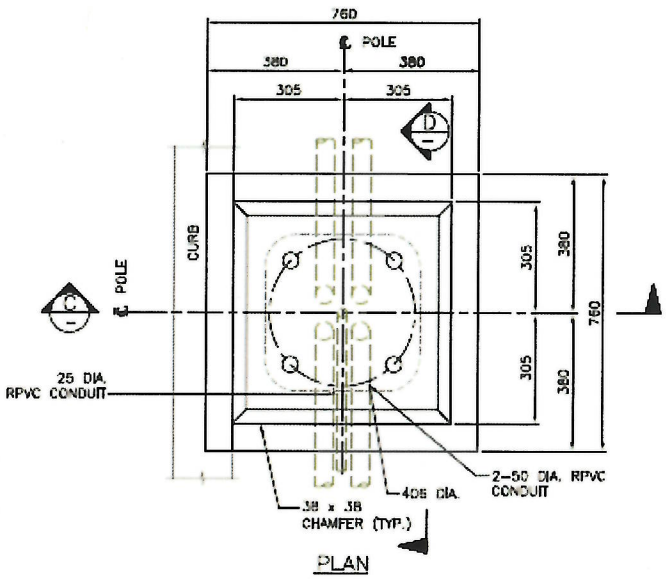

PLAN
POLE AT MID-BLOCK

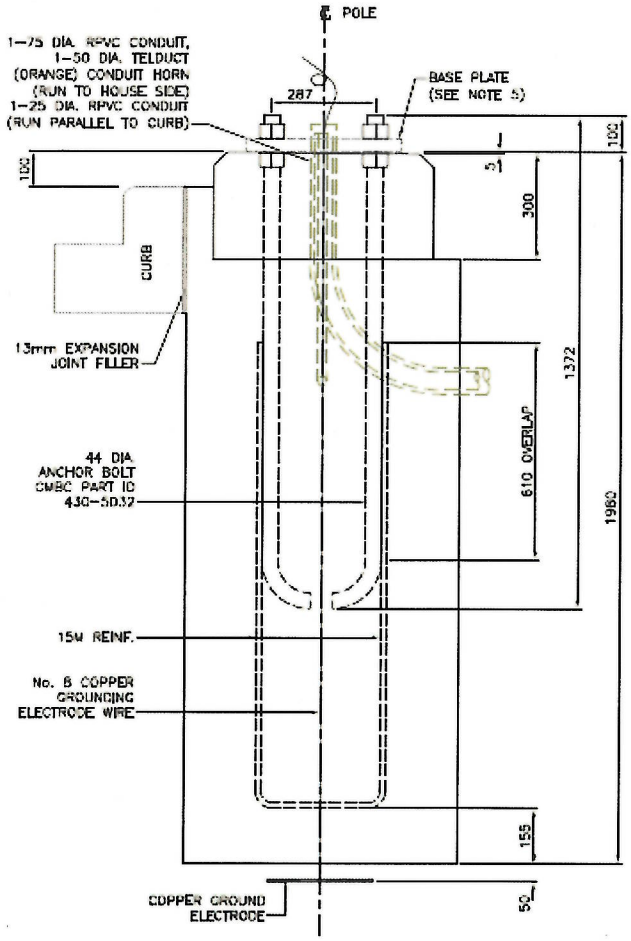

SECTION A
SCALE 1:10

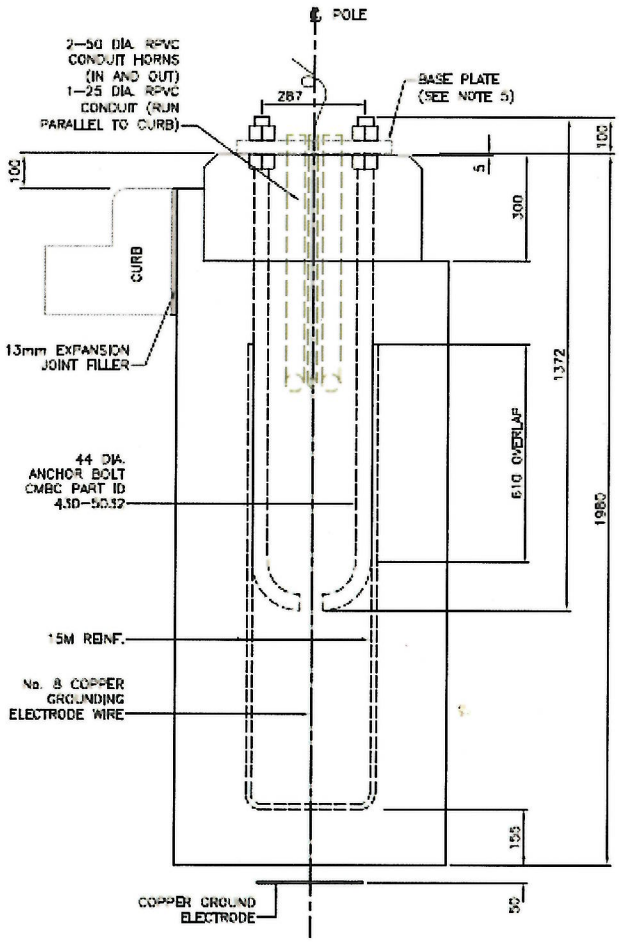

SECTION C
SCALE 1:10

A3E FOUNDATION DETAILS & NOTES

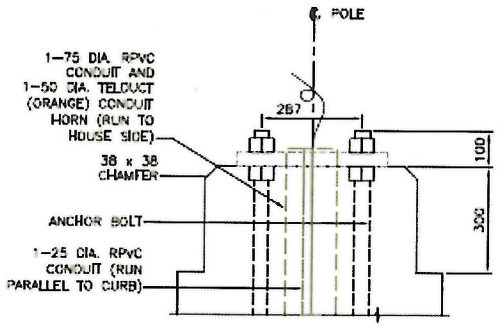

SECTION B
SCALE 1:10

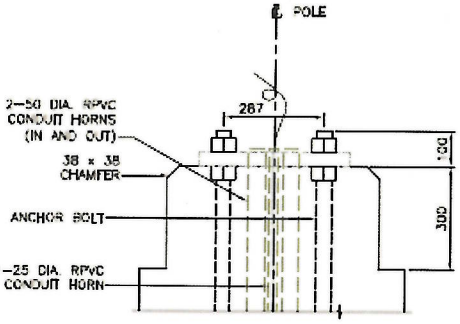

SECTION D
SCALE 1:10

NOTES

1. ALL DIMENSIONS ARE IN MILLIMETRES.
2. DESIGN HAS BEEN CHECKED FOR STRUCTURAL ADEQUACY. FOR EVERY APPLICATION, CMBC OR THEIR REPRESENTATIVE SHALL DETERMINE WHETHER THE SITE CONDITIONS ARE SUFFICIENT TO WARRANT THE USE OF THE FOUNDATION DETAIL.
3. CMBC OR THEIR REPRESENTATIVE SHALL INSPECT AND APPROVE THE INSTALLATION BEFORE CONCRETE IS POURED.
4. LOADING USED IN THE DESIGN IS AS PER CMBC LOADING, SHOWN IN TABLE BELOW:

CMBC POLE TYPE	MAXIMUM UNFACTORED LOAD (kN) *	MAXIMUM FACTORED LOAD (UNFACTORED x 1.65) kN *
A7E	6.672	11.009
A3E	13.345	22.019
A23E	26.690	44.039
A20E	35.585	58.715

*LOAD APPLIED AT 7.0m ABOVE POLE BASE. LOADS AND FACTOR PROVIDED BY CMBC.

5. CMBC BASE PLATE NOT INCLUDED IN FOUNDATION DESIGN AND WILL BE INSTALLED BY CMBC AFTER FOUNDATION CONSTRUCTION.
6. ALL MATERIALS TO BE SUPPLIED BY THE CONTRACTOR EXCEPT ANCHOR BOLTS, WHICH ARE PROVIDED BY CMBC.

EXCAVATION:

7. EXCAVATION TO BE HAND—DUG ONLY.
8. BACKFILL TO BE COMPACTED TO 95% MODIFIED PROCTOR DENSITY (ASTM SPECIFICATION D1557) OR BETTER.

CONCRETE:

9. CONCRETE SHALL HAVE A MINIMUM COMPRESSIVE STRENGTH OF 30MPa AT 28 DAYS.
10. ALL EXPOSED EDGES OF CONCRETE SHALL BE CHAMFERED 38mm UNLESS NOTED OTHERWIS
11. TOP SURFACE OF FOUNDATION SHALL BE SLOPED AWAY FROM ROAD : CMBC STANDARD 152mm RAKE IS PROVIDED BY 5mm SLOPE AS SHOWN. REFER TO CMBC FOUNDATION RAKE TABLE FOR NON—STANDARD RAKES.

REINFORCING STEEL:

12. REINFORCING STEEL SHALL CONFORM TO CAN/CSA—G30.18—09 GRADE 400R.
13. REINFORCING BARS TO BE SHAPED AS SHOWN AND TIED TO ANCHOR BOLTS WITH A MINIMUM 300mm OVERLAPPING AS SHOWN.
14. MINIMUM COVER TO REINFORCEMENT SHALL BE 70mm UNLESS NOTED OTHERWISE.

ANCHOR BOLTS:

15. ANCHOR BOLTS SHALL CONFORM TO CURRENT CMBC DRAWINGS SD—0053 AND SD—0054, AND SHALL HAVE A MINIMUM YIELD STRENGTH OF 400MPa.
16. ANCHOR BOLTS SHALL BE HOT—DIP GALVANIZED IN ACCORDANCE WITH CSA STANDARD CAN/CSA—G164—M92. NUTS SHALL BE ZINC—PLATED IN ACCORDANCE WITH ASTM STANDARD B633.
17. TWO NUTS SHALL BE EMPLOYED ON EACH BOLT. THE BOTTOM NUT SHALL PROTRUDE 3mm ABOVE THE SURFACE OF THE CONCRETE. THE TOP NUT SHALL BE THREADED COMPLETELY ON AND SECURED 1/4 TURN BEYOND HAND TIGHTENING.
18. ANCHOR BOLTS SHALL BE LOCATED WITH A TEMPLATE TO MAINTAIN CORRECT SPACING.

GROUNDING ELECTRODE:

19. GROUNDING ELECTRODE WIRE TO EXTEND A MINIMUM OF 500mm ABOVE TOP OF FOUNDATION.
20. CONNECT GROUNDING ELECTRODE WIRE TO COPPER GROUND ELECTRODE BY BRASS BRAZING.
21. SECONDARY GROUNDING ELECTRODE TO BE ADDED AS REQUIRED BY THE CITY OF VANCOUVER, AND SHALL BE LOCATED ADJACENT TO THE FOUNDATION.

EMBEDDED CONDUIT:

22. ALL INTERSECTION POLES TO HAVE 1—75mm RPVC AND 1—50mm TELDUCT (ORANGE) CONDUIT HORNS EMBEDDED, RUNNING TO HOUSE SIDE AND 1—25mm RPVC CONDUIT HORN RUNNING PARALLEL TO THE CURB. ALL MID—BLOCK POLE TO HAVE 2—50mm RPVC CONDUIT HORNS EMBEDDED, RUNNING IN AND OUT AS SHOWN AND 1—25mm RPVC CONDUIT HORN RUNNING PARALLEL TO THE CURB.

DRAWING NO.	DESCRIPTION
FND101C	FOUNDATION DETAILS FOR A3E STEEL POLE

A23E FOUNDATION

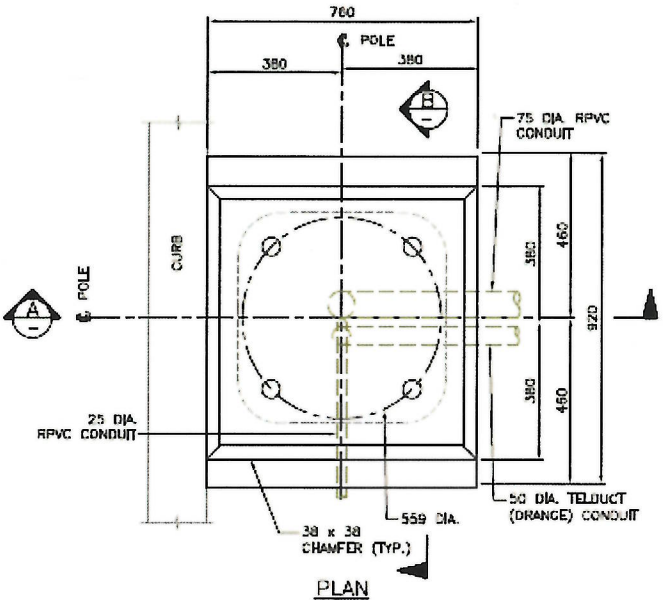

PLAN
POLE AT INTERSECTION

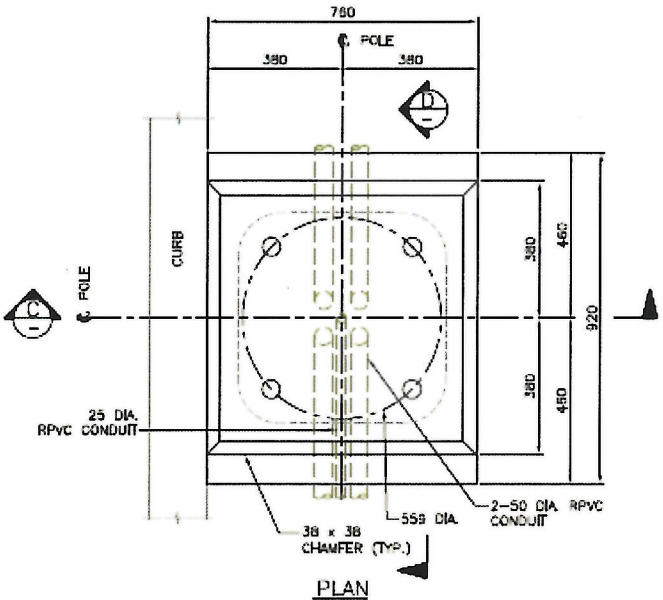

PLAN
POLE AT MID-BLOCK

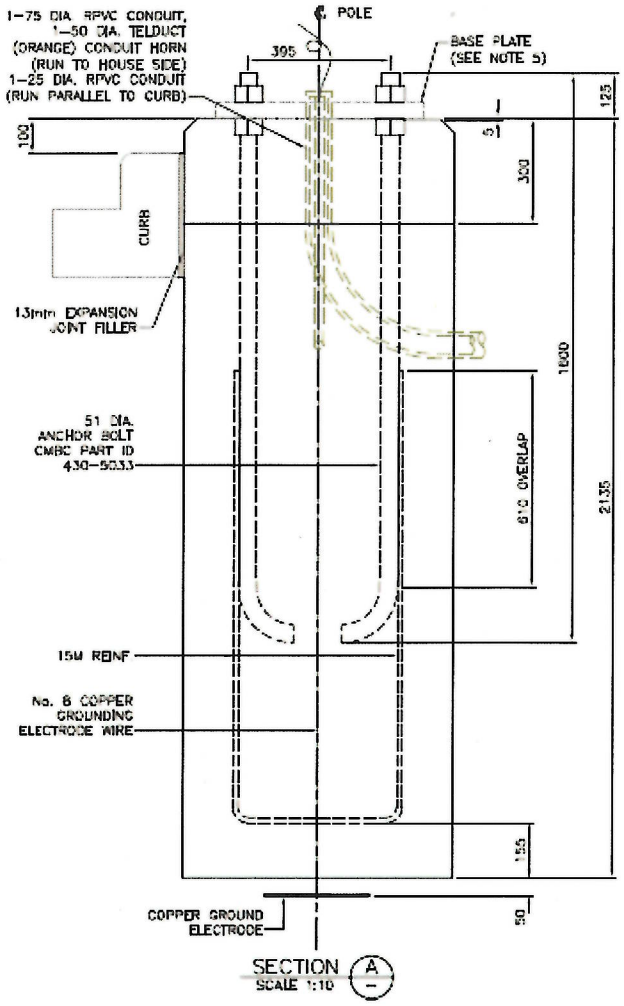

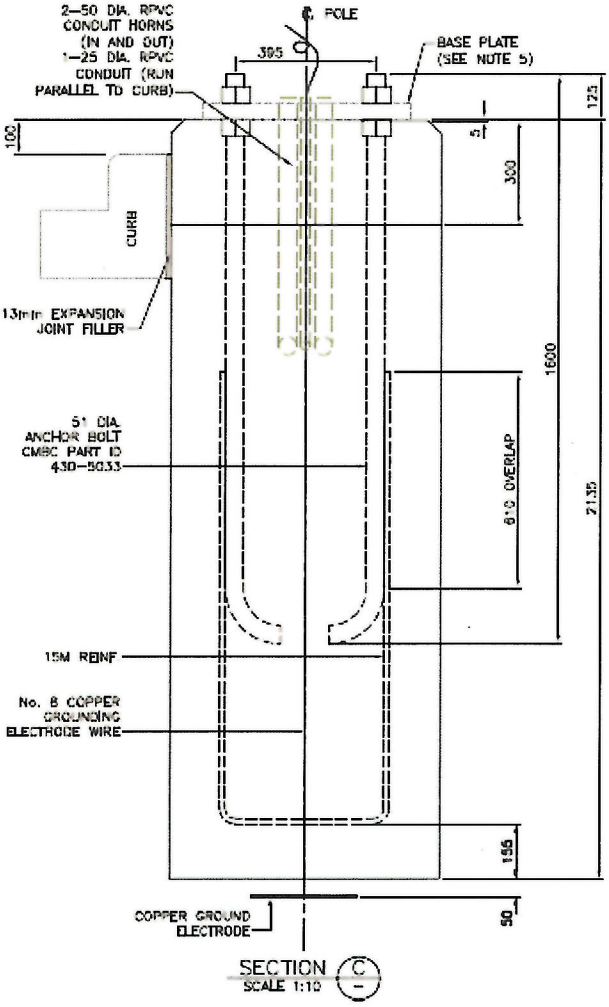

A23E FOUNDATION DETAILS & NOTES

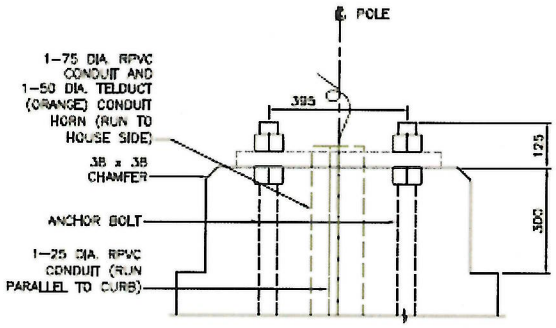

SECTION B
SCALE 1:10

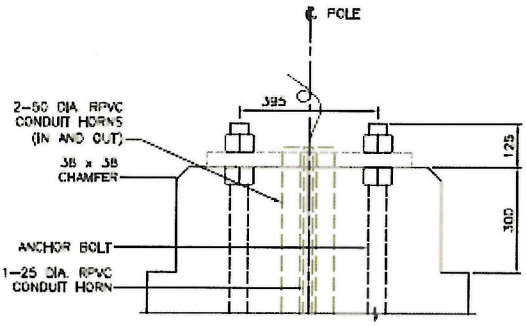

SECTION D
SCALE 1:10

NOTES

1. ALL DIMENSIONS ARE IN MILLIMETRES.
2. DESIGN HAS BEEN CHECKED FOR STRUCTURAL ADEQUACY. FOR EVERY APPLICATION, CMBC OR THEIR REPRESENTATIVE SHALL DETERMINE WHETHER THE SITE CONDITIONS ARE SUFFICIENT TO WARRANT THE USE OF THE FOUNDATION DETAIL.
3. CMBC OR THEIR REPRESENTATIVE SHALL INSPECT AND APPROVE THE INSTALLATION BEFORE CONCRETE IS POURED.
4. LOADING USED IN THE DESIGN IS AS PER CMBC LOADING, SHOWN IN TABLE BELOW:

CMBC POLE TYPE	MAXIMUM UNFACTORED LOAD (kN) *	MAXIMUM FACTORED LOAD (UNFACTORED x 1.65) kN *
A7E	6.672	11.009
A3E	13.345	22.019
A23E	26.690	44.039
A20E	35.585	58.715

*LOAD APPLIED AT 7.0m ABOVE POLE BASE. LOADS AND FACTOR PROVIDED BY CMBC.

5. CMBC BASE PLATE NOT INCLUDED IN FOUNDATION DESIGN AND WILL BE INSTALLED BY CMBC AFTER FOUNDATION CONSTRUCTION.
6. ALL MATERIALS TO BE SUPPLIED BY THE CONTRACTOR EXCEPT ANCHOR BOLTS, WHICH ARE PROVIDED BY CMBC.

EXCAVATION:

7. EXCAVATION TO BE HAND–DUG ONLY.
8. BACKFILL TO BE COMPACTED TO 95% MODIFIED PROCTOR DENSITY (ASTM SPECIFICATION D1557) OR BETTER.

CONCRETE:

9. CONCRETE SHALL HAVE A MINIMUM COMPRESSIVE STRENGTH OF 30MPa AT 28 DAYS.
10. ALL EXPOSED EDGES OF CONCRETE SHALL BE CHAMFERED 38mm UNLESS NOTED OTHERWISE.
11. TOP SURFACE OF FOUNDATION SHALL BE SLOPED AWAY FROM ROAD : CMBC STANDARD 152mm RAKE IS PROVIDED BY 5mm SLOPE AS SHOWN. REFER TO CMBC FOUNDATION RAKE TABLE FOR NON–STANDARD RAKES.

REINFORCING STEEL:

12. REINFORCING STEEL SHALL CONFORM TO CAN/CSA–G30.18–09 GRADE 400R.
13. REINFORCING BARS TO BE SHAPED AS SHOWN AND TIED TO ANCHOR BOLTS WITH A MINIMUM 300mm OVERLAPPING AS SHOWN.
14. MINIMUM COVER TO REINFORCEMENT SHALL BE 70mm UNLESS NOTED OTHERWISE.

ANCHOR BOLTS:

15. ANCHOR BOLTS SHALL CONFORM TO CURRENT CMBC DRAWINGS SD–0053 AND SD–0054, AND SHALL HAVE A MINIMUM YIELD STRENGTH OF 400MPa.
16. ANCHOR BOLTS SHALL BE HOT–DIP GALVANIZED IN ACCORDANCE WITH CSA STANDARD CAN/CSA–G164–M92. NUTS SHALL BE ZINC–PLATED IN ACCORDANCE WITH ASTM STANDARD B633.
17. TWO NUTS SHALL BE EMPLOYED ON EACH BOLT. THE BOTTOM NUT SHALL PROTRUDE 3mm ABOVE THE SURFACE OF THE CONCRETE. THE TOP NUT SHALL BE THREADED COMPLETELY ON AND SECURED 1/4 TURN BEYOND HAND TIGHTENING.
18. ANCHOR BOLTS SHALL BE LOCATED WITH A TEMPLATE TO MAINTAIN CORRECT SPACING.

GROUNDING ELECTRODE:

19. GROUNDING ELECTRODE WIRE TO EXTEND A MINIMUM OF 500mm ABOVE TOP OF FOUNDATION.
20. CONNECT GROUNDING ELECTRODE WIRE TO COPPER GROUND ELECTRODE BY BRASS BRAZING.
21. SECONDARY GROUNDING ELECTRODE TO BE ADDED AS REQUIRED BY THE CITY OF VANCOUVER, AND SHALL BE LOCATED ADJACENT TO THE FOUNDATION.

EMBEDDED CONDUIT:

22. ALL INTERSECTION POLES TO HAVE 1–75mm RPVC AND 1–50mm TELDUCT (ORANGE) CONDUIT HORNS EMBEDDED, RUNNING TO HOUSE SIDE AND 1–25mm RPVC CONDUIT HORN RUNNING PARALLEL TO THE CURB. ALL MID–BLOCK POLE TO HAVE 2–50mm RPVC CONDUIT HORNS EMBEDDED, RUNNING IN AND OUT AS SHOWN AND 1–25mm RPVC CONDUIT HORN RUNNING PARALLEL TO THE CURB.

DRAWING NO.	DESCRIPTION
FND102C	FOUNDATION DETAILS FOR A23E STEEL POLE

3

A20E FOUNDATION

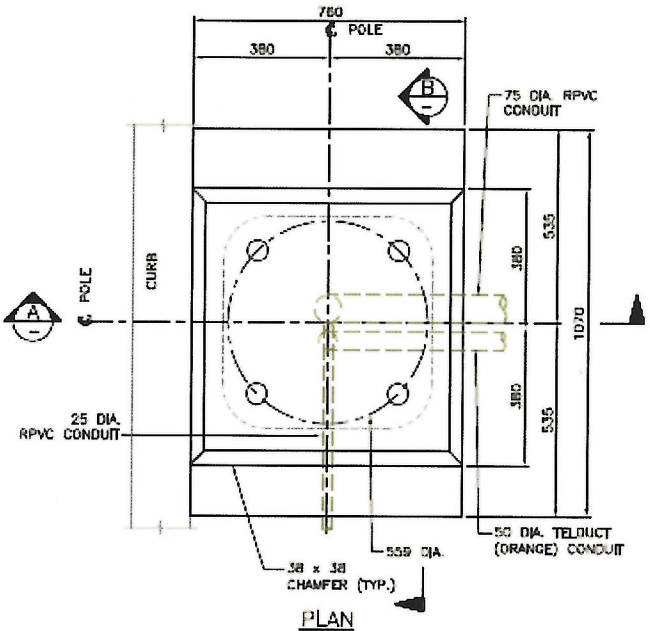

PLAN
POLE AT INTERSECTION

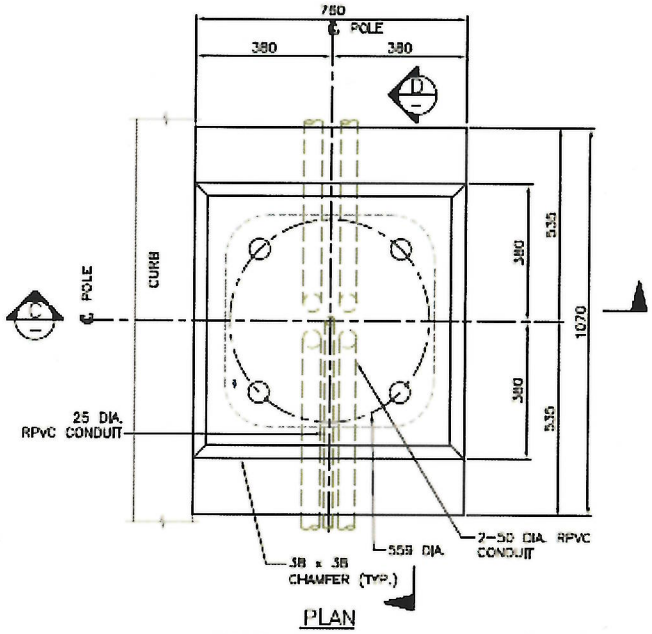

PLAN
POLE AT MID–BLOCK

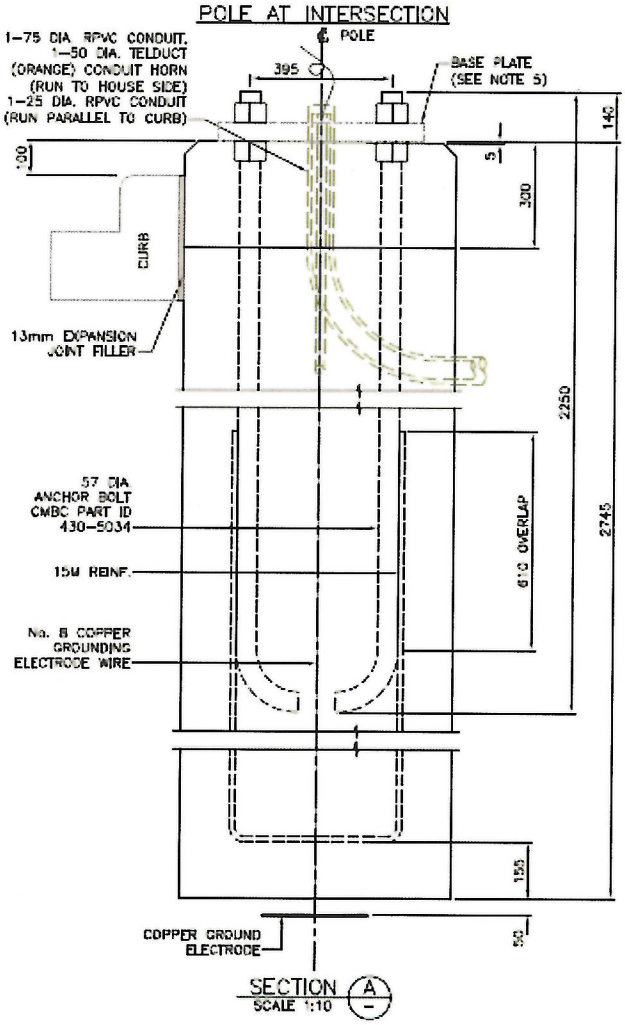

SECTION A
SCALE 1:10

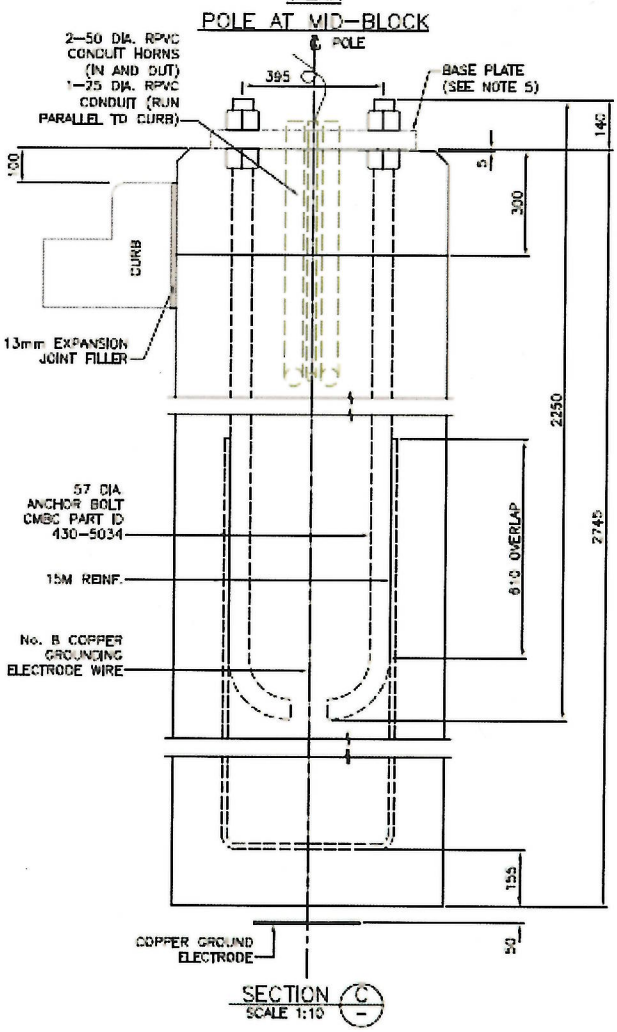

SECTION C
SCALE 1:10

A20E FOUNDATION DETAILS & NOTES

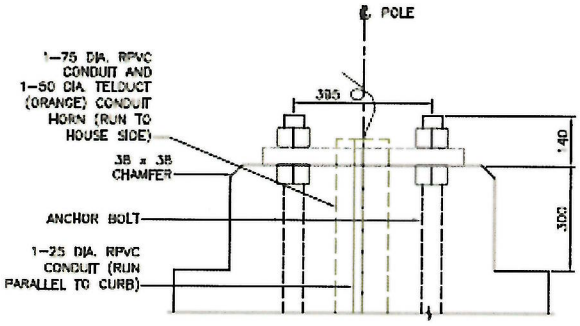

SECTION B
SCALE 1:10

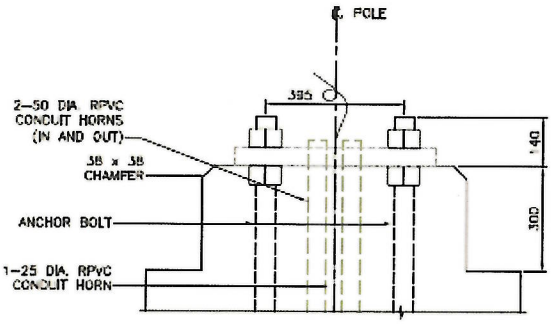

SECTION D
SCALE 1:10

NOTES

1. ALL DIMENSIONS ARE IN MILLIMETRES.
2. DESIGN HAS BEEN CHECKED FOR STRUCTURAL ADEQUACY. FOR EVERY APPLICATION, CMBC OR THEIR REPRESENTATIVE SHALL DETERMINE WHETHER THE SITE CONDITIONS ARE SUFFICIENT TO WARRANT THE USE OF THE FOUNDATION DETAIL.
3. CMBC OR THEIR REPRESENTATIVE SHALL INSPECT AND APPROVE THE INSTALLATION BEFORE CONCRETE IS POURED.
4. LOADING USED IN THE DESIGN IS AS PER CMBC LOADING, SHOWN IN TABLE BELOW:

CMBC POLE TYPE	MAXIMUM UNFACTORED LOAD (kN) *	MAXIMUM FACTORED LOAD (UNFACTORED x 1.60) kN *
A7E	6.872	11.009
A3E	13.345	22.019
A23E	26.690	44.039
A20E	35.585	58.715

*LOAD APPLIED AT 7.0m ABOVE POLE BASE. LOADS AND FACTOR PROVIDED BY CMBC.

5. CMBC BASE PLATE NOT INCLUDED IN FOUNDATION DESIGN AND WILL BE INSTALLED BY CMBC AFTER FOUNDATION CONSTRUCTION.
6. ALL MATERIALS TO BE SUPPLIED BY THE CONTRACTOR EXCEPT ANCHOR BOLTS, WHICH ARE PROVIDED BY CMBC.

EXCAVATION:

7. EXCAVATION TO BE HAND–DUG ONLY.
8. BACKFILL TO BE COMPACTED TO 95% MODIFIED PROCTOR DENSITY (ASTM SPECIFICATION D1557) OR BETTER.

CONCRETE:

9. CONCRETE SHALL HAVE A MINIMUM COMPRESSIVE STRENGTH OF 30MPa AT 28 DAYS.
10. ALL EXPOSED EDGES OF CONCRETE SHALL BE CHAMFERED 38mm UNLESS NOTED OTHERWISE.
11. TOP SURFACE OF FOUNDATION SHALL BE SLOPED AWAY FROM ROAD : CMBC STANDARD 152mm RAKE IS PROVIDED BY 5mm SLOPE AS SHOWN. REFER TO CMBC FOUNDATION RAKE TABLE FOR NON–STANDARD RAKES.

REINFORCING STEEL:

12. REINFORCING STEEL SHALL CONFORM TO CAN/CSA–G30.18–09 GRADE 400R.
13. REINFORCING BARS TO BE SHAPED AS SHOWN AND TIED TO ANCHOR BOLTS WITH A MINIMUM 300mm OVERLAPPING AS SHOWN.
14. MINIMUM COVER TO REINFORCEMENT SHALL BE 70mm UNLESS NOTED OTHERWISE.

ANCHOR BOLTS:

15. ANCHOR BOLTS SHALL CONFORM TO CURRENT CMBC DRAWINGS SD–0053 AND SD–0054, AND SHALL HAVE A MINIMUM YIELD STRENGTH OF 400MPa.
16. ANCHOR BOLTS SHALL BE HOT–DIP GALVANIZED IN ACCORDANCE WITH CSA STANDARD CAN/CSA–G164–M92. NUTS SHALL BE ZINC–PLATED IN ACCORDANCE WITH ASTM STANDARD B633.
17. TWO NUTS SHALL BE EMPLOYED ON EACH BOLT. THE BOTTOM NUT SHALL PROTRUDE 3mm ABOVE THE SURFACE OF THE CONCRETE. THE TOP NUT SHALL BE THREADED COMPLETELY ON AND SECURED 1/4 TURN BEYOND HAND TIGHTENING.
18. ANCHOR BOLTS SHALL BE LOCATED WITH A TEMPLATE TO MAINTAIN CORRECT SPACING.

GROUNDING ELECTRODE:

19. GROUNDING ELECTRODE WIRE TO EXTEND A MINIMUM OF 500mm ABOVE TOP OF FOUNDATION.
20. CONNECT GROUNDING ELECTRODE WIRE TO COPPER GROUND ELECTRODE BY BRASS BRAZING.
21. SECONDARY GROUNDING ELECTRODE TO BE ADDED AS REQUIRED BY THE CITY OF VANCOUVER, AND SHALL BE LOCATED ADJACENT TO THE FOUNDATION.

EMBEDDED CONDUIT:

22. ALL INTERSECTION POLES TO HAVE 1–75mm RPVC AND 1–50mm TELDUCT (ORANGE) CONDUIT HORNS EMBEDDED, RUNNING TO HOUSE SIDE AND 1–25mm RPVC CONDUIT HORN RUNNING PARALLEL TO THE CURB. ALL MID–BLOCK POLE TO HAVE 2–50mm RPVC CONDUIT HORNS EMBEDDED, RUNNING IN AND OUT AS SHOWN AND 1–25mm RPVC CONDUIT HORN RUNNING PARALLEL TO THE CURB.

DRAWING NO.	DESCRIPTION
FND103C	FOUNDATION DETAILS FOR A20E STEEL POLE

PILASTER DETAIL FOR UNDERGROUND DC LATERALS AT STEEL TERMINAL POLE

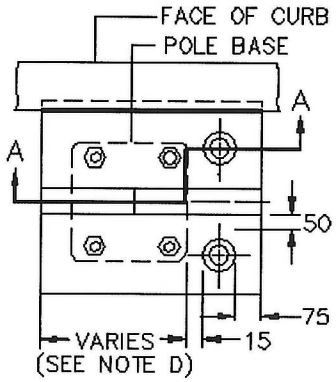

TOP VIEW

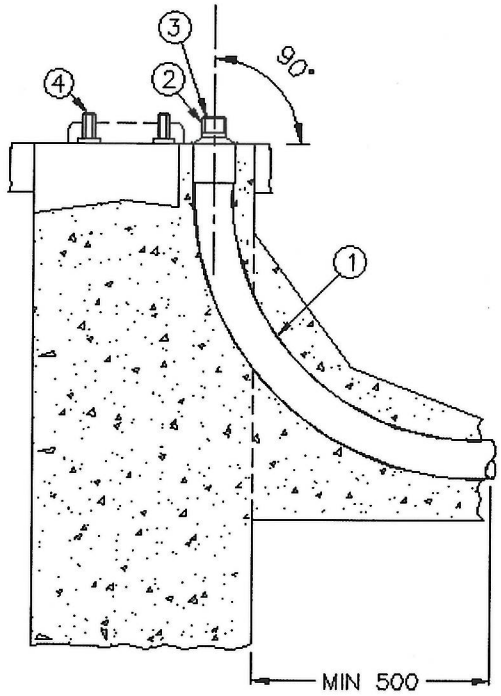

SECTION A–A

NOTES:

A. –PILASTER TO BE LOCATED AWAY FROM ONCOMING TRAFFIC OR AS SPECIFIED IN CONSTRUCTION DRAWING.

B. –MINIMUM OF 75mm CONCRETE AROUND DUCTS.

C. –CONTRACTOR IS TO BE LIABLE FOR ANY DAMAGE TO THE EXISTING FOUNDATION.

D. –EXISTING FOUNDATION: PILASTER ADAPTER TO CLEAR POLE BASE PLATE BY 15mm.
–NEW FOUNDATION: USE DIMENSIONS
A7E = 500mm A3E = 611mm
A23E = 768mm A20E = 843mm

E. –ALL DIMENSIONS ARE IN MILLIMETERS.

F. –100mm–75mm ADAPTER IS SUPPLIED BY OWNER

G. –ADAPTER SHALL BE INSTALLED AS SUCH THAT THE LOW 45 DEGREE REDUCING LINE FLUSH WITH FINISH GRADE. SEE DETAIL 1.

H. –END OF ADAPTER SHALL BE CAPPED TO PREVENT DEBRIS FROM FALLING IN.

REFERENCE DRAWINGS:

FND100C FOR A7E FOUNDATION
FND101C FOR A3E FOUNDATION
FND102C FOR A23E FOUNDATION
FND103C FOR A20E FOUNDATION

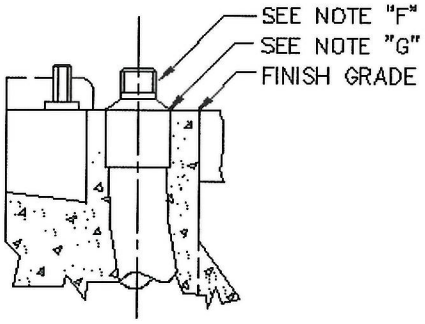

DETAIL 1

Item No.	Part ID	Quantity	Part Description
1		N/A	PVC DUCTING TO BE BUILT WITH A MIN. 900mm RADIUS FOR 90 DEG. BENDS. USE 50, 75, OR 100mm DIA. DUCT. (SUPPLIED BY CONTRACTOR)
2		N/A	ADAPTER TO MARRY UP TO 50, 75, OR 100mm DIA. RIGID STEEL CONDUITS (A 75mm NIPPLE MAY BE USED FOR 75-100mm CONNECTIONS) (SUPPLIED BY CMBC)
3		N/A	PLASTIC PLUG OR CAP USED TO SEAL CONDUIT (SUPPLIED BY CONTRACTOR)
4		N/A	ANCHOR BOLT (NEW FOUNDATION) (SUPPLIED BY CMBC)

DRAWING NO.	DESCRIPTION
FND104C	PILASTER DETAIL FOR UNDERGROUND DC LATERALS AT STEEL TERMINAL POLE

Attachment 6 – Geotechnical Recommendation for CoV Standard Pole Base

Joo, Buho

From: Charles Ng <cng@thurber.ca>
Sent: Wednesday, December 09, 2015 11:24 AM
To: Buho Joo
Cc: Monty Knaus; David Tara; David Hill; Fitch, Devan; Charles Ng
Subject: COV Pole base installation: review of SOP and specification (Thurber File 115-8143)

Hi Buho,

In this case, we consider that friction angle of 33° and soil unit weight of 19 kN/m^{3} for the excavated material can be used for the design.

Regards,

Charles Ng, M.Eng., P.Eng.
Associate / Geotechnical Engineer

Thurber Engineering Ltd.
900, 1281 West Georgia Street
Vancouver, BC V6E 3J7
T. 604 684-4384 ext. 152 | F. 604 684 5124
www.thurber.ca

From: Buho Joo [mailto:JooB@mmm.ca]
Sent: December-09-15 11:15 AM
To: Charles Ng <cng@thurber.ca>
Cc: Monty Knaus <KnausM@mmm.ca>; David Tara <dtara@thurber.ca>; David Hill <dhill@thurber.ca>; Fitch, Devan <Devan.Fitch@vancouver.ca>
Subject: RE: COV Pole base installation: review of SOP and specification (Thurber File 115-8143)

Charles,

I don't think it is guaranteed that the crashed stone is used for backfill all the times.
The preferred option for crew will be the original excavated material if it satisfy the requirement form SOP.
In this case, should I use 32 degree friction angle and 21 kN/m3 density?

Regards,

Buho Joo, P.Eng
Senior Project Engineer

MMM Group Limited
1045 Howe Street, Suite 700
Vancouver, BC, V6Z2A9 Canada
T +1 604-685-9381 #4175
F +1 604-683-8655
joob@mmm.ca

www.mmmgrouplimited.com | www.wspgroup.ca

Please consider the environment before printing...

From: Charles Ng [mailto:cng@thurber.ca]
Sent: Wednesday, December 09, 2015 10:59 AM
To: Buho Joo
Cc: Monty Knaus; David Tara; David Hill; Fitch, Devan
Subject: COV Pole base installation: review of SOP and specification (Thurber File 115-8143)

Hi Buho,

The standard operating procedure indicates that base excavations can be backfilled using either the excavated material provided it consists of granular soil with a maximum fines content of 8% or using crushed gravel granular base in accordance with MMCE Section 31-05-17 Clause 2.10.

Based on our review, we consider your assumptions to be reasonable if crushed gravel granular base is used as backfill. It may be possible to use a higher friction angle of 38° and a total unit weight of 21 kN/m^3 for the crushed gravel granular base provided that it is properly compacted with records of QC testing or similar.

However, your assumed values may be on the aggressive side when excavated granular material is used to backfill the base excavation. It may be necessary to reduce the design friction angle to about 32° to 33° if the excavated material is being reused.

Regards,

Charles Ng, M.Eng., P.Eng.
Associate / Geotechnical Engineer

Thurber Engineering Ltd.
900, 1281 West Georgia Street
Vancouver, BC V6E 3J7
T. 604 684-4384 ext. 152 | F. 604 684 5124
www.thurber.ca

From: Buho Joo [mailto:JooB@mmm.ca]
Sent: December-08-15 4:51 PM
To: Charles Ng <cng@thurber.ca>
Cc: Monty Knaus <KnausM@mmm.ca>; David Tara <dtara@thurber.ca>; David Hill <dhill@thurber.ca>; Fitch, Devan <Devan.Fitch@vancouver.ca>
Subject: RE: COV Pole base installation: review of SOP and specification (Thurber File 115-8143)

Yes,

I did use the passive soil resistance, and multiplied by 3 in consideration of the tributary area of soil.

Regards,

Buho Joo, P.Eng
Senior Project Engineer

MMM Group Limited
1045 Howe Street, Suite 700
Vancouver, BC, V6Z2A9 Canada
T +1 604-685-9381 #4175
F +1 604-683-8655
joob@mmm.ca

www.mmmgrouplimited.com | www.wspgroup.ca

Please consider the environment before printing…

From: Charles Ng [mailto:cng@thurber.ca]
Sent: Tuesday, December 08, 2015 4:41 PM
To: Buho Joo
Cc: Monty Knaus; David Tara; David Hill; Fitch, Devan; Charles Ng
Subject: COV Pole base installation: review of SOP and specification (Thurber File 115-8143)

Hi Buho,

Before we provide our comments, could you please confirm the use of the soil parameters? Are you interpreting passive soil resistance to evaluate lateral stability of the pole base or something else? Please confirm. Thanks.

-Charles

From: Fitch, Devan [mailto:Devan.Fitch@vancouver.ca]
Sent: December-08-15 12:39 PM
To: Buho Joo <JooB@mmm.ca>; Charles Ng <cng@thurber.ca>
Cc: Monty Knaus <KnausM@mmm.ca>; David Tara <dtara@thurber.ca>; David Hill <dhill@thurber.ca>
Subject: RE: COV Pole base installation: review of SOP and specification (Thurber File 115-8143)

I would add that with these parameters MMM is having difficulty with achieving sufficient resistance for some pole bases, so it is important that the assumed values are not unnecessarily conservative.

Devan Fitch, P.Eng., M.A.Sc., PMP
Project Manager, Powell St. & Viaducts
Engineering Services, City of Vancouver, V5Z OB4
tel 604 871 6998 | *fax* 604 873 7395
email devan.fitch@vancouver.ca | www.vancouver.ca

From: Buho Joo [mailto:JooB@mmm.ca]
Sent: Tuesday, December 08, 2015 12:15 PM
To: Charles Ng
Cc: Monty Knaus; David Tara; David Hill; Fitch, Devan
Subject: RE: COV Pole base installation: review of SOP and specification (Thurber File 115-8143)

Charles,

For the assessment of stability for CoV pole bases, we did assume the geotechnical parameters as below;

- γs (Soil weight) : 20kN/m3
- Fricition angle : 35 degree

Can you let me know if it is considered to be consistent to what you described in "Confirmation of the geotechnical resistance of soil" in the attached?
If not, please advise what I have to use?

Regards,

Buho Joo, P.Eng
Senior Project Engineer

MMM Group Limited
1045 Howe Street, Suite 700
Vancouver, BC, V6Z2A9 Canada
T +1 604-685-9381 #4175
F +1 604-683-8655
joob@mmm.ca

www.mmmgrouplimited.com | www.wspgroup.ca

Please consider the environment before printing…

From: Charles Ng [mailto:cng@thurber.ca]
Sent: Thursday, July 09, 2015 4:29 PM
To: Buho Joo
Cc: Monty Knaus; David Tara; David Hill; Charles Ng
Subject: COV Pole base installation: review of SOP and specification (Thurber File 115-8143)

Hi Buho,

Please find attached the SOP with our preliminary input for review and comments. Let us know if you need further information.

You have a wonderful holiday!

Regards,

Charles Ng, M.Eng., P.Eng.
Associate / Geotechnical Engineer

Thurber Engineering Ltd.
900, 1281 West Georgia Street
Vancouver, BC V6E 3J7
T. 604 684-4384 ext. 152 | F. 604 684 5124
www.thurber.ca

From: Buho Joo [mailto:JooB@mmm.ca]
Sent: July-07-15 10:11 AM
To: Charles Ng
Cc: Monty Knaus; David Tara
Subject: RE: COV Pole base installation: review of SOP and specification (Thurber File 115-8143)

Charles,

Attached is the draft version of the revised SOP.
I colored red for the part looked after by Thurber; mainly two items

- Actions when they encounter the contaminated soil. You may add the reference for this as necessary.
- Verification of the existing soil on the bed, and backfill.

I am still working on it, but I think it is good enough for you start with.
We plan to submit the draft version by end of the week this week.
As I will be on my vacation starting July 10th, if you can give back to us by noon on July 9th, it would be appreciated.

Should you have any question, please call me.

Regards,
Buho Joo, M.Eng., P.Eng.
Senior Project Engineer (Vancouver)
Bridges

604.676.1540 x 4175 | f: 604.683.8655
MMM Group Limited

APPENDIX 15
CITY'S ELECTRICAL SAFETY PLAN ("ESP")

See attached.

ELECTRICAL SAFETY PROGRAM

for Designated City Owned or Operated Facilities

DOCUMENT REVISION HISTORY

REVISION	REVISION DESCRIPTION	BY	DATE	APPROVED	DATE
Rev 8.0	Final Version	CTT	June 7, 2019		
Rev 8.1	Updated PLEAP form – WorkSafeBC variance	CTT	June 12, 2019		

MANAGEMENT LEADERSHIP COMMITMENT & SPONSORSHIP

ELECTRICAL SAFETY PROGRAM

This *ELECTRICAL SAFETY PROGRAM (ESP)* has been approved for implementation at City of Vancouver designated City owned or operated facilities under the care and control of:

_____ _____
Nick Kassam Date
General Manager, Real Estate Facilities Management,
City of Vancouver

_____ _____
Name: Taryn Scollard Date
Director, Engineering Services
City of Vancouver

_____ _____
Name: Shauna Wilton Date
Director, Vancouver Park Board

_____ _____
Name: Grahame Hamilton Date
REFM, Electrical Safety Program Manager
City of Vancouver

_____ _____
Name: Gruja Blagojevic Date
Engineering, Electrical Safety Program Manager
City of Vancouver

_____ _____
Name: Robert Bartlett Date
Robert Bartlett, Risk Manager
City of Vancouver

_____ _____
Name: Andrew Naklicki Date
Andrew Naklicki, Chief Human Resources Manager
City of Vancouver

Table of Contents

Appendices

List of Figures

List of Tables

List of Forms

1.0 PURPOSE, PRINCIPLES & SCOPE

1.1. Purpose

This *Electrical Safety Program (ESP)* shall be used to assist in establishing *standard operating and maintenance practices and procedures* for working with *energized electrical equipment* and systems that are low or high voltage. The intent is to prevent exposure to and protect the worker from electrical *shock* and *arc flash* hazards.

The priority is to avoid performing *energized electrical work*, or reduce risk related to the *energized electrical work task* to *As Low As Reasonably Practicable (ALARP)* unless de-energizing introduces additional hazards or increased risk or the task is infeasible to be completed in a de-energized state due to equipment design or operational limitations. The potential exposure will be mitigated, or risk reduced through the use of effective *preventive and protective risk control methods*.

Adhering to these electrical safety related work practices ensures that *electric shock, arc flash* and *associated arc blast* or other injuries associated with either direct or indirect electrical contact are minimized.

The *ESP* provides direction, policies and practices for electrical safety. Each City of Vancouver employee and contractor is expected to take reasonable care to protect themselves, other employees, contractors and the general public against injury or damage to health.

This *Electrical Safety Program (ESP)* has been approved for implementation at City of Vancouver under the care and control of the *Electrical Safety Steering Committee (ESSC)*.

1.2. Principles

The guiding principles of this *Electrical Safety Program* are:

- Electrical work shall only be performed on de-energized electrical conductors and circuit parts (e.g. *Process for Establishing and Verifying an Electrically Safe Work Condition*) unless de-energizing introduces additional hazards or increased risk or is infeasible due to equipment design, operational limitations, or the voltage is less than 30V.
- Electrical equipment must be CSA approved or equivalently approved and installed and maintained to the *C22.1, Canadian Electrical Code (CE Code) Part I* and any specific requirements of the "*Jurisdiction Having Authority*".

- Portable cord-and-plug-connected electrical equipment and cord sets (extension cords) shall be visually inspected before use. Where required, a GFCI shall be used.
- A *Risk Assessment Procedure (RAP)* shall be applied and documented to the justified *energized electrical work task* to assess consequence (e.g. harm) and *likelihood of occurrence* and reduce risk to as low as reasonably practicable (ALARP) by applying the *hierarchy of preventive and protective risk control methods*.
    1. Elimination (De-energize);
    2. Substitution;
    3. Engineering "Safety by Design;"
    4. Awareness, warning signs and barricading;
    5. Administrative Controls, *training* and *procedures*;
    6. PPE, tools and equipment with appropriate care, use and maintenance.
- Before working on energized electrical conductors or circuit parts and as a component of the Risk Assessment Procedure, Arc Flash and Shock Risk Assessments shall be completed to determine additional protective measures including work practices, Boundaries and requirements for Electrical Specific PPE, Tools & Equipment when inside the Boundaries in order to reduce risk. These shall be documented in the Electrical Energized Job Risk Assessment form (EEJRA).
- Energized electrical work may require the use of an Energized Electrical Work Permit (EEWP). In most cases these work tasks are non-routine.
- An *Electrical Work Zone* shall be established for *energized electrical work tasks* with red "*Danger*" tape, tagging, barriers, cones, closed electrical room doors, or other methods of securing the area at the *Arc Flash Boundary,* ten feet, whichever is furthest away. Electrical room walls/doors can also be used to establish an *Electrical Work Zone*.
- High voltage *overhead power lines* and other *high voltage substation equipment* will require additional industry accepted "Work Authorization or Permit" systems and practices/*procedures* to be followed or to be implemented to control access when these systems are energized. Workers shall maintain regulated *Limits of Approach as required by WorkSafeBC Part 19 Electrical Safety*, *Section 19.24.*
- All *electrical conductors and circuit parts* shall be considered energized (e.g. voltage present) until proven otherwise by testing for *absence of voltage* and *temporary*

protective grounds applied when required. Always TEST-BEFORE-TOUCH! Testing for *absence of voltage* is *energized electrical work*.

- Workers shall be qualified, competent and authorized for the *work tasks* they undertake, including the ability to identify the electrical hazards related to the *work task*.
- All *energized electrical work* shall be planned and if a *procedure* is required for the *work task* it shall be documented and filed for record purposes and future use.
- *Job Safety Planning* shall be documented by the Qualified Electrical Worker (QEW) and will include identification and analysis of the electrical hazards (e.g. *shock*, and *arc flash* with associated *blast*) for each *work task*, documenting each *work task's Shock Risk Assessment* and *Arc Flash Risk Assessment* prior to beginning work, and identifying appropriate work procedures, special precautions and energy source controls. The *Job Safety Plan* will be documented on a *work task* specific *Energized Electrical Job Risk Assessment (EEJRA)* form.
- Job Briefing for a specific *energized electrical work task* where multiple QEWs or QIWs are involved can be completed by reviewing a *work task* specific *Energized Electrical Job Risk Assessment (EEJRA)* form with all workers involved.
- Electrical equipment shall be maintained in good working order and electrical protective equipment (e.g. circuit breakers, relays, etc.) shall be tested on a determined frequency or as required per a COV defined maintenance strategy to ensure that it will perform as expected and designed.
- Personnel shall receive appropriate workplace electrical safety training and technical skills training depending on their role. Occupational First Aid (OFA) Level I or II training is required based on City of Vancouver requirements.
- Appropriate Electrical Specific PPE, Tools & Equipment shall be selected for the work task.
- *Electrical Specific PPE, Tools & Equipment* must be readily available, properly cared for, maintained and used. It must be inspected prior to use.
- *Arc flash* and *shock* mitigation for electrical equipment shall be considered and incorporated into new facilities or upgrades (e.g. "*Safety by Design*").
- Emergency response requirements for *electrical incidents* and *methods of release* related to *shock* shall be reviewed with affected employees and contractors, and training provided.

- *Electrical incidents* shall be reported by workers to their supervisors and fully investigated in compliance with City of Vancouver *Safety Management System*.
- *Management Of Change* is required to ensure that changes to the power distribution system that can affect worker exposure to electrical hazards is controlled and approved.
- An annual audit shall be conducted on these Principles and this Program. A continuous improvement model and audit process is promoted and is provided in Appendix W.

1.3. Scope

All employees and contractor personnel performing electrical work at any and all City of Vancouver designated owned or operated facilities or sites shall comply with the minimum requirements contained in this *ESP*. The City of Vancouver employees and contractors must follow all applicable *Provincial OH&S Acts, Standards, Regulations, Legislation & Codes*.

The *rules* and *policies* apply to all employees, and where applicable, to individuals contracted to perform work for the City of Vancouver.

This *Electrical Safety Program* applies to all low voltage (≤750 volts to ground) and high voltage (>750 volts to ground) energized electrical power distribution and utilization equipment. This includes the use of *portable cord-and-plug-connected electrical equipment*.

The *rules* and *policies* outlined in the *ESP* are the minimum standards to be maintained. Conditions not specifically mentioned shall be governed by *standard operating procedures*, *practices*, *standard instructions*, and *directives* which are supplementary, but do not contravene these rules and policies or applicable *Provincial safety legislation*.

Each employee and contractor has the right and duty to refuse to complete a *work task* or operate equipment that the worker believes to be hazardous. It is the duty of all employees and contractors to know the *rules* and *policies*, to work according to the *rules* and *policies*, and to insist that others observe the *rules* and *policies*. Any unsafe acts or incidents must be reported to their Supervisor.

2.0 MANAGEMENT OF THE ELECTRICAL SAFETY PROGRAM (ESP)

2.1. Policy

City of Vancouver Management is committed to ensuring the *Health and Safety* of all personnel with respect to electrical safety. This *ESP* has been identified as a component of the City of Vancouver corporate *Occupational Health & Safety Management System*, and therefore requires a comprehensive management system approach that must include:

- Written *Electrical Safety Program*;
- Assigned *Electrical Safety Program Manager(s) and Co-ordinators*;
- Constituted *Electrical Safety Steering Committee*;
- Documented *Risk Assessment Procedure (RAP)*;
- Written *procedures as required*;
- Appropriate *training*;
- *Incident reporting and management* to closure;
- *Emergency response training*;
- *Monitoring of performance*;
- Non-compliance events and enforcement;
- *Management Of Change* to regulatory, process and operation changes affecting the *ESP* which will include electrical protective device setting changes, and electrical drawings; and
- *Annual Program Audit* and review by the *Electrical Safety Steering Committee* (or equivalent).

This *ESP* will be utilized and enforced at all City of Vancouver facilities and/ or sites. Non-adherence to this *ESP* may result in disciplinary action up to and including termination.

This ESP is consistent with the CSA Z462 Workplace electrical safety Standard, and requirements of applicable Jurisdictional Acts, Standards, Regulations, Legislation, Codes and other Industry Standards which are designed to protect workers from the risks associated with electricity.

2.2. Electrical Safety Program Manager(s) / Coordinator(s)

Designated *Electrical Safety Program Managers* will be assigned responsibility to ensure the development, implementation and maintenance of the *ESP occurs*. These persons will be the central contact within their Department related to any changes to the *ESP*. The ESP Co-ordinators will report back to the ESP Manager(s).

The ESP Managers and Coordinators will be responsible for ensuring the COV ESP is consistent with the requirements of all Legislation and the application of the most current revision of applicable Standards.

The Electrical Safety Program Managers or Co-ordinators require electrical power system qualification training and knowledge as an Electrical Engineer, Electrical Technologist or Journeyman Electrician.

There will be a designated Chair assigned for formal Electrical Safety Steering Committee (ESCC) meetings which can be rotated between specific ESP Managers/Coordinators.

If changes are required to the ESP, ensures that the *Management Of Change (MOC)* process is utilized for change implementation and the form in *Appendix Z* is utilized.

Ensures that ESP audits are occurring.

2.3. Electrical Safety Steering Committee (ESSC)

A *Corporate ESSC* will be appointed by Management with member(s) from each City of Vancouver major Department that oversee electrical operations. The *ESSC* will communicate information as required to the applicable *Joint Health & Safety Committee* where a *Joint Health & Safety Committee* is in place. The overseeing of this *ESP* will be the responsibility of the *ESSC*, which may be comprised of representatives from Engineering Services, REFM Electrical, Park Board, Arts Culture & Community Services, Organizational Safety, and Operations Support and Safety Branch (OSSB).

The *ESSC* is responsible to ensure that:

- This *ESP* is developed and implemented.
- This *ESP* is performing as it is intended and any ongoing maintenance is addressed.
- The ESSC meets at least annually or more frequently as required.
- All electrical equipment and systems used are installed and maintained to applicable Standards, (e.g. *C22.1, CE Code Part I*) and are *CSA approved* or equivalently approved.
- Existing electrical equipment maintenance practices and requirements are reviewed

and recommendations to the affected stakeholders are made.

- The appropriate *Electrical Specific PPE, Tools, and Equipment* are provided to all workers who may be affected by the hazards associated with electricity and are fit for use.
- The appropriate electrical safety, technical and skill training is provided for all affected workers, and their competency validated.
- Unqualified workers shall be trained appropriately for *electrical safety awareness*.
- *Annual Program Audits* are completed, and corrective actions implemented.
- Changes to the *ESP* are reviewed and approved following a *Management Of Change (MOC)* process. The ESSC will review and approve all changes to the program, consult with the relevant safety committees and other stakeholders as required, and advise affected stakeholders of the approved changes.

3.0 ROLES AND RESPONSIBILITIES

Personnel shall have defined roles and responsibilities with respect to this *ESP*. The intent is to ensure at each City of Vancouver worksite that management and all workers clearly understand their responsibilities with respect to electrical hazards in the workplace. Due to the range of different City of Vancouver Departments they may not all have all of the roles defined in this section.

3.1. Senior Managers/Directors

- Provides resources and supports implementation of this *ESP within their respective Departments/Divisions*.
- Ensures that operating and maintenance budgets include funding for electrical safety.
- Ensures all employees and contractors throughout their respective Department/Division are in compliance with this *ESP*.
- Support the activities of the *Electrical Safety Steering Committee (ESSC)*.
- Ensures periodic audits are completed for compliance to this *ESP*.
- Ensures all required *ESP* related records are retained.
- Ensures orientations of the *ESP* are provided to all employees and contractors as per *Section 9.0 Electrical Safety & Technical Training*.
- Ensures and supports required *electrical safety training* for employees.
- Ensures that *Electrical Specific Personal Protective Equipment (PPE), Tools, and Equipment* are budgeted for and procured as required.
- Responsible to ensure all *electrical incidents* are reported, investigated and documented. Ensures Managers and Supervisors implement all corrective actions. If changes are required to the *ESP*, ensures that the *Management Of Change (MOC)* process as a component of this ESP is utilized for change implementation.

3.2. Managers/Superintendents

- Note that some of the roles and responsibilities of this section are duplicated with the next category of “Supervisors/Foremen”.
- Ensures all employees within their area of responsibility are in compliance with this *ESP*.
- Ensures that those employees and contractors who are exposed to *energized electrical conductors or circuit parts* are *trained, qualified and authorized* to undertake the *work task*.
- Relative to the authorization of workers to perform electrical work tasks, collaborates

with the appropriate Field Safety Representative (FSR), per the scope of the FSR"s permit.

- Must complete training requirements as per Section 9.0 Electrical Safety & Technical Training (see Appendix U - Training & Qualifications Matrix).
- Ensures *orientation* of the *ESP* to all employees and contractors as per *Section 9.0 Electrical Safety & Technical Training* is completed.
- Ensures staff receive required training and that *ESP* training records are maintained.
- Accountable to ensure *validation of competency* of the workers they supervise by *interviewing, testing, inspecting and observing* (see Appendix R – Electrical Safety Program Orientation Checklist).
- Supports and ensures that workers complete a *Risk Assessment Procedure (RAP)* and that the electrical hazards of *arc flash and shock* are identified, and the risk related to an *energized electrical task* is assessed and documented. These findings shall be documented in the Energized Electrical Job Risk Assessment (EEJRA) form prior to completing the work task.
- Ensures that staff a*nd contractors have* been classified as a *Qualified Electrical Worker Low Voltage, High Voltage or Task Qualified Worker* by having *Appendix R - Electrical Safety Program Orientation Checklist* executed for each worker.
- Conducts *periodic audits* of *risk assessments* and *procedures* used by spot checking or sampling the completed EEJRA forms and periodically reviewing any standard operating procedures used.
- Follows up on identified electrical safety related *near misses* and ensures they are addressed in a timely manner with appropriate corrective actions.
- Relative to the Energized Electrical Work Permit, authorizes workers to perform justified *energized electrical work tasks*.
- Ensures that affected workers have received training on *Electrical Incident Emergency Response* and approved *methods of release* of a *shock* victim.
- Responsible to ensure that all *electrical incidents* including *near misses* are reported. This includes entering incident information into the investigation database and reporting to the COV Electrical Inspections Branch.
- Leads electrical incident investigations that occur in their area of responsibility and ensures that all *appropriate corrective actions* are implemented in a timely manner.
- Supports and ensures that the *Annual Program Audit* is completed, that any corrective actions are followed up on, and that any non-compliances are properly addressed. (Note that the Electrical Safety Program Manager ensures that audits are occurring).

- On an ongoing basis, any non-compliances with respect to ESP requirements shall be reviewed and corrective actions taken.

3.3. Supervisors/Foreman

- Ensures all employees within their area of responsibility are in compliance with this *ESP*.
- Ensures that those employees and contractors who are exposed to *energized electrical conductors or circuit parts* are *trained, qualified and authorized* to undertake the *work task*.
- Relative to the authorization of workers to perform electrical work tasks, collaborates with the appropriate Field Safety Representative (FSR), per the scope of the FSR"s permit.
- Must complete training requirements as per Section 9.0 Electrical Safety & Technical Training (see Appendix U - Training & Qualifications Matrix).
- Ensures *orientation* of the *ESP* to all employees and contractors as per *Section 9.0 Electrical Safety & Technical Training* is completed.
- Accountable to ensure *validation of competency* of the workers they supervise by *interviewing, testing, inspecting and observing* (see Appendix R – Electrical Safety Program Orientation Checklist).
- Supports and ensures that workers complete a *Risk Assessment Procedure (RAP)* and that the electrical hazards of *arc flash and shock* are identified, and the risk related to an *energized electrical task* is assessed and documented. These findings shall be documented in the Energized Electrical Job Risk Assessment (EEJRA) form prior to completing the work task.
- Ensures that staff a*nd contractors have* been classified as a *Qualified Electrical Worker Low Voltage, High Voltage or Task Qualified Worker* by having *Appendix R - Electrical Safety Program Orientation Checklist* executed for each worker.
- Conducts *periodic audits* of *risk assessments* and *procedures* used by spot checking or sampling the completed EEJRA forms and periodically reviewing any standard operating procedures used.
- Relative to the Energized Electrical Work Permit, authorizes workers to perform justified *energized electrical work tasks*.
- Responsible to ensure that all *electrical incidents* including *near misses* are reported. This includes entering incident information into the investigation database and reporting to the COV Electrical Inspections Branch.

3.4. Inspections Branch

- Are classified as Qualified Electrical Workers (QEWs) for the purposes of this Electrical Safety Program.
- Oversee FSR compliance and competence within the COV organization
- Have input into training requirements for COV FSR's and other QEWs (including code reviews, seminars, Safety Authority updates, directives, etc.)
- Administer the BC Safety Standards Act and supporting regulations and requirements for the City of Vancouver.
- Reviewing inspection logs for all electrical work and determine what to inspect and when.
- Perform code compliance inspections.
- Participate in the ESSC as required in an advising and/or membership role.
- Will follow the requirements of the COV ESP as required, and as applicable for their work tasks.
- When inspecting at third party facilities, will meet all applicable site safety requirements in addition to the City of Vancouver's safety requirements (including the requirements of this Electrical Safety Program).
- Reports any observed safety violations or incidents to the appropriate authorities.
- Remain up-to-date on all applicable legislation, regulations, directives, codes, standards, and policies.

3.5. COV Project Managers

- Responsible for managing electrical contractors within their respective Department/Division.
- Follow up to confirm that applicable electrical contractors have established Occupational Health & Safety Management Systems and supporting Electrical Safety Programs in place and practice.
- Confirm that electrical contractors have provided Arc Flash & Shock Training to their employees and have available appropriate Electrical Specific PPE, Tools & Equipment.

- Responsible to ensure that contractors shall coordinate utility locating activities and follow all COV utility locating and ground disturbance policies.
- Shall follow and fulfill the requirements of COV's documented project commissioning process.
- Shall coordinate with other COV electrical stakeholders (eg: FSR's, maintenance groups, REFM and Park Board facilities development groups, Engineering Services, etc.) on project interfaces, coordination, and information transfer. This includes, but is not limited to, notices of projects, permits, tie-ins, utility support, information on new equipment being supplied, schedules, drawings, databooks, etc. This coordination shall be facilitated by means of the *"City of Vancouver Checklist for Electrical Project Work in City of Vancouver Buildings".*

3.6. COV Field Safety Representative (FSR)

The COV Field Safety Representative (FSR) is responsible for ensuring electrical work including construction and maintenance meets the minimum requirements of the CE Code Part I, Municipal Bylaws and specific requirements as identified in the COV Inspections Branch Annual Operating Permit. This includes ensuring that workers assigned to complete the work are qualified, competent, and authorized to complete the assigned work.

The COV FSR has the following identified responsibilities per Technical Safety BC (TSBC):

- Reports safety related items to the COV FSR who is named on the COV Inspections Branch Operating Permit.
- Is responsible for ensuring that all work performed under Permits, on which the COV FSR is named, complies with the requirements under the Safety Standards Act and Regulations.
- In collaboration with the applicable Manager, Superintendent, Supervisor or Foreman, authorizes any worker performing electrical work under this program for COV facilities. These workers may or may not be reporting directly or indirectly to the FSR.
- Must maintain current knowledge of all publications listed under their area of responsibility e.g. CE Code Part I.
- Ensure that any Permit assigned to the FSR is within the scope of their qualifications.
- Ensure compliance with all qualification and supervision requirements under the Regulations.

- Ensure that electrical equipment being connected, under the Permit, is approved.
- Ensure that electrical work performed under the Permit meets all requirements of the Act and Regulations.
- Submit requests for inspections, as required by the authority having jurisdiction.
- Understand and comply with all terms and conditions of the Permit.
- Report any electrical incidents involving electrical equipment or energized electrical work (see TSBC Directive D-E3 070115 1 Incident Reporting Requirements with Respect to Electrical Technology) to the City of Vancouver Inspections Branch.
- Comply with any reasonable request of a City of Vancouver Inspections Branch Safety Officer.

In addition to the prescribed TSBC requirements above, the COV FSR shall ensure that the requirements of this ESP are followed when electrical work is completed on any COV Facilities that they have responsibility for.

3.7. Contractor Field Safety Representative

- Where an electrical contractor is utilized for construction, the contractor's FSR will be required to have an Installation Permit from the COV Inspections Branch.
- Coordinate with the relevant COV FSR.

3.8. Organizational Safety

- Ensures that *City of Vancouver OHS corporate processes* are in place to support adoption, implementation and maintenance of this *ESP*.
- Ensures this *ESP* is harmonized with the *City of Vancouver overall Occupational Health and Safety Management System*.
- Will act as a member of the *ESSC.*
- Responsible to ensure that an *Internal Electrical Safety Audit* is completed annually to measure performance of the *Electrical Safety Program* for compliance. The implementation of this process will be delegated to the *ESP Manager(s)*.
- Ensures a common reporting tool for incident reporting and investigation is implemented across all regions as applicable.

3.9. Engineering Safety (OSSB) Safety Manager

- Supports the implementation and ongoing maintenance of the ESP within their

Department/Division.

3.10. Training Administrator

- All training records will be stored in SAP Training & Events Management System.

3.11. Electrical Engineers (REFM and Engineering)

- Manages or completes the implementation of *Engineering Incident Energy Analysis*.
- Uses the *Arc Flash Incident Energy Analysis Technical Specification* with any required customization to control the scope of work (e.g. use of *2 Second Guideline*, correct *Operating Modes*, *Working Distances* used, report content, *detailed Arc Flash & Shock Equipment Labels* or Results Tables), cost and delivery of *Incident Energy Analysis Studies* to the City of Vancouver. If studies are completed internally will follow the requirements of the *Technical Specification*.
- Ensures that *detailed Arc Flash & Shock Warning or Danger Equipment Labels* used comply with the requirements of *Appendix H Labelling Specification and Schedule for Detailed Arc Flash & Shock Labels & Signs*.
- Ensures that *Arc Flash Risk Assessment* data from *Incident Energy Analysis* or the *Arc Flash PPE Category "Table Method"* is validated and provided for reference by QEWs. This may be in the form of *Equipment Labels or Results Tables* and this data may be included in the *CMMS*.
- Provides recommendations for *Substitution* or *Engineering "Safety by Design"* for new construction or retrofit projects.
- Provides support for QEWs by validating *engineering data*, *incident energy* and *arc flash boundary* calculations.
- Reviews potential mitigation for *incident energy* reduction and make recommendations for implementation.
- Responsible for engineering electrical analysis software and how it is applied. ETAP/SKM/EasyPower latest revision is the City of Vancouver Standard for software for power engineering studies and Incident Energy Analysis.
- For new facilities or additions, supervise the engineering consultant to ensure that they follow the requirements of the *ESP* and the *Technical Specification* in their power system studies and *incident energy analysis* (e.g. target *maximum working incident energy level* of 40 cal/cm^2, target mitigation to achieve lower than 40 cal/cm^2 *incident energy* level). Review and approve any *incident energy* reduction strategies proposed.
- Assist the operations and maintenance department in reviewing *electrical equipment*

maintenance requirements for sustainable safety and reliability.

- Involved in reviewing and approving *Management Of Change* related to the electrical distribution system.
- Ensure that the *ETAP/SKM/EasyPower source files* and *custom library files* are retrieved from engineering consulting firms and backed up.
- Follow up to ensure electrical *Single Line Diagrams* are available, as-built and posted where required as per the *CE Code Rule 36-006*.

3.12. Qualified Electrical Worker (QEW)

- Minimum Journeyman Electrician, Construction and/or Industrial or FSR-A or -B with *demonstrated skills and knowledge* related to the construction, operation and maintenance of electrical equipment and installations at the City of Vancouver.
- See below for additional QEW sub-categories which have alternative qualifications (Low Voltage, High Voltage, and Task Qualified).
- This designation will also apply to electrical contract workers and commissioning and manufacturer's technicians.
- Meets *defined competency requirements* as validated by the Supervisor.
- QEW must ensure they are aware of foreseeable electrical hazards and *appropriate preventive and protective risk control methods* to *mitigate or reduce risk of exposure* to them.
- Must complete *training requirements* as per *Section 9.0 Electrical Safety & Technical Training* (see *Appendix U - Training & Qualifications Matrix*).
- May be indoctrinated as a QEW Low Voltage, High Voltage or Task Qualified Worker by having *Appendix R - Electrical Safety Program Orientation Checklist* completed.
- Understands and implements the requirements of the *City of Vancouver Lockout Program and Training Manual.*
- Ensures that all electrical work is done in a de-energized state where practicable. Must understand when an *Energized Electrical Work Permit (EEWP)* may be required.
- Read, interpret and use electrical *single line diagrams* and other *engineering drawings* as required.
- Understand and apply the information on *detailed Arc Flash & Shock Equipment Labels, Results Tables or Work Orders to determine additional protective measures to reduce risk related to a work task's Shock Risk Assessment or Arc Flash Risk Assessment*.
- Complete and document a *Risk Assessment Procedure (RAP)* for *energized electrical work tasks* including a *work task* specific *Arc Flash and Shock Risk Assessment* with

identified *preventive and protective risk control methods* to reduce risk using the EEJRA form.

- Participates in writing and reviewing *safe operating procedures*.
- Complies with the *safe operating procedures* and processes of this *ESP* when working on *energized electrical conductors or circuit parts*.
- Reports all *electrical incidents* or *near misses, injury or damage to healt*h or no injury, including *shock* (at any voltage) and *arc flash* to their Supervisor.
- Pre-use inspects, wears and uses the appropriate *Electrical Specific PPE, Tools & Equipment* for all *work tasks*.
- Maintains *Electrical Specific PPE, Tools, and Equipment* in proper working condition.
- Escorts AEW, QIW, QOW, and NEW personnel in the *Limited Approach Boundary* for *shock* if required.
- Meets defined competency requirements as validated by the Supervisor.
- Trained in *methods of release* for victims from contact with exposed *energized electrical conductors or circuit parts* as per *ESP Section 11 Emergency Response to Electrical Incidents*.
- Based on City of Vancouver requirements and approved frequencies receives training in *methods of first aid* and applicable *emergency procedures*, e.g. *approved methods of resuscitation*, CPR, and automated external defibrillator (AED) use if they are available.

3.13. Low Voltage (LV) Worker

- Low Voltage Workers are a sub-category of Qualified Electrical Workers.
- Low Voltage Qualified Electrical Workers' can perform work tasks on equipment operating at voltages limited to <750VAC.
- Can be an Electrical Engineer (P.Eng.) or Electrical Engineering Technologist (e.g. AScT) instead of a Journeyman Electrician with suitable experience and knowledge to work safely on energized low voltage (<750V) systems. Scope of work is limited to maintenance and testing *work tasks*.
    - Equipment Manufacturer's testing department.
    - Equipment Manufacturer's technical representative.
    - Third party Maintenance & Testing Contractor.
    - COV Internal Maintenance & Testing work
- Scope of work is <u>limited</u> to CSA Z463 type acceptance and maintenance testing work tasks, isolation of electrical equipment, racking in and out of power circuit breakers and the installation of temporary protective grounds work tasks for Electrical Engineer and

Electrical Engineering Technologist.

3.14. High Voltage (HV) Worker

- High Voltage Workers are a sub-category of Qualified Electrical Workers.
- High Voltage Qualified Electrical Workers' can perform work tasks on equipment operating at voltages >750VAC. QEW.
- Can be an Electrical Engineer (P.Eng.) or Electrical Engineering Technologist (e.g. AScT), with *suitable experience and knowledge* to work safely on energized high voltage (>750VAC) systems.
    - Equipment Manufacturer's testing department.
    - Equipment Manufacturer's technical representative.
    - Third party Maintenance & Testing Contractor.
- COV Internal Maintenance & Testing work. Have appropriate *specialized technical skills training* for High Voltage electrical equipment.
- Scope of work is <u>limited</u> to CSA Z463 type acceptance and maintenance testing work tasks, isolation of electrical equipment, racking in and out of power circuit breakers and the installation of temporary protective grounds work tasks for Electrical Engineer and Electrical Engineering Technologist.
- High Voltage Workers include Utility Arborists with COV approved training and utilizing industry accepted practices per BC Hydro PSSP Categories 2, 3 and 4, as well as Distribution Component Training (DBC), and Transmission Component Training (TXC)
    - Scope of work for Utility Arborists is limited to vegetation management in the vicinity of power lines. Work may be performed under normal or emergency conditions (i.e. after storm events, vehicle impacts, seismic events, etc.).
    - COV Utility Arborists are subject to modified PPE visibility marking requirements (relative to WorkSafeBC requirements). Modifications are to be per the current variance on file with the Parks Board. Limits of approach are per BC OHS Regulation 19.34, Table 19-3. See also sections 19.10 to 19.35).
    - For low voltage work, see BC OHS Regulation 19.10 to 19.15 (this includes applicable limits of approach).

3.15. Task Qualified Worker (TQW)

- Task Qualified Workers are a sub-category of Qualified Electrical Workers
- The Task Qualified Worker is not a Journeyman Electrician, they are a worker that can isolate, operate, and maintain electrical equipment in a specific limited scope of work

application.

- Scope is limited to *energized electrical work tasks* at low voltage ≤750 volts line to ground only. The *training and certification* of the worker may further limit this voltage to a lower level.
- Understands their job scope and limitations, and must be aware of the electrical hazards of *arc flash and shock in addition to other hazards inherent to their scope of work*.
- Typically completes *troubleshooting and diagnostic* related *work tasks* downstream of a local disconnect.
- Ensures that all *electrical repair and alteration work* is done in a de-energized state.
- These Task Qualified Workers require industry specific qualification training.
- The specific qualification training may be in the areas of Air Conditioning & Refrigeration Technician, Overhead Door or Crane Mechanic, Fire Alarm Technician, Cathodic Protection Technician, or Elevator Mechanic with suitable training, experience and knowledge to work safely on low voltage specialized systems.
- Some COV-specific Task Qualified Workers are listed and described below.
    - Theatre Full Entertainment (FE), Theatre Limited Entertainment (LE), or Live Performance Electrical Certification (LPEC) personnel meeting TSBC qualification requirements.
        - Authorized to install temporary power systems pertaining to public events such as trade shows, exhibits, displays, and festivals.
        - Authorized to operate energized electrical equipment in a normal operating condition.
        - COV FE's will not complete energized electrical work tasks - scope is limited to the LE qualification scope of work.
        - If the COV FE has completed specific Arc Flash & Shock training and Electrical Safety Program Roll Out training and applies the requirements of the Electrical Safety Program, they can complete maintenance and testing work tasks as defined by the Class FE FSR Scope of Work issued by the TSBC for production of trade shows, exhibits, displays and festivals.
        - Connection to or extension from cam lock connectors to cam lock connectors is not considered to be energized electrical work. All cam lock connectors are to have automatically closing weatherproof and finger-proof covers when not connected.
        - Where required, the REFM Electrician will perform energized electrical work e.g. testing for absence of voltage, voltage measurements,

troubleshooting, diagnostics, etc.

- Can perform one reset attempt on breakers but only after investigating and correcting the root cause.

- Power Engineers (REFM Mechanical Technicians and Park Board Mechanical Technicians)
  - Power Engineers' work tasks are limited to their certificate of qualification defined in Safety Standards Act "POWER ENGINEERS, BOILER, PRESSURE VESSEL AND REFRIGERATION SAFETY REGULATION".
  - Tasks include limited electrical work including troubleshooting, diagnostics, and repair of equipment related to boilers. Definition of "boiler" means a vessel in which, by the application of heat, gas, steam or vapour is capable of being generated and pressurized, or, a liquid is capable of being pressurized or heated and includes fittings and boiler external piping associated with the vessel. A "boiler system" means a power plant, heating plant, low temperature, low pressure fluid plant, low pressure thermal fluid plant, high pressure thermal fluid plant, or pressure plant; These systems include boilers (high pressure thermal fluid plant), refrigeration systems (high pressure thermal fluid plant, or pressure plant), swimming pools (low temperature, low pressure fluid plant), and HVAC equipment (pressure plant). Tasks include any of the following with respect to electrical equipment that is part of a plant:

    (a) connect branch circuit wiring to the boiler equipment integral connection box from a junction box or disconnect mounted in close proximity to the boiler equipment;

    (b) perform work on class 2 circuit wiring up to a rated output of 100 Volt amps;

    (c) perform work on low voltage controls or 24 volt thermostats;

    (d) perform work on three phase motors or controllers integral to the boiler equipment.

- Solar Power servicing (involving energized electrical work tasks) will be performed by the COV's QEWs or manufacturer's representatives.
  - Relevant training will be provided by the COV for working on these systems.
- Electric Vehicle (EV) charging station maintenance and replacement is performed by the COV's QEWs or the installer's representative.
  - Relevant training will be provided by the COV for working on these systems.

- Engineering Services, SCADA Technician

  - May be an electrical or electronics technologist, instrumentation technician, electrical engineer, or have other relevant certifications and training.
  - Scope of work is limited to programming and troubleshooting of Programmable Logic Controllers (PLCs), Remote Terminal Units (RTUs), Human Machine Interface (HMI) panels, industrial radios, industrial data switches, routers, firewalls, and various field instruments. Setup and configuration of SCADA servers and workstations for both operators and engineering services.
  - Cannot enter equipment with voltages above 120 VAC or 125 VDC.
- Parking Metering Maintenance Technician:
  - Require minimum Grade 12 Diploma and on the job training on parking meters.
  - Scope of work is limited to less than 30V.
  - Cannot work on 120VAC conductors or circuit parts related to the parking metering equipment.
  - Do not require arc flash & shock training.
  - The COV will provide on the job technical skills training on relevant parking metering equipment.
  - Shall follow any manufacturer or COV specific work procedures.

3.16. Qualified Instrumentation Worker (QIW)

- Minimum Journeyman Instrumentation Technician/Mechanic, with *suitable experience and knowledge*.
- Performs work on control systems and related equipment with an operating voltage not greater than 120VAC or 125VDC.
- Must ensure they are aware of foreseeable electrical hazards and *appropriate preventive and protective risk control methods* to *mitigate or reduce risk of exposure* to them.
- Must complete *training requirements* as per *Section 9.0 Electrical Safety & Technical Training* (see *Appendix U - Training & Qualifications Matrix*).
- Understand and apply the information on *detailed Arc Flash & Shock Equipment Labels, Results Tables or Work Orders to determine additional protective measures to reduce risk related to a work task's Shock Risk Assessment or Arc Flash Risk Assessment*.
- Complete and document a *Risk Assessment Procedure (RAP)* for *energized electrical work tasks* including a *work task* specific *Arc Flash and Shock Risk Assessment* with identified *preventive and protective risk control methods* to reduce risk using the EEJRA form.

- Pre-use inspects, wears and uses the appropriate *Electrical Specific PPE, Tools & Equipment* for all *work tasks*.
- Maintains *Electrical Specific PPE, Tools, and Equipment* in proper working condition.
- Ensures where practical that all electrical work is done in a de-energized state.
- Understands and implements the requirements of the *City of Vancouver Lockout Program and Training Manual.*
- Participates in writing and reviewing *safe operating procedures*.
- Complies with the *safe operating procedures* and processes of this *ESP* when working on *energized electrical conductors or circuit parts*.
- Meets defined competency requirements as validated by the Supervisor.
- Reports all *electrical incidents or near misses, injury or damage to health or no injury*, including *shock* (at any voltage) and *arc flash* to their Supervisor and HSE.
- Trained in *methods of release* of victims from contact with exposed *energized electrical conductors or circuit parts*.
- Based on City of Vancouver requirements and approved frequencies receives training in *methods of first aid* and applicable *emergency procedures*, e.g. *approved methods of resuscitation*, CPR, and automated external defibrillator (AED) use if they are available.
- Proper use of portable cord-and-plug connected electrical equipment and extension cords.
- Proper use and operation (e.g. Pre-use Test and Reset) of *Ground Fault Circuit Interrupters (GFCIs)*.

3.17. Associate Electrical Worker (AEW)

- Employee or contract Apprentice Electricians and other workers (e.g. engineers in training, electrical engineering technologists, or other trades) requiring direct supervision of a QEW.
- Understands their *job scope and limitations* and must be aware of the electrical hazards of *arc flash and shock*.
- Must complete training as per *Section 9.0 Electrical Safety & Technical Training* (see *Appendix U - Training & Qualifications Matrix*).
- Complete and document a *Risk Assessment Procedure (RAP)* for *energized electrical work tasks* including a *work task* specific A*rc Flash and Shock Risk Assessment* with identified *preventive and protective risk control methods* to reduce risk using the EEJRA form.

- Understand and apply the information provided in *detailed Arc Flash and Shock Warning Equipment Labels, Results Tables or with Work Orders* when completing an *Arc Flash Risk Assessment and Shock Risk Assessment*.
- Pre-use inspects, wears and uses the appropriate *Electrical Specific PPE, Tools & Equipment* for the task.
- Maintains *Electrical Specific PPE, Tools & Equipment* in proper working condition.
- Does not encroach on the *Limited Approach Boundary* and the *Arc Flash Boundary* unless they have the correct training and PPE as per *Section 8.0 Electrical Specific PPE, Tools & Equipment* and *Section 9.0 Electrical Safety & Technical Training* of this *ESP* (reference *Appendix U - Training & Qualifications Matrix*).
- An Apprentice Electrician or QEW in training may reset circuit breakers, replace fuses, and reset electrical protective relays after an over-current trip, only after reviewing and correcting the root cause of the trip, and provided they are *adequately trained, validated as competent* and with *approval and direct supervision* from a QEW.
- An Apprentice Electrician or QEW in training is allowed to reset an overload condition on electrical equipment after reviewing and correcting the process root cause, whether the overload reset button is located on the inside or the outside of the electrical equipment, provided they are *adequately trained, validated as competent*, and with *approval and direct supervision* by a QEW.
- An Apprentice Electrician or QEW in training, provided they are *adequately trained* and fully understand the requirements of this *ESP* with validated competency, may do *energized electrical work* for certain tasks such as troubleshooting at voltage levels 750 VAC or less with *approval and direct supervision* by a QEW.
- An Apprentice Electrician, provided they are *adequately trained and validated as competent*, may do *power circuit breaker rack-in/rack-out with direct supervision* by a QEW.
- Apprentices or trainees in other trades shall complete approved *work tasks* with *direct supervision* of a QEW TQW.
- Reports all *electrical incidents* or *near misses*, injury or damage to health or no injury, including *shock* (at any voltage) and *arc flash* to their Supervisor and HSE.
- Trained in *methods of release* of victims from contact with exposed *energized electrical conductors or circuit parts*.
- Based on *company requirements and approved frequencies* receives *training in methods of first aid and emergency procedures*, e.g. *approved methods of resuscitation*, CPR, automated external defibrillator (AED) use if they are available.

- Proper use of *portable cord-and-plug-connected electrical equipment and extension cords*.
- Proper use and operation (e.g. Pre-use Test and Reset) of *Ground Fault Circuit Interrupters (GFCIs)*.

Note: *Direct supervision is defined: a competent worker is personally and visually supervising the worker, visitor or other employee, and that the competent worker is able to communicate readily and clearly with the worker, visitor or other employee in the restricted area.*

3.18. Qualified Operations Worker (QOW)

- The COV owns, operates and maintenance a variety of facilities. Those facilities are operated by authorized, and qualified workers.
- A QOW is a worker that has specific technical skills training for operating a process and is responsible for and authorized to operate the process for insurance and compliance purposes.
- The operation and maintenance of the electrical equipment and control systems related to the COV facilities can be completed by applicable Qualified Operations Workers (QOW).
- The COV QOW must understand their job scope and must be aware of the electrical hazards of *arc flash and shock* if they apply.
- The following COV QOW roles have scope of work limitations as noted:

  - **REFM & Park Board, Utility Maintenance Worker:**
    - Supports swimming pools & ice rinks.
    - Are provided with COV on the job training.
    - Can only operate electrical equipment e.g. turn on or off under normal operating conditions
    - Are not authorized to diagnose or troubleshoot electrical equipment faults.
  - **Engineering Services, Sewer Pump Mechanics:**
    - Have minimum COV training for Pump Station Mechanics.
    - Can operate electrical equipment, e.g. turn it on and off under normal operating conditions.
    - Can reset a motor overload once only after completing a root cause failure analysis and correcting the problem. Only permitted if the overload reset pushbutton for the motor starter is on the outside of the electrical equipment.

        - Can reset a circuit breaker once only (up to 600VAC and 100A) that may have tripped on an overcurrent or overload condition, and only after completing a root cause failure analysis and correcting the problem.
        - Cannot reset variable speed drive faults.
        - Shall follow applicable procedures as required.
    - **Engineering Services, Water Works, Dedicated Fire Protection System (DFPS) Operator**
        - Can operate electrical equipment, e.g. turn it on and off under normal operating conditions.
        - Can reset a motor overload once only after completing a root cause failure analysis and correcting the problem. Only permitted if the overload reset pushbutton for the motor starter is on the outside of the electrical equipment.
        - Can reset a circuit breaker once only (up to 600VAC and 100A) that may have tripped on an overcurrent or overload condition, and only after completing a root cause failure analysis and correcting the problem.
        - Shall follow applicable procedures as required.
        - Cannot reset variable speed drive faults.
- Must have training as per *Section 8.0 Electrical Specific PPE, Tools & Equipment* and *Section 9.0 Electrical Safety & Technical Training* of this *ESP* (see *Appendix U - Training & Qualifications Matrix*) depending on their specific role.
- Is aware that information that is provided on *detailed Arc Flash and Shock Warning Equipment Labels, Results Tables or with Work Orders* related is for to the completion of an *Arc Flash Risk Assessment and Shock Risk Assessment* by a QEW or QIW.
- Operates (e.g. turn on or off) low voltage branch circuit electrical equipment under *normal operating conditions*.
- Can open or close low voltage <750VAC branch circuit, circuit breakers or disconnect switches and contactors for isolation purposes (lockout/tag) only or as permitted in the above worker role descriptions.
- Does not open or close *power distribution circuit breakers* above 750VAC.
- Does not open hinged doors or remove covers on *energized electrical equipment*.
- Does not encroach on the Limited Approach Boundary and the Arc Flash Boundary unless they have QEW supervision, appropriate PPE, and proper authorization.
- Does not *work on exposed energized electrical conductors or circuit parts* above 30V.
- Must report all *electrical protective relay trips* to Electrical Maintenance. Is not authorized to reset protective relays on electrical equipment.

- Reports all *abnormal conditions* on *energized electrical equipment* immediately to a QEW. This includes covers or doors left open on electrical equipment, environmental contamination, excess heating, smoke or fire, unusual sounds, alarm conditions, physical damage, tripping of breakers or opening of fuses.
- Reports all *electrical incidents or near misses*, *injury or damage to health or no injury*, including *shock* (at any voltage) and *arc flash* to their Supervisor and HSE.
- Is not authorized to implement *emergency release of a shock victim* from contact with exposed *energized electrical conductors or circuit parts* unless adequately trained.
- Based on company requirements and approved frequencies receives *training in methods of first aid* and *emergency procedures*, e.g. *approved methods of resuscitation*, CPR, and automated external defibrillators (AED) use if they are available.
- Proper use of *portable cord-and-plug-connected electrical equipment and extension cords*.
- Proper use and operation (e.g. Pre-use Test and Reset) of GFCIs, fixed mounted or portable cord type.

3.19. Non-Electrical Worker (NEW)

- Does not meet the requirements of QEW, TQW, QIW, AEW, or QOW.
- Includes an Irrigation Worker that installs extra low voltage electrical equipment equal to or less than 30V irrigation equipment. Is not authorized to work on 120VAC electrical equipment.
- Reports all *electrical incidents or near misses, injury or damage to health or no injury*, including *shock* (at any voltage) and *arc flash* to their Supervisor and HSE.
- No resetting of breakers.
- Must notify a QEW or the Electrical Department if there are *abnormal conditions* on *energized electrical equipment*. This includes covers or doors left open on electrical equipment, environmental contamination, excess heating, smoke or fire, unusual sounds, alarm conditions, physical damage, tripping of breakers or opening of fuses.
- Depending on their role may receive *electrical safety awareness training* as outlined in *Section 9.0 Electrical Safety & Technical Training* (see *Appendix U - Training & Qualifications Matrix*).
- The COV as required by ESP Section 5.0 Safety Installations will provide approved portable cord-and-plug-connect electrical equipment, cord sets and GFCIs for use.
- The requirements of this ESP pertaining to *Portable Cord-And-Plug-Connected*

Electrical Equipment and Cord Sets (Extension Cord) Condition shall be followed. COV shall provide communication and training on these requirements.

- Proper use of *portable cord-and-plug-connected electrical equipment or appliances and extension cords*.
- Proper use and operation (e.g. Pre-use Test and Reset) of GFCIs, fixed mounted or portable cord type.

3.20. Electrical Standby Person/Safety Watch (ESW)

- As a priority will be a QEW.
- Can be an AEW or QIW.
- ESW's must be trained on pre-use checks and use of the PPE and any applicable rescue equipment, regardless of worker category.
- QEWs and Supervisors will determine when ESW's are required. COV shall determine further guidance in the future.
- Understands their *job scope and limitations* as the ESW.
- Keeps Non-Electrical Workers out of the work area.
- Wears the same *arc flash and shock PPE* as the QEW performing the *work task*.
- Can optionally use a *Rescue Hot Stick*.
- Summons qualified help via radio, telephone, etc.
- Has available an *appropriate fire extinguisher* (minimum Class C, will usually be Class A, B, C).
- Has available a flashlight and has checked any available emergency lighting to ensure it is functional.
- Specifically advised of *emergency electrical equipment isolation location* and requirements to operate.
- Reports all *electrical incidents* to their Supervisor involving injury or damage to health, or no injury. This includes *shocks* (at any voltage) and *arc flashes*.
- Based on company requirements and approved frequencies receives training in *methods of first aid* and *emergency procedures*, e.g. *approved methods of resuscitation*, CPR, and automated external defibrillators (AED) use if they are available.
- Trained on requirements of the *Emergency Response Program* and approved *methods of release* of victims from contact with exposed *energized electrical conductors or circuit parts* (e.g. use of *Rescue Hot Stick or other hot stick*).

4.0 RELEVANT ACTS, CODES, REGULATIONS AND STANDARDS

In all cases the most current and latest editions of *Provincial Acts, Standards, Regulations, Legislation*, and *Codes* and other supporting *Industry Standards* shall apply.

4.1. Corporate Standards

This *ESP* does not exempt or pre-empt the use and adherence to existing and future Safety *policies* of City of Vancouver. All *safety policies* and *standards* shall be followed when performing electrical work in the applicable City of Vancouver Department/Division. Organizational Safety will make available all Safety *policies and standards* for employee and contractor reference.

4.2. Jurisdictional Acts, Codes, Regulations & Standards

- *All Provincial and Municipal laws, regulations, codes, by-laws, ordinances or otherwise that are applicable to the jurisdiction in which the work is conducted.*
- *Provincial Occupational Health and Safety Acts, Standards, Regulations, Legislation and Codes.*
- *CAN/CSA-C22.1 Canadian Electrical Code (CE Code) Part I*
- *CAN/CSA-Z460 Control of hazardous energy – Lockout and other methods*
- *CSA Z462 Workplace electrical safety Standard*
- *CSA Z463 Maintenance of electrical systems Standard*
- *CAN/CSA-Z1000 Occupational health and safety management*
- *CSA Z1002 Occupational health and safety – Hazard identification and elimination and risk assessment and control*
- *CAN/CSA-Z195 Protective Footwear*
- *CAN/CSA-Z94.3 Eye and Face Hearing Protection Devices*
- *CAN/CSA-Z94.1 Industrial Protective Headwear – Performance, Selection, Care and Use*
- *CAN/CSA-Z94.2 Hearing Protection Devices*
- *CAN/CSA-Z11 Portable Ladders*

4.3. International Standards

- *American Society for Testing & Materials (ASTM) Standards*
- *Institute of Electrical and Electronics Engineers (IEEE) 1584 Guide for Performing Arc*

Flash Hazard Calculations

Note: *Refer to CSA Z462 for other specifically referenced CSA, AIHA, ANSI, ASC, ASTM, EUSA, Health Canada, ICRP, IEC, IEEE, ILO, ISO, NEMA, NETA, NFPA, OHSAS, ULC and Other publications.*

5.0 SAFE ELECTRICAL INSTALLATIONS

5.1. General

It is required that the electrical installations meet the requirements of the applicable *Codes* adopted by the *jurisdiction having authority*, specifically the *C22.1, CE Code Part I* for Canada and any specific jurisdictional amendments.

The City of Vancouver is required to have Annual Operating Permits in place from the City of Vancouver Inspection Branch, and work log books are to be maintained. Contractors completing construction work for the City of Vancouver are required to have Installation Permits in place from the City of Vancouver Inspections Branch.

As a requirement of Technical Safety BC an owner of electrical equipment shall have a registered Field Safety Representative (FSR) of the proper Class as the holder of the Annual Operating Permit. The FSR under Provincial Legislation must fulfill legal requirements related to their FSR status for compliance related to the Annual Operating Permit. Refer to the section on FSR's in the Roles and Responsibilities section.

There is also an obligation to ensure that components supplied for use in the installation are safe, and to warn the user should any hazardous defect be discovered in any of them. When specifying the equipment for the installation, ensure that it is suitable for the intended purpose and relevant *Standards* are used. It is required that only electrical equipment approved by a *certification body* recognized by the *jurisdiction having authority* (e.g. *CSA Approved, ULc listed, ETLc listed*, or equivalent) be procured and installed at all City of Vancouver facilities.

When about to perform electrical work, the expectation of this *ESP* is that the electrical installations are safe, electrical equipment is approved, listed or certified and installed to the applicable installation code(s), Installation and Annual Operating Permit requirements are met, inspections have been conducted, and all maintenance work and corrected deficiencies are logged. The *energized electrical equipment* is considered to be operating normally.

5.1.1. Labeling

When installed, all electrical equipment will include all minimum labeling as supplied by the equipment manufacturer and must comply with the minimum requirements of CSA *C22.1, CE Code Part I for Canada*. Specifically, the *CE Code Part I Rule 2-306* requires a minimum *Arc Flash & Shock Warning Equipment Label* be applied to specific equipment. An example of this

minimum label is provided in *Appendix H – Labeling Specification & Schedule for Detailed Arc Flash & Shock Equipment Labels and Signs*.

With respect to the provision of detailed *arc flash and shock hazard* data that can be applied against an assigned *energized electrical work task* this information can be provided with detailed *Results Tables* or included with a *Work Order* for industrial supervised facilities. If the *arc flash* and *shock* data is not available, the *Arc Flash PPE Category method* must be used to determine *additional protective measures* to reduce risk. The outside of doors on electrical rooms should be consistently labelled with appropriate signage.

5.1.2. Portable Cord-and-Plug-Connected Electrical Equipment & Cord Set (Extension Cord) Condition

Prior to using any cord-and-plug-connected electrical equipment, or cord sets (extension cords), they shall be visually inspected by the employee or contractor for damage such as cracked insulation, broken plug (e.g. ground prong of the plug has been removed), signs of burns, etc. All damaged cords shall be tagged as "**Damaged – Do Not Use**" and will be provided to the Supervisor. If cord is damaged beyond repair, remove from service and dispose of. For a more detailed list of requirements see *Section 7.0 Electrical Safe Work Policies & Practices* of this *ESP*.

5.1.3. Ground Fault Circuit Interrupters (GFCI)

When using portable electrical equipment in a wet or damp indoor or outdoor location, this equipment must be supplied from a Class A GFCI receptacle or lighting panel breaker, unless another acceptable (to the Authority Having Jurisdiction) means of protection is provided.

GFCIs are reliable devices that limit fault current and prevent electrocutions. The range of current permitted in a GFCI protected circuit is much below that necessary for an electrocution to occur (e.g. 6mA for Class A). GFCIs are required for all temporary installations regardless of voltage or current. These devices shall be used in every instance where employees or contractors are using cord-and-plug-connected electrical equipment that is supplied by a 120 volt, single-phase, 15-, 20- or 30- ampere circuit.

All GFCIs shall be inspected and tested (e.g. hit the Test button to confirm the GFCI operates and then hit the Reset button) before each use.

If GFCI protected circuits are experiencing excessive nuisance tripping, then an assured grounding program (in compliance with WorkSafeBC requirements) can be utilized.

6.0 ELECTRICAL RISK ASSESSMENT PROCEDURE AND RISK CONTROL

City of Vancouver Jobs that are assigned to QEWs related to electrical equipment, including electrical branch circuit equipment, control systems, UPS Systems and UPS batteries that require the QEW or QIW to execute *energized electrical work tasks* shall follow a specific "*City of Vancouver Application of the Electrical Safety Program in the Work Flow Process*" that will outline administrative and electrical safe work practice requirements as outlined in this ESP. The *Work Flow Process* requires:

1. That jobs are assigned based on planned or reactive job requests.
2. That the QEW or QIW identifies and documents that they will be exposed to *shock* and/or *shock hazards* related to discrete *work task(s)* completed.
3. That a Risk Assessment Procedure has been completed using the Risk Register Table for all energized electrical work tasks to determine the Residual Risk Level with the application of the Hierarchy of Risk Control Methods. Results are summarized for workers' use in Table 2. Further development of this Risk Assessment Procedure by COV is still required, including the review of some specific COV work tasks; but for interim measures the Danatec generic risk register table has been utilized for the COV ESP.
4. That an Energized Electrical Work Permit (EEWP) is executed when required for specific applicable energized electrical work tasks.
5. That the *City of Vancouver Field Level Hazard Assessment (FLHA)* or equivalent will be completed at the work location, where utilized.
6. That a Job Safety Plan and Job Briefing be completed for the job at the location in the facility where the energized electrical work task(s) will be performed using the Energized Electrical Job Risk Assessment (EEJRA) form.
7. That the ESP's *Energized Electrical Job Risk Assessment (EEJRA)* form is executed by a QEW or QIW at the location in the facility where the *energized electrical work task(s)* will be performed to document that an *Arc Flash Risk Assessment and Shock Risk Assessment* has been completed.
8. That an Electrical Work Zone will be established for the energized electrical work task(s).

9. That all required risk control methods and specifically *Electrical Specific PPE, Tools & Equipment* will be pre-use inspected, and donned before executing an *energized electrical work task(s)*. An *electrical safe operating procedure* may be used if required.
10. Post job analysis completed. QEW to advise Supervisor if any changes are required to Single Line Diagrams, Electrical Standard Work Procedures, or any issues with PPE, tools & equipment, etc.

Please refer to the City of Vancouver Application of the ESP in the Work Flow Process Flow chart below or in the following link.

Application of Electrical Safety Program (ESP) in the Work Flow Process Flow Chart

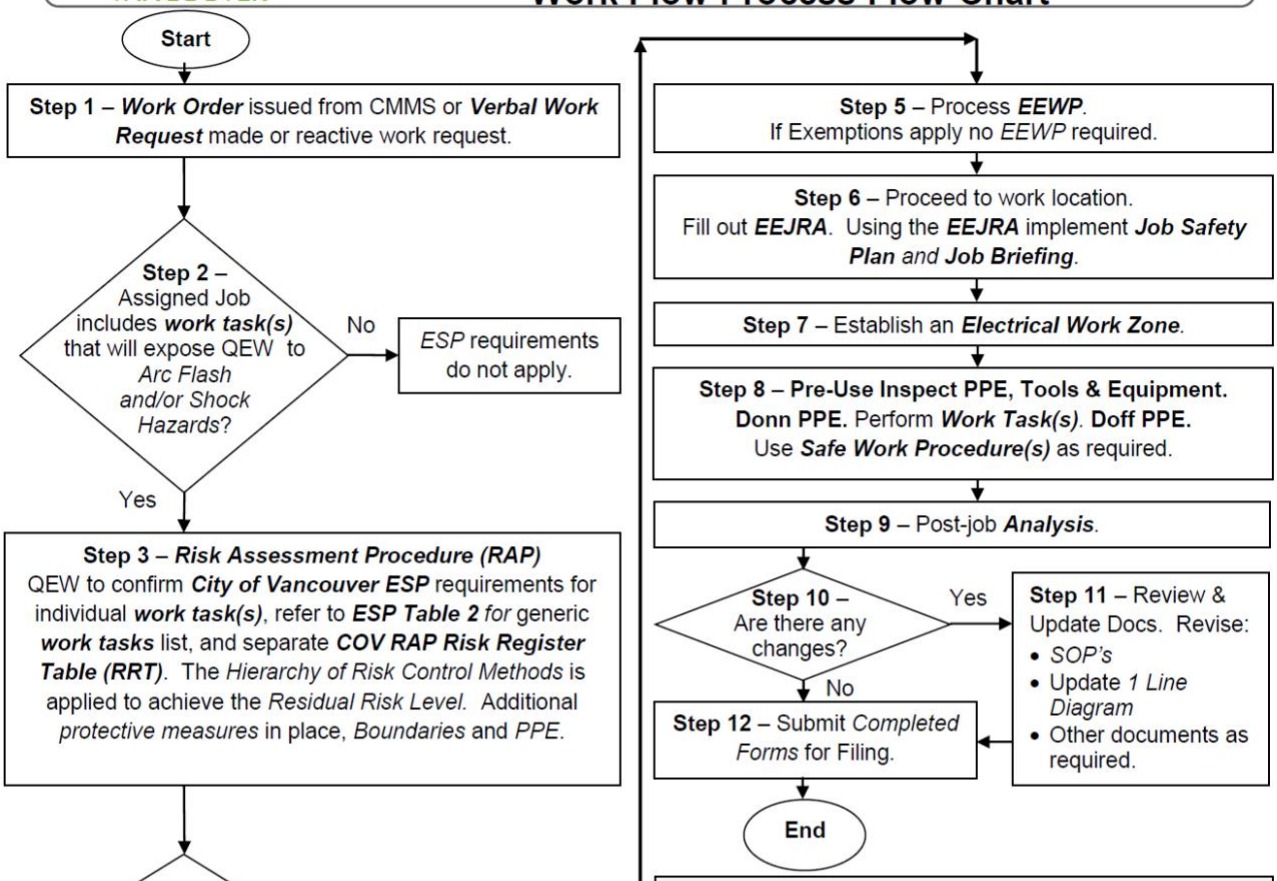

Energized Work Task *justified* Due to:

Greater Hazard: Additional hazards or increased risk.

Infeasibility: Due to equipment design or operational limitations.

Less than 30V: No *EEWP* required.

Exemption for EEWP: Testing, trouble-shooting, voltage measuring, current measuring, thermography, ultrasonic inspection, access and egress to an area with *energized electrical equipment* if no electrical work performed and general housekeeping and misc. non-electrical tasks if the *Restricted Approach Boundary* is not crossed.

LEGEND

CMMS	Computerized Maintenance Management System		
EEJRA	Energized Electrical Job Risk Assessment Form (See *ESP Appendix*)	**EEWP**	Energized Electrical Work Permit
QEW	Qualified Electrical Worker	**RAP**	Risk Assessment Procedure
RRT	Risk Register Table		
SOP	Safe Operating Procedure		

Note: *Refer to* ***City Of Vancouver's Electrical Safety Program***.
Specifically ***Section 6*** and the *ESP Appendix E Risk Assessment Procedure & Electrical Hazard Risk Assessment Matrix*

As outlined in the CSA Z462 Workplace electrical safety Standard a Risk Assessment Procedure is required to be completed for energized electrical work tasks.

City of Vancouver's ESP Risk Assessment Procedure (RAP) process has been applied to work tasks where a QEW will be exposed to arc flash and shock hazards. A generic list of work tasks derived from CSA Z462 Table 2 Estimate of the Likelihood of Occurrence of an arc flash incident for ac and dc systems is the basis for the list of energized electrical work tasks evaluated using the ESP RAP Energized Electrical Work Tasks Risk Register Table Excel spreadsheet. The individual work task's Residual Risk Level estimation has been documented in the Energized Electrical Work Task's Risk Register Table.

Energized Electrical Work Tasks Risk Register Table

Rev v2.3 Date: 17-Jan-19

									Inherent Risk Level (calculated assuming no Electrical Specific PPE, Tools & Equipment and Status Quo for Likelihood of Occurrence)							Residual Risk Level (calculated with the application of Hierarchy of Control Methods)							
										Likelihood of Occurrence Parameters								Likelihood of Occurrence Parameters						
Work Task #	Work Task Description	Energized Electrical Work Permit (EEWP) Required?	Energized Electrical Risk Assessment (EERA) Required?	Equipment Condition Assumptions (Refer to the Assumptions & Notes tab for additional assumptions)	Likelihood of Occurrence (Yes or No) of an Arc Flash incident	Arc Flash, Arc Blast or Shock?	Arc Flash PPE Required (as per NFPA 70E Standard) or Shock PPE Tools & Equipment	Can Qualified Operations Worker (QOW) Perform Task?	Consequence (Severity of Potential Injury or Damage to Health) (Se)	Frequency of Exposure (Fr)	Probability of Hazard Occurrence (Pr)	Possibility of Avoidance (Av)	Risk Class (Rc)	Inherent Risk Level (Ri)	Additional Controls	Consequence (Severity of Potential Injury or Damage to Health) (Se)	Frequency of Exposure (Fr)	Probability of Hazard Occurrence (Pr)	Possibility of Avoidance (Av)	Risk Class (Rc)	Residual Risk Level (Rr)	Notes
NOTE: **Assumptions** for this **Risk Assessment** are to be documented in the ***Assumptions & Notes*** tab. These **assumptions** must be **reviewed and verified** for the identified **Risk Levels (Inherent and Residual)** to be valid.																						
1	Reading a ***panel meter*** while operating a ***meter switch*** (includes digital meters)	No	No	Any	No	N/A	ESP Level 0	Yes														
						N/A	ESP Level 0															
						N/A	ESP Level 0															
2	Performing ***infrared thermography*** and other non-contact inspections outside the *Restricted Approach Boundary*. This activity does not include opening of doors or covers.	No	No	Any	No	N/A	ESP Level 0															
						N/A	ESP Level 0	No														
						N/A	ESP Level 0															
3	Working on ***control circuits*** with exposed energized electrical conductors and circuit parts, nominal **125 Volts ac or dc, or below** without any other exposed energized electrical equipment over nominal **125 Volts ac or dc**, including opening of hinged covers to gain access	No	No	Any	No	N/A	ESP Level 0															
						N/A	ESP Level 0	No														
						N/A	ESP Level 0															
4	***Visual examination of insulated cable*** with **NO** manipulation of cable	No	No	Any	No	N/A	ESP Level 0															
						N/A	ESP Level 0	No														
						N/A	ESP Level 0															
5	For **dc** systems, ***insertion or removal of individual battery*** of a battery system ***in an open rack*** (e.g. lifting the battery off or onto the open rack, physically removing the battery after conductors are removed)	No	No	Any	No	N/A	ESP Level 0															
						N/A	ESP Level 0	No														
						N/A	ESP Level 0															
6	For **dc** systems, ***maintenance*** on (e.g. voltage measurement) a ***single battery*** in an ***open rack***	No	No	Any	No	N/A	ESP Level 0															
						N/A	ESP Level 0	No														
						N/A	ESP Level 0															
7A	For ***ac*** systems, *work on energized electrical conductors and circuit parts* including ***voltage testing or current measurement, 120/240VAC*** single phase.	No	Yes	Any	Yes	No	ESP Level 0		0	0	0	0	0	0		0	0	0	0	0	0	
						No	ESP Level 0	No	0	0	0	0	0	0		0	0	0	0	0	0	
						Yes	ESP Level 0		8	5	1	3	17	H		0	5	1	3	9	L	
7B	For ***ac*** systems, *work on energized electrical conductors and circuit parts* including ***voltage testing or current measurement, 120/208VAC*** three phase.	No	Yes	Any	Yes	Yes	Based on AFRA and SRA		8	5	1	3	17	H		3	5	1	3	12	M	
						Yes	Based on AFRA and SRA	No	3	5	1	3	12	M		3	5	1	3	12	M	
						Yes	Based on AFRA and SRA		8	5	1	3	17	H		0	5	1	3	9	L	
7C	For ***ac*** systems, *work on energized electrical conductors and circuit parts* including ***voltage testing or current measurement, 480VAC or 600VAC*** *three phase*.	No	Yes	Any	Yes	Yes	Based on AFRA and SRA		8	5	1	3	17	H		3	5	1	3	12	M	
						Yes	Based on AFRA and SRA	No	3	5	1	3	12	M		3	5	1	3	12	M	
						Yes	Based on AFRA and SRA		8	5	1	3	17	H		0	5	1	3	9	L	
7D	For ***ac*** systems, *work on energized electrical conductors and circuit parts* including ***voltage testing, >750VAC***.	No	Yes	Any	Yes	Yes	Based on AFRA and SRA		8	3	1	3	15	H		3	3	1	3	10	L	
						Yes	Based on AFRA and SRA	No	3	3	1	3	10	M		3	3	1	3	10	L	
						Yes	Based on AFRA and SRA		8	3	1	3	15	H		0	3	1	3	7	L	
8	For **dc** systems, *working on* (e.g. ***voltage measurement or repair/alteration***) *energized electrical conductors and circuit parts of* ***series-connected batteries in a string***. (this task performed in contained battery array at charge output, 125VDC)	No or Yes if repair or alteration	Yes	Any	No	No	ESP Level 0		0	0	0	0	0	L		0	0	0	0	0	L	
						No	ESP Level 0	No	0	0	0	0	0	L		0	0	0	0	0	L	
						No	ESP Level 0		0	0	0	0	0	L	Battery repair or alteration completed with ASTM F1505 insulated hand tools.	0	0	0	0	0	L	
9A	*Removal or installation of* ***CBs*** or ***switches 120/240VAC*** single phase.	Yes	Yes	Any	Yes	Yes	Based on AFRA and SRA		0	0	0	0	0	0		0	0	0	0	0	0	
						Yes	Based on AFRA and SRA	No	0	0	0	0	0	0		0	0	0	0	0	0	
						Yes	Based on AFRA and SRA		8	4	1	3	16	H		0	4	1	3	8	L	
9B	*Removal or installation of* ***CBs*** or ***switches 208VAC, 480VAC or 600VAC*** three phase.	Yes	Yes	Any	Yes	Yes	Based on AFRA and SRA		8	3	1	3	15	H		3	3	1	3	10	L	
						Yes	Based on AFRA and SRA	No	3	3	1	3	10	L		3	3	1	3	10	L	
						Yes	Based on AFRA and SRA		8	3	1	3	15	H		0	3	1	3	7	L	

As outlined below a detailed explanation is provided of the related electrical safe operating practice requirements identified in the *Work Flow Process flow chart*. A *City of Vancouver Electrical Safe Operating Procedure* may be required to be used when executing *energized electrical work*.

6.1. Risk Assessment Procedure (RAP)

When executing *energized electrical work tasks,* a *Risk Assessment Procedure* is the process where the QEW:

1. Identifies electrical hazards related to a *work task(s)* that may cause *injury or damage to health*;
2. Analyze or evaluate the risk associated with the *work task(s)* and hazard(s); and
3. Determine appropriate *preventive and protective risk control methods* to eliminate or control the risk of ex*posure to the hazard(s)*.

This City of Vancouver *ESP* provides policies, practices a*nd electrical risk assessment* methods to apply in completing *hazard identification and risk assessment* related to justified *energized electrical work tasks*. The intent is to mitigate exposure completely or reduce the risk of exposure of injury or damage to health to a*s low as reasonably practicable (ALARP)*.

The principles and requirements of the *City of Vancouver's Risk Assessment Process* provide overriding guidance on implementing the *Risk Assessment Procedure* outlined above.

In the City of Vancouver Electrical Safety Program Appendix E Risk Assessment Procedure and Electrical Hazard Risk Assessment Matrix the implementation of a generic Risk Assessment Procedure using a “Risk Register Table” is provided. The City of Vancouver ESP Energized Electrical Work Task’s Risk Register Table is used to complete and document an initial or inherent risk level estimation with a baseline assumption of no Electrical Specific PPE, Tools & Equipment used and without additional protective risk control methods applied as a baseline scenario. If the initial risk level estimation is not acceptable then arc flash and shock risk assessments are completed for the specific work task(s) in order to identify additional protective measures to reduce injury or damage to health.

Separately a review of the *Hierarchy of Risk Control Methods* is completed and applied to the *Likelihood of Occurrence* parameters to reduce risk. The individual *work task’s residual risk level* should be reduced with the application of the *preventive and protective risk control methods*.

Using the *City of Vancouver RAP* process the *initial risk estimation* or r*esidual risk estimation* may be low, medium or high with the following actions required, see Table 1 below:

Table 1 – Initial or Residual Risk Estimation required actions

Initial or Residual Risk Estimation	Required Actions
Low	No risk control methods or no additional risk control methods are required. Monitor and maintain risk control methods in place. Manage by routine. Little or no impact.
Medium	Caution is required. Incorporates some level of risk that is unlikely to occur. Apply all *preventive and protective risk control methods*. Take remedial action at appropriate time.
High	*Work task* is not allowed unless *additional risk control methods are applied to reduce risk*. See your Supervisor. Detailed action and plan required. Supervisor to review QEWs interpretation of *Likelihood of Occurrence* evaluation of parameters. Focus review on *Probability (Pr)* and ensure that subjective evaluation was acceptable. May require specific Management review.

6.2. Electrical Hazard Identification

As a component of the *Risk Assessment Procedure* and as required by *OH&S regulations* employers shall identify when employees would be exposed to electrical hazards and apply the expected *Hierarchy of Risk Control Methods* (e.g. both preventive and protective) to mitigate exposure to employees or reduce risk of exposure to *as low as reasonably practicable (ALARP)*. The two main electrical hazards are *Shock and Arc Flash (with accompanying Arc Blast)*.

De-energizing electrical equipment and *Establishing an Electrically Safe Work Condition* before working on it is a mandatory requirement of this *Electrical Safety Program*. If an *Electrically Safe Work Condition* cannot be established, then *energized electrical work tasks* must be justified based on increased hazard or risk or infeasibility to complete the work in a de-energized state.

Additionally, an *Energized Electrical Work Permit (EEWP)* may be required before *energized electrical work* is performed. Refer to *ESP Section 7.0* for specific requirements when an *EEWP* would be required.

All hazards, including electrical hazards, must be taken into account when planning a Job and related to the specific *energized electrical work task(s)* that are required to be completed. *A Risk Assessment Procedure is required to be documented for energized electrical work tasks completed by a QEW. The purpose of a Risk Assessment Procedure is to e*valuate the overall Risk Level (e.g. *Residual Risk Level* after applying the *Hierarchy of Risk Control Methods* to reduce risk) of the *energized electrical work task*.

The *hierarchy of preventive and protective risk control methods* that shall be implemented when completing the *Risk Assessment Procedure* is:

1. De-energize, isolation and LOTO;
2. *Substitution* with safer systems or processes;
3. Engineering "*Safety by Design*" including effective equipment maintenance;
4. Warning signs and barricading;
5. Administrative controls, *training and procedures*;
6. Electrical Specific PPE, Tools & Equipment with proper care, use and maintenance.

This *Electrical Safety Program* applies to City of Vancouver employees and contract workers that may be exposed to *arc flash* and/or *shock* and outlines specific requirements to be applied as *preventive and protective risk control methods* to reduce risk. For all workers, specific requirements apply related to *work tasks* in proximity to *overhead power lines* or when using *portable cord-and-plug-connected electric equipment, and cord sets (extension cords)* to accomplish their assigned *work tasks*. Where Non-Electrical Workers with defined roles and responsibilities such as a Qualified Operations Worker (QOW) are employed specific rules apply as defined in *Section 3.0*.

This ESP as identified above will be applied against a "Work Flow Process" as included in Appendix B – Application of the Electrical Safety Program in the Work Flow Process when working on energized electrical equipment at City of Vancouver.

6.2.1. Shock

Electric *shock* is direct contact (or being in close proximity) with exposed *energized electrical conductors or circuit parts* that causes the flow of electrical current through the human body due to a potential (e.g. voltage) difference (including *Step or Touch Potential* per the definitions provided in *Appendix A – Definitions, Acronyms and URLs*).

When there are *exposed energized conductors and circuit parts* related to *energized electrical work task(s)* potential exposure to electric *shock* is related to inadvertent movement.

The severity of the *shock* is determined by the amount of current flow, the total time that it flows through the body, and where it flows through the body. A fatality (i.e. electrocution) can generally be the result of current magnitudes of approximately 50 mA or more in a healthy adult human. Burns to the skin and damage to internal organs are also another potential effect of current flow through the body (electrical *shock* exposure).

When a *work task* is performed in proximity to an energized *overhead power line* or when excavating an energized buried power cable there is a high risk of exposure to electric *shock*. The requirements of this *Electrical Safety Program* shall be followed to reduce risk of exposure.

A *shock hazard* must be considered at any voltage equal to or greater than 30 V ac or dc as defined in *CSA Z462*. *Shock hazards* exist for both ac and dc voltage/current. For consequences of a *shock*, see *Appendix E Electrical Hazard Risk Assessment Matrix*.

When a Qualified Electrical Worker assesses that the electrical equipment to be worked on is adequately insulated, guarded and uses finger safe components there would be no *shock risk*.

6.2.2. Arc Flash

Electrical equipment that faults due to an *abnormal condition* and creates an *arcing fault* and *arc flash*, can expose a worker to *arc flash incident energy* (e.g. heat) causing severe burns to exposed skin. *Arc flashes* are created when the insulating air gap between *exposed energized conductors or circuit parts* is compromised, and current flows through the air between two or more conductors, or conductors to ground (e.g. the air is ionized and becomes a conductor).

Some secondary hazards related to an *arc flash* are:

- Ignition of clothing that is not *arc-rated* or materials in the proximity of electrical equipment catch on fire;
- Toxic smoke inhalation from vaporized copper;
- Noise that could damage hearing;
- High intensity UV/IR light that may damage eyesight;
- Flying shrapnel and molten metal that may cause injury or damage to health; and
- Extreme equipment damage and resultant down time for operations.

Figure 1 provides a graphic representation of an *arc flash* and the primary hazard of exposure to *incident energy* (e.g. heat) and the secondary hazards:

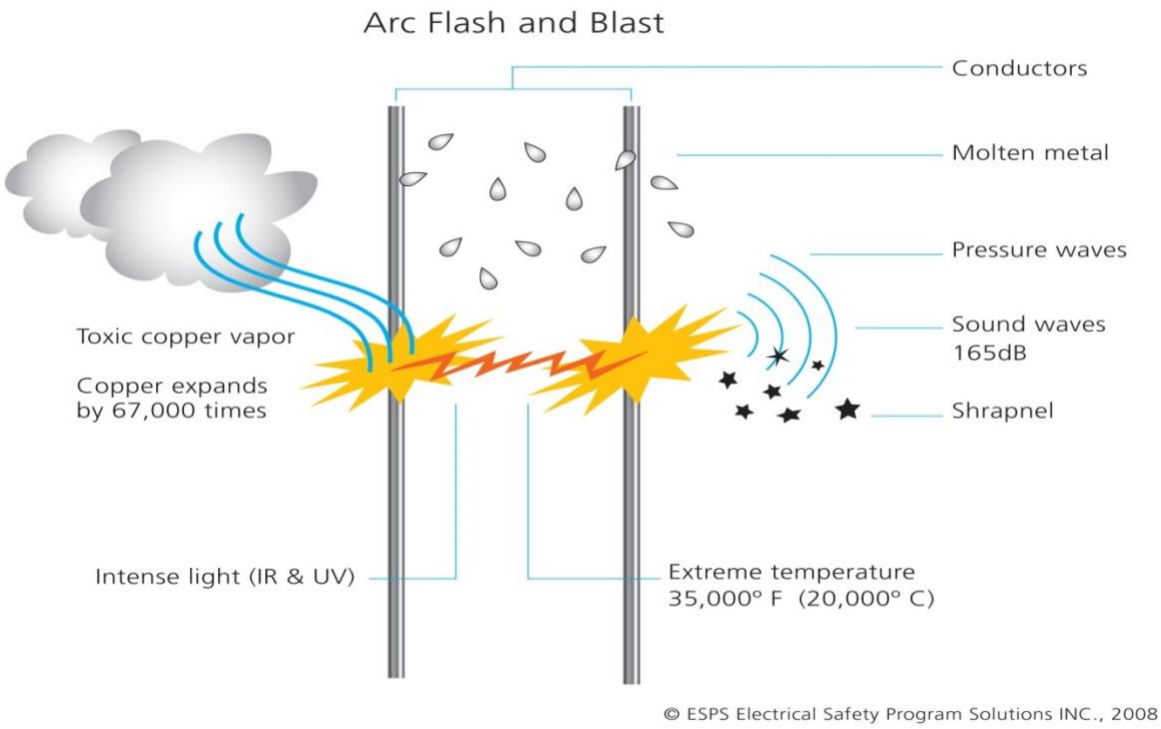

Figure 1 – Arc Flash Graphic

An *arc flash* can be caused by a number of *abnormal conditions* on *energized electrical equipment* including, but not limited to:

- QEW or QIW is not competent for the *work task*;
- Human error during interaction;
- Human behaviour deficiencies;
- Animals entering the equipment;
- Dust and impurities or corrosion on or within the conductors;
- Condensation of water on the surface of insulating material;
- Over-voltages across narrow gaps;
- Insulation breakdown;
- Loose connections;
- Infant mortality, new equipment fails after commissioning;
- Inadequate maintenance of equipment (includes test instruments and specialized testing equipment);
- Poorly designed or incorrect equipment; and
- Improper/inadequate *work procedures*.

Specific consequences of an *arc flash* are identified in *Appendix E Risk Assessment Procedure and Electrical Hazard Risk Assessment Matrix* related to completing the required *Arc Flash Risk Assessment* and *Risk Assessment Procedure (RAP).*

6.2.3. Arc Blast

An *arc blast* is associated with the release of pressure as a result of *arcing fault current* caused the expansion of hot air and vaporization of copper. Potential injury or damage to health associated with an *arc blast* are high pressures, sound and shrapnel. The high pressures that may be created can easily exceed hundreds of pounds per square foot, pushing workers back from the equipment they are working on, knocking workers off ladders, breaking bones, rupturing eardrums, and collapsing lungs. The sounds associated with these pressures can reach 165 dB. In addition, material and molten metal can be expelled away from the arc at speeds exceeding 1120 kilometres per hour or 700 miles per hour, fast enough for shrapnel to penetrate the human body.

The potential *arc flash arc blast* pressure can push the worker away from the *arc flash event*, but can also cause physical trauma.

The potential release of arc flash arc blast pressure relates to the “arcing fault current” and NOT the potential incident energy related to the arc flash. This information is available in the IEEE 3007.3 IEEE Recommended Practice for Electrical Safety in Industrial and Commercial Power Systems based on research by Dr. Ralph Lee. To clarify an incident energy exposure of 1.2 cal/cm^2 when wearing flammable clothing is dangerous as the clothing will catch on fire and be the fuel to cause a potential significant burn to the skin.

Specific consequences of *arc blast* are identified in *Appendix E Electrical Hazard Risk Assessment Matrix* related to completing the required *Arc Flash Risk Assessment* and *Risk Assessment Procedure*. It is noted that there are no statistics available that indicate that *arc blast* has caused a fatal injury, reversible injury should be considered as the most probable worst-case harm when completing the *Risk Assessment Procedure*.

6.3. What is Energized Electrical Work

At City of Vancouver *energized electrical work tasks* include the following:

1. Intentionally entering and performing an energized diagnostic or troubleshooting *work task* inside the *Restricted Approach Boundary for shock* is *energized electrical work*.
2. Completing a justified and authorized energized electrical repair or alteration *work task* is *energized electrical work*.
3. *Work tasks* where the QEW LV, HV or TQW interacts with the electrical equipment when conductors or circuit parts are not exposed, but an increased likelihood of injury from an exposure to an *arc flash hazard* exists. The following *work tasks* do not expose a QEW to *arc flash or shock hazards*:
    a. Using remote racking systems for racking in or out of power circuit breakers doesn't expose a QEW to *arc flash* as long as the QEW stands outside the *Arc Flash Boundary*.
    b. Low or high voltage *Arc Resistant Switchgear* racking in or out of power circuit breakers through door doesn't require *Arc Flash PPE* to be worn.
4. Isolation *work tasks* of racking in or out power circuit breakers or installing *temporary protective grounds* are not maintenance *work tasks* but will expose a QEW to *arc flash* and/or *shock* and are *energized electrical work tasks*.
5. Some examples of *work tasks* that are *energized electrical work* are:
    a. Voltage measurement.
    b. Current measurement.
    c. Manual racking in and out of power circuit breakers.
    d. Installing *temporary protective grounds*.
    e. Disconnecting batteries depending on where disconnected.
    f. Justified repair and alteration of conductors and circuit parts in an energized state.

See *ESP Section 6.0 Table 2 Estimate of the Likelihood of Occurrence of an Arc Flash Incident for AC and DC Systems* for additional *work tasks* that would be *energized electrical work*.

At the City of Vancouver the following are NOT considered *energized electrical work tasks*:

1. Operating (e.g. opening or closing circuit breaker, disconnect switches and contactors) *energized electrical equipment* low or high voltage that is in a "*Normal Operating Condition*" is not *energized electrical work* and doesn't require *arc flash and shock PPE* to be worn as per *CSA Z462 definitions*. A *procedure* should be followed.
2. Low voltage <750V electrical equipment branch circuit isolations (e.g. opening or closing, manual or automatic contactor operation) would not require *arc flash and shock PPE* to be worn.
3. High voltage >750V electrical equipment branch circuit isolations (e.g. opening or closing) would not require *arc flash and shock PPE* to be worn. If the high voltage electrical equipment has been determined to be a higher risk of failure due to age, manufacturer or operating experience then *arc flash PPE* as required by the information provided in *Arc Flash & Shock Equipment Results Tables or included with Work Orders* would be required.
4. Low or high voltage power distribution switching & isolation *work tasks* (e.g. opening and closing, manual or automatic contactor operation) are only performed by QEWs and under "*Normal Operating Conditions*" would not require *arc flash and shock PPE* to be worn.
5. Manual or automatic operation of low or high voltage contactors under "*Normal Operating Conditions*" does not require *arc flash and shock PPE* to be worn.
6. Operating energized Variable Frequency Drives (VFDs) or other motor starters (e.g. soft starters, reduced voltage starters) would not require *arc flash or shock PPE* to be worn under *normal operating conditions*.

6.3.1. Energized Electrical Work Task Estimate of the Likelihood of Occurrence of an Arc Flash and Shock Hazard Identification & Risk Assessment

Acceptable and allowable work is *energized electrical work* where the risk has been assessed to be minimal for a QEW or QIW to complete the *energized electrical work task*. The *energized electrical work task* is typically a core competency for a QEW or QIW. The nature of the *work task* is not complex, and the work is visible to the worker.

Generally, the use of an approved digital multi-meter or other test instrument by a QEW or QIW on electrical conductors or circuit parts less than 750VAC would be considered acceptable or allowable as long as PPE is available to reduce potential injury or damage to health and *Likelihood of Occurrence* is acceptable.

Unacceptable *energized work tasks* will occur where *arc flash PPE* is not available to reduce the burn injury to Second Degree or less and where *Likelihood of Occurrence parameters* cannot be reduced to an acceptable value.

ESP Table 2 below is used when evaluating the *Likelihood of Occurrence* of an *arcing fault* and *arc flash* occurring related to specific *work task(s)* based on equipment condition. This table provides direction with respect to *Likelihood of Occurrence* of an *arcing fault* and *arc flash* and/or potential exposure to shock as YES or NO.

With respect to arc flash, an Incident Energy Analysis or use of the Arc Flash PPE Category "Table Method" would then be required to determine additional protective measures to apply against the energized electrical work task to reduce risk. Refer to Section 6.6 Arc Flash Risk Assessment below to determine specific information related to voltage of equipment and transformer rating, to determine if an arcing fault can be sustained and create an arc flash, and to determine arc-rated clothing requirements when ESP Table 2 advises the Likelihood of Occurrence is Yes.

With respect to *shock,* a separate *Shock Risk Assessment* is required for the specific *work task*. Refer to *Section 6.5 Shock Risk Assessment* for specific information to complete a *work task*'s *Shock Risk Assessment*.

ESP Table 2 also provides guidance on when an Energized Electrical Work Permit (EEWP) and an Energized Electrical Job Risk Assessment (EEJRA) may be required based on the work task description.

Note: This table is derived from *CSA Z462-2018 Table 2*.

Table 2 – Energized Electrical Work Task Estimate of Likelihood of Occurrence of Arc Flash and Shock Hazard Identification & Risk Assessment

Work Task Description(1)	Equipment Condition(2) of Maintenance	Likelihood of Occurrence(3) of Exposure to an Arcing Fault & Arc Flash	Shock Hazard(4) Yes / No	EEWP(5) Needed	EEJRA(6) Needed	Work Task Residual Risk Level(7)
Task #1: **Reading a panel meter while operating a meter switch** or using an HMI to operate electrical equipment (includes reading digital revenue meters).	Any	No	No	No	No	N/A
Task #2: **Performing infrared thermography** and other **non-contact inspections** outside the *Restricted Approach Boundary*. This activity does **not** include opening of doors or covers.	Any	No	No	No		N/A
Task #2A: **Performing infrared thermography** and servicing including penetration of the *Restricted Approach Boundary*. This activity does include opening of doors or covers, tightening loose connections, and reinstalling doors and covers.	Any	Yes	Yes	Yes	Yes	Low
Task #3: ***Working on*** control circuits with *exposed energized electrical conductors and circuit parts*, **nominal 125 Volts ac or dc, or below without any other exposed energized equipment** over **nominal 125 Volts ac or dc**, including opening of hinged covers to gain access.	Any	No	Yes	No	No	N/A

Work Task Description[1]	Equipment Condition[2] of Maintenance	Likelihood of Occurrence[3] of Exposure to an Arcing Fault & Arc Flash	Shock Hazard[4] Yes / No	EEWP[5] Needed	EEJRA[6] Needed	Work Task Residual Risk Level[7]
Task #4: **Visual examination of insulated cable** with **no** manipulation of cable.	Any	No	No if not *exposed conductors or circuit parts*.	No	No	N/A
Task #5: For ***dc*** systems, **insertion or removal of individual battery of a battery system in an open rack** (e.g. lifting the battery off or onto the open rack, physically removing the battery after conductors are removed).	Any	No	No *Insulated hand tools* mandatory.	No	No	N/A
Task #6: For ***dc*** systems, **maintenance on** (e.g. **voltage measurement**) **a single battery in an open rack**.	Any	No	No *Insulated hand tools* mandatory.	No	No	N/A
Task #7A: For ***ac*** systems ***working on*** *energized electrical conductors and circuit parts*, including **voltage testing and current measurement**, **120/240VAC single phase**.	Any	No	Yes	No	Yes	Low
Task #7B: For ***ac*** systems, ***working on*** work on *energized electrical conductors and circuit parts*, including **voltage testing and current measurement**, **120/208VAC three phase**.	Any	Yes	Yes	No	Yes	Med
Task #7C: For ***ac*** systems, ***working on*** *energized electrical conductors and circuit parts* including **voltage testing and current measurement**, **480VAC** or **600VAC**. (e.g: test-before-touch)	Any	Yes.	Yes	No	Yes	Med
Task#7D: For ***ac*** systems, ***working on*** *energized electrical conductors and circuit parts* including **voltage testing**, **>750VAC**.	Any	Yes	Yes	No	Yes	Med

Work Task Description[1]	Equipment Condition[2] of Maintenance	Likelihood of Occurrence[3] of Exposure to an Arcing Fault & Arc Flash	Shock Hazard[4] Yes / No	EEWP[5] Needed	EEJRA[6] Needed	Work Task Residual Risk Level[7]
Task 7E: **COV Rusty Pole Program:** **Visual and mechanical inspection of exterior of poles and lighting standards for the purposes of assessing structural condition. Applies to any supply voltage or transformer size.** **Enclosure doors and covers are not opened or removed.** **Performed by QOW's.**	Any	No	No	No	No	N/A
Task 7F: **COV Rusty Pole Program:** **Verifying bonding connections. Applies to 120/240 VAC single phase or 120/208 VAC three phase with supply transformer 30 kVA or less.** **Performed by QEWs.**	Any	No	Yes	No	Yes	Low
Task 7G: **COV Rusty Pole Program:** **Verifying bonding connections. Applies to single phase with voltage greater than 240 VAC, 120/240 VAC three phase with supply transformer greater than 30 kVA, or three phase with voltage greater than 240 VAC.** **Performed by QEWs.**	Any	Yes	Yes	No	Yes	Low

Work Task Description[1]	Equipment Condition[2] of Maintenance	Likelihood of Occurrence[3] of Exposure to an Arcing Fault & Arc Flash	Shock Hazard[4] Yes / No	EEWP[5] Needed	EEJRA[6] Needed	Work Task Residual Risk Level[7]
Task #8: For ***dc*** systems, ***working on*** (e.g. voltage measurement or repair/alteration) *energized electrical conductors and circuit parts* of series-connected batteries in a string. Work task performed on combined battery string at charger output, **125VDC**.	Any	No	No	No Yes if repair or alteration	No	Low
Task #9: **Removal or installation of CBs or switches 120/240VAC**	Any	Yes	Yes	Yes	Yes	Low
Task #9: **Removal or installation of CBs or switches 208/480/600VAC**	Any	Yes	Yes	Yes	Yes	Med
Task #10A: **Opening hinged door(s) or cover(s) or removal of bolted covers** (to expose bare, *energized electrical conductors and circuit parts*). For *dc* systems, this includes bolted covers, such as battery terminal covers.	Abnormal	Yes	Yes	ESP Exemp for Covers	Yes	Med
Task #10B: **Opening hinged door(s) or cover(s) or removal of bolted covers on 125VDC or 120VAC control panels** (to expose bare or partially exposed, *energized electrical conductors and circuit parts*).	Normal	No	No	ESP Exemp for Covers	No	Low
Task #10C: **Opening hinged door(s) or cover(s)** (to expose bare or partially exposed, *energized electrical conductors and circuit parts*).	Normal	No	No	No	No	N/A
Task #11: **Application of** *temporary protective grounding* equipment, **after voltage test**.	Any	Yes	Yes	Yes	Yes	Med

Work Task Description[1]	Equipment Condition[2] of Maintenance	Likelihood of Occurrence[3] of Exposure to an Arcing Fault & Arc Flash	Shock Hazard[4] Yes / No	EEWP[5] Needed	EEJRA[6] Needed	Work Task Residual Risk Level[7]
Task #12: ***Working on control circuits*** (e.g. voltage measurement, repair or alteration) with *exposed energized electrical conductors and circuit parts*, **greater than 120 Volts**.	Any	Yes	Yes	Yes for repair and alteration	Yes	Med
Task #13: **Insertion or removal of individual starter buckets from MCC**.	Any	Yes	Yes	Yes	Yes	Med
Task #14: **Insertion or removal** (racking in or out) **of CBs or starters** from cubicles, doors open or closed.	Any	Yes	No	Yes	Yes	Low
Task #15: **Insertion or removal** of **plug-in devices into or from busways**.	Any	Yes	Yes	Yes	Yes	Med
Task #16A: **Examination of insulated cable with manipulation of cable** at point of termination, **>=208VAC**. Higher probability of arcing fault occurring when manipulation of conductor is at point of termination.	Any	Yes	Yes	No	Yes	Med
Task #16B: **Examination of insulated cable with manipulation of cable** in wireway / enclosure / vault with **no** *exposed conductors or circuit parts*.	Any	No	No	No	No	N/A
Task #17A: ***Working on*** *exposed energized electrical conductors and circuit parts* of equipment directly supplied by a panelboard or motor control center, **120/240VAC**.	Any	No	Yes	No	Yes	Low

Work Task Description(1)	Equipment Condition(2) of Maintenance	Likelihood of Occurrence(3) of Exposure to an Arcing Fault & Arc Flash	Shock Hazard(4) Yes / No	EEWP(5) Needed	EEJRA(6) Needed	Work Task Residual Risk Level(7)
Task #17B: ***Working on*** *exposed energized electrical conductors or circuit parts* of equipment directly supplied by a panelboard or motor control centre, **208VAC, 480VAC and 600VAC**.	Any	Yes	Yes	No	Yes	Med
Task #18: **Insertion or removal of revenue meters** (kW-hour, at primary voltage and current).	Any	Yes	Yes	Yes	Yes	Low
Task #19A: **Removal of battery conductive intercell connector covers** – single battery **<125VDC**	Any	Yes	No Confirm specific DC voltage level, <300V? *Insulated hand tools* mandatory	No	No	N/A
Task #19B: **Removal of battery conductive intercell connector covers**, battery string equal to or **>125VDC**.	Any	Yes	No Confirm specific DC voltage level, <300V? *Insulated hand tools* mandatory.	Yes	Yes	Low
Task #20: For ***dc*** systems, ***working on*** *exposed energized electrical conductors and circuit parts* of **branch circuit utilization equipment** (e.g. **switchgear**) directly supplied by a *dc* source, **125VDC**.	Any	No	No	No	No	N/A
Task #21: **After opening door, removing or inserting voltage transformer (PT) or control power transformer (CPT) compartments**.	Any	Yes	Yes	Yes	Yes	Low
Task #22: **Operation of outdoor disconnect switch** (***hookstick operated***) at **1kV through 15kV**.	Any	Yes	Yes	No	Yes	Low

Work Task Description[1]	Equipment Condition[2] of Maintenance	Likelihood of Occurrence[3] of Exposure to an Arcing Fault & Arc Flash	Shock Hazard[4] Yes / No	EEWP[5] Needed	EEJRA[6] Needed	Work Task Residual Risk Level[7]
Task #23: **Operation of outdoor disconnect switch** (***gang-operated, from grade***) **1kV through 15kV**.	Any	Yes	Yes	No	Yes	Low
Task #24: **Operation of a circuit breaker (CB), switch, contactor** or **starter**.	Normal **/** Abnormal	No **/** Yes	N/A **/** Yes	No	No **/** Yes	N/A **/** Med
Task #25: ***Voltage testing*** on **individual battery or individual battery of a multi-battery string**.	Normal **/** Abnormal	No **/** Yes	N/A **/** Yes	No	No **/** Yes	N/A **/** Med
Task #26: **Removal or installation of covers** for equipment such as wire ways, junction boxes, and cable trays that does not expose bare, *energized electrical conductors and circuit parts*.	Normal **/** Abnormal	No Yes	No Yes	No	No Yes	N/A
Task #27: **Opening a panelboard hinged door or cover** to access dead front overcurrent devices.	Normal **/** Abnormal	No **/** Yes	Yes	No **/** Yes	No **/** Yes	N/A **/** Med 480/600V
Task #28: **Removal of battery nonconductive intercell connector covers**.	Normal **/** Abnormal	No **/** Yes	No / Yes	No **/** Yes	No **/** Yes	N/A **/** N/A
Task #29A: **Maintenance and testing** (e.g. voltage measurement or repair/alteration) on **individual battery cells in an open rack**, **125VDC**.	Normal	No	No	No	No	N/A
Task #29B: ***Maintenance and testing*** (e.g. voltage measurement or repair/alteration) on **individual battery cells in an open rack**, **125VDC**.	Abnormal	No	No	No	No	N/A

Work Task Description[1]	Equipment Condition[2] of Maintenance	Likelihood of Occurrence[3] of Exposure to an Arcing Fault & Arc Flash	Shock Hazard[4] Yes / No	EEWP[5] Needed	EEJRA[6] Needed	Work Task Residual Risk Level[7]
Task #30: **Insertion or removal of individual cells** (e.g. battery) or **multi-cell** (e.g. multi-battery) **units of a battery system in an open rack**.	Abnormal	No **/** Yes	No	No **/** Yes	No **/** Yes	N/A
Task #31: **Arc-resistant switchgear, 1 kV through 15 kV** (for clearing times of less than 0.5 sec with a prospective fault current not to exceed the arc-resistant rating of the equipment) and **metal enclosed interrupter switchgear**, fused or unfused of arc resistant type construction, **1 kV through 15 kV**: • Insertion or removal (racking) of *CBs* from cubicles; • Insertion or removal (racking) of *ground and test device*; or • Insertion or removal (racking) of *voltage transformers* on or off the bus.	Normal **/** Abnormal	No **/** Yes	No **/** No	No **/** Yes	No **/** Yes	N/A **/** Med

Equipment condition is considered to be "***Normal***" if **ALL** of the following circumstances apply:

- The equipment is *properly installed* in accordance with the *manufacturer's recommendations* and *applicable industry codes and standards*;
- The equipment is *properly maintained* in accordance with the *manufacturer's recommendations* and *applicable industry codes and standards*;
- The equipment is *used in accordance with instructions* included in the *listing* and *labeling* and in accordance with *manufacturer's instructions*;
- Equipment doors are closed and secured;
- Equipment covers are in place and secured; and
- There is *NO evidence of an impending failure* such as arcing, overheating, loose or bound equipment parts, visible damage, or deterioration.

Notes:

1. *Please ensure you read and interpret the specific work task description and correctly interpret it against the Job and the individual discrete work tasks you will have to perform.*
2. *With respect to Condition of Maintenance. If possible confirm what electrical equipment maintenance has been completed. If no information is available assess condition in real time by first using simple "Look, Listen and Smell" when you are in front of the energized electrical equipment that you will be working on.*

3. *An Arc Flash Risk Assessment shall be completed and documented if YES. Please also note that although the Likelihood of Occurrence says YES the QEW must still validate that the incident energy is >1.2 cal/cm^2 on an Equipment Label or Results Table or that the voltage of the electrical equipment is high enough to sustain an arcing fault and create an arc flash e.g. equal to or >208VAC or >125VDC.*
4. *A Shock Risk Assessment shall be completed and documented if YES.*
5. *Energized Electrical Work Permit as required based on CSA Z462, Clause 4.3.2.3.*
6. *Electrical Safety Program, Energized Electrical Job Risk Assessment (EEJRA) form.*
7. *Danatec has completed a detailed Risk Assessment Procedure for the work task descriptions listed. The Residual Risk Level illustrated is an outcome of the risk assessment process. The Residual Risk Level assessed is achieved by the application of all available Hierarchy of Risk Control Methods. Specifically, Qualified & Competent Worker, Human Performance normal, Condition of Maintenance normal. Design of electrical equipment where applicable provides avoidance, and worker can egress work task area. As required an Arc Flash Risk Assessment and/or Shock Risk Assessment have been completed and additional protective measures identified and applied. Two QEWs or QIWs identified when required. Electrical Safe Operating Procedures applied when required. EEJRA completed. Use EEWP when required. Please refer to the Energized Electrical Work Task Risk Register Table Excel Spreadsheet.*

6.4. Electrical Risk Assessment

When *energized electrical conductors or circuit parts* are placed in an *abnormal condition* where personnel may be exposed to electrical hazards (i.e. *electrical shock*, *arc flash* and associated *arc blast*), an *Electrical Risk Assessment* comprised of both a *Shock and Arc Flash Risk Assessment* is required in order to determine the potential of injury or damage to health (e.g. harm) to the worker and the *Likelihood Of Occurrence*. Additionally, the *Shock and Arc Flash Risk Assessment*s are used to determine *additional protective measures* to reduce risk, which include establishing *Boundaries of Approach* and for the selection of appropriate *Electrical Specific PPE, Tools & Equipment* to protect personnel from such hazards and reduce risk.

6.5. Shock Risk Assessment (SRA)

A *Shock Risk Assessment* shall be performed:

1. To identify *shock hazards* related to specific *energized work tasks*.
2. To estimate the *Likelihood of Occurrence* of injury or damage to health and the potential severity of injury or damage to health.
3. To determine if *additional protective measures* are required, including the use of PPE.

ESP Table 2 is derived from *CSA Z462 Table 2* and lists typical energized electrical works. A column has been provided in *ESP Table 2* that identifies if a *shock hazard* exists for the listed

work task based on the expectation that there may be *exposed conductors and circuit parts* with inadvertent movement risk. *ESP Table 2* shall be used by a QEW or QIW to assist them in determining if they will be exposed to the *shock hazard*.

If additional protective measures for the shock hazard are required related to the energized electrical work task, they shall be selected and implemented according to the Hierarchy of Risk Control Methods. If the additional protective measures include PPE, tools & equipment then the following is required.

A. Determine the maximum voltage to which personnel may be exposed on *energized electrical conductors or circuit parts*.

B. Determine the Shock Approach Boundary requirements (as per CSA Z462 Table 1A for ac or CSA Z462 Table 1B for dc). If an energized electrical work task is performed inside the Restricted Approach Boundary appropriate shock PPE, tools & equipment shall be selected and used by the QEW or QIW.

C. Determine the approved the *shock* related *PPE, Tools & Equipment* necessary in order to eliminate or minimize the possibility of electrical *shock* to the worker.

For a QEW or QIW risk of exposure to *shock* primarily relates to the <u>risk of inadvertent movement</u> and contact or proximity to an exposed energized conductor or circuit part on electrical equipment. For Non-Electrical Workers exposure to *shock* relates to the condition of normally insulated *portable cord-and-plug-connected electric equipment, and extension cords* and the lack of use of a GFCI. Statistically in North America electrical *shock*s and electrocutions primarily occur for Non-Electrical Workers related to working in proximity to *overhead power lines* and or buried power cables.

If a worker is not exposed to *exposed energized conductors or circuit parts*, there is no *shock hazard* (e.g. finger safe components, adequate insulation or permanent or temporary guarding has been installed). A QEW or QIW shall assess the electrical equipment to be worked on and determine based on qualifications and competency whether adequate insulation or guarding is present and that there is no *shock* risk.

6.5.1. Shock Approach Boundaries

When completing a *Shock Risk Assessment*, *CSA Z462 Table 1A or 1B* are used to determine the two *Shock Approach Boundaries* (i.e. *Limited and Restricted*). Refer to those tables for specific requirements.

A graphical representation is provided for the two *shock approach boundaries* in *Figure 3*. The relationship of the *Arc Flash Boundary* is also indicated. The *Arc Flash Boundary* can be outside or inside the *Limited Approach Boundary* (See *Section 6.8.2 Substitution*), but in most cases will be outside the *Limited Approach Boundary* for *shock*.

When a QEW performs justified *energized electrical work* and crosses the *shock approach boundaries* the following rules and *preventive and protective risk control methods* must be applied to reduce risk of exposure:

- *Limited Approach Boundary for Shock* – Minimum Standard/Basic COV PPE requirements for the specific Facility and/or Department. QEWs and QIW's can enter this approach boundary without Shock PPE worn. Non-Electrical Workers must be continually escorted by a QEW or QIW within the Limited approach Boundary. An Electrical Work Zone with appropriate barricading shall be established at the Limited Approach Boundary or Arc Flash Boundary whichever is the furthest away from the electrical equipment.
- *Restricted Approach Boundary for Shock* – QEW or QIW is qualified and competent for the job, *Electrical Specific PPE, Tools & Equipment* as determined through application of *Section 6.5.2 Shock PPE Tools & Equipment*, authorized *work order* and work plan, *risk assessment*, and the use of a *procedure*. The QEW or QIW must fill out an EEJRA and may require an *EEWP in some cases.*

Figure 2 below shows the Arc Flash and Shock Risk Assessments, Additional Protective Measures in a printable graphic for the workplace.

Figure 2 – Arc Flash and Shock Risk Assessments, Additional Protective Measures

6.5.2. Shock PPE Tools & Equipment

Appropriate Shock PPE, Tools & Equipment will be selected following the completion of the Shock Risk Assessment establishing the Limited and Restricted Approach Boundaries. Depending on the work task specific Shock PPE, Tools & Equipment may be required to protect workers from exposure if their work is inside the Restricted Approach Boundary. Temporary guarding (e.g. Class 0, 1000V rubber insulating blankets) may also be applied to eliminate exposure to exposed energized conductors and circuit parts.

The QEW or QIW will assess the equipment that will be worked on and establish that there are finger safe components, and adequate insulation and guarding is installed and there may be no further requirement for *Shock PPE, Tools & Equipment*. Temporary guarding with appropriately rated rubber insulating blanket can also be installed to mitigate or limit risk of exposure to *shock*.

Please refer to Section 8.0 Electrical Specific PPE, Tools & Equipment of this Electrical Safety Program for specific information on shock Electrical Specific PPE, Tools & Equipment and the tables of information in the Appendices related to specification of Electrical Specific PPE, Tools & Equipment for additional information related to selection, care, use and maintenance of shock related Electrical Specific PPE, Tools & Equipment.

6.6. Arc Flash Risk Assessment (AFRA)

An Arc Flash Risk Assessment shall be performed:

1. To identify the *arc flash hazard* related to specific energized *work task(s)*.
2. To estimate the *Likelihood of Occurrence* of injury or damage to health and the potential severity of injury or damage to health.
3. To determine if *additional protective measures* are required, including the use of PPE.

When the estimate of the *Likelihood of Occurrence* of injury or damage to health and the potential severity of injury or damage to health are assessed, they shall take into consideration the design of the electrical equipment and specifically protective devices and operating times and the operating condition of the *energized electrical equipment*, including *condition of maintenance*.

ESP Table 2 is derived from CSA Z462 Table 2 and shall be used to determine the Likelihood of Occurrence of an arcing fault and arc flash for energized electrical work tasks identified based on the condition of maintenance of the electrical equipment that the work task would be performed on.

If additional protective measures for the arc flash hazard are required related to the energized electrical work task, they shall be selected and implemented according to the Hierarchy of Risk Control Methods. When additional protective measures include the use of PPE, the following shall be determined:

1. Appropriate related *safe operating practices* e.g. use of an *Electrical Work Zone*, need for use of a *procedure*, etc.

2. Determine and apply the requirements of the *Arc Flash Boundary*.
3. Determine and properly use the *Arc Flash PPE* that will be required to be used by the QEW or QIW when they are inside the *Arc Flash Boundary* and completing the *energized work task* that may expose them to an *arc flash hazard*.

The purpose of completing this *Arc Flash Risk Assessment* is to define the appropriate *arc flash protective clothing* the worker will require to don in order to reduce risk related to limiting injury or damage to health while working on *energized electrical conductors or circuit parts* when there is a risk of an *arcing fault* and *arc flash event* due to *abnormal conditions*.

The QEW or QIW can use the supporting forms and flow charts included in the *Appendices* of this *Electrical Safety Program* to perform an *Arc Flash Risk Assessment* related to the *energized electrical work task* assigned to them. The information and *Arc Flash Risk Assessment.* Processes referenced in this *Electrical Safety Program* are taken from the *CSA Z462 Workplace electrical safety Standard*, or other Standards such as *IEEE 1584 Guide for Performing Arc-Flash Hazard Calculations*. For a detailed list of available formulas for calculating *incident energy* please refer to *CSA Z462 Annex D Incident energy and arc flash boundary calculation methods*.

6.6.1. When is Arc Flash PPE Not Required

Where the following conditions exist for an *energized electrical work task*, an *Arc Flash Risk Assessment* is <u>not</u> required, and no *arc flash protective clothing* is required to be worn. As defined in this *Electrical Safety Program ESP Level 0* minimum 100% natural fibre clothing or *City of Vancouver Standard PPE* will be required as outlined in *Section 8.0 Electrical Specific PPE, Tools & Equipment*.

Conditions where an *Arc Flash Risk Assessment* is not required and no arc flash protective clothing is required to be worn:

1. For single phase systems, an *energized electrical work task* is performed where:
   - Voltage is less than or equal to 240 VAC.
2. For three phase systems, an *energized electrical work task* is performed where:
   - The *energized electrical conductor or circuit part* to be worked on is rated less than or equal to 208, Volts, and
   - The *energized electrical conductor or circuit part* to be worked on is supplied by one transformer, and
   - The transformer supplying the *energized electrical conductor or circuit part* is rated less

than or equal to 30 kVA.

Notes:

Protection for shock may still be required if insulating and guarding is not adequate and there is risk of inadvertent movement and contact with an exposed energized conductor or circuit part.

For 120/240V, single phase energized electrical work ESP Level 0 clothing is all that is required. This is per IEEE 1584-2018 where no arc flash hazard exists for single phase systems at 120 VAC or 240 VAC, regardless of transformer size. For single phase systems with voltages greater than 240 VAC an arc flash hazard is assumed in this ESP. Use Method 1 or 2 per this ESP and consult IEEE 1584 for further guidance.

For 120/208VAC, three phase work tasks, a minimum ESP Level 1 arc-rated clothing ensemble as defined in Section 8.0 Electrical Specific PPE, Tools & Equipment is required when the transformer size upstream of the work task is greater than 30kVA but less than or equal to 300kVA.

The 30 kVA maximum is based on the 2000 amp limit per IEEE 1584 - 2018 for three phase systems, at 208 volt, and an impedance of 4.16%. The 300 kVA maximum rating is based on an impedance of 3.33%, maximum fault clearing time of 2 cycles, maximum short circuit current of 25,000 Amps, and working distance of 18" per the first row of Table 6A in CSA Z462-18 and may be adjusted upwards if impedance is higher and fault clearing time can be maintained at or below 2 cycles. QEWs are advised to verify if the maximum 2000 Amp criteria is satisfied near the 30 kVA lower limit using a short circuit calculation, or that the 8 cal/cm^2 criteria is satisfied near the 300 kVA upper limit using Method 2. In this transformer size range, COV Level 1 PPE is specified which will meet or exceed minimum CSA Z462 Category Table Method PPE Categories (1 or 2, up to 8 cal/cm^2).

6.6.2. Determining Additional Protective Measures When Arc Flash PPE is Required

Where *additional protective measures* are required to reduce *arc flash hazard* risk the QEW can determine the *Arc Flash Boundary* and *Arc Flash PPE* requirements using the following Methods:

Method 1 – **<u>Incident Energy Analysis</u>.** Have a detailed *Engineering Incident Energy Analysis* completed (e.g. *Arc Flash Risk Assessment*). Select *arc-rated* clothing that is greater than or equal to the calculated *incident energy* based on an *arc rating* in *ATPV* or E_{BT}. Use the appropriate calculation method(s) depending on the voltage of the *energized electrical equipment* and its configuration (e.g. arc in a box or arc in open air). The *Arc Flash Boundary*

and *incident energy at an assumed working distance* can be calculated using the formulas identified in *CSA Z462 Annex D* or other formulas available for use for high voltage substations, and transmission and distribution *overhead power lines*. Commercially available *power system study engineering software* is available for use, ETAP, SKM, EasyPower, Arcpro, EDSA and Cyme. It is recommended that the City of Vancouver standardize the software to be used for arc in a box calculation where the voltage is 208VAC to 15kV.

***Note**: Appendix L - Electrical Specific PPE, Tools & Equipment Level (Arc-Rated) Tables provides tables of arc-rated clothing based on CSA Z462 Table 3. Two Levels of arc-rated clothing are identified, Level 1 and Level 2.*

Method 2 – **<u>Arc Flash PPE Category "Table Method</u>."** Use the *Arc Flash PPE Category* or *Table Method* first using *CSA Z462 Table 2* to determine the *Likelihood of Occurrence* of an *arcing fault* and *arc flash* and *if arc flash PPE* is required (Yes or No). Then determine *additional protective measures* using *CSA Z462 Table 6A* or *Table 6B* to specify the *Arc Flash PPE Category number* of *arc flash protective clothing and Equipment*. If you comply with the *parameters* listed, document and use the listed *Arc Flash Boundary* and *Working Distance*. Select *arc-rated* clothing from *CSA Z462 Table 6C*, correlating the *Arc Flash PPE Category* selected to a minimum *arc rating* of protective clothing in *ATPV* or E_{BT}. Where the nominal voltage of the electrical equipment is greater than 15kV *engineering-based Incident Energy Analysis* is required. For high voltage substations, and transmission and distribution *overhead power lines* some of the available Standards for "*Utility Power Systems*" provide "look up" tables that can be referenced to determine *incident energy* if calculations have not been completed.

***Note**: CSA Z462 Annex H, Table H.1 recommends a two Arc Flash PPE Category, system, Arc Flash PPE Category 2 and 4 to simplify specification, procurement and available choices for the QEW or QIW. This is accommodated in this Electrical Safety Program with Appendix L - Electrical Specific PPE, Tools & Equipment Level (Arc-Rated) Tables, Level 1 and Level 2 arc rating clothing.*

6.6.3. Determining Arc Flash PPE Requirements

When an *energized electrical work task* is justified and approved and there is a risk of an *arcing fault* and *arc flash* occurring, *Boundaries of Approach* and *Electrical Specific PPE, Tools & Equipment* must be selected appropriate to the *work task* and the identified hazard. Full body protection with *arc-rated* clothing or PPE must be determined and worn while the *work task* is completed.

As outlined above, Method 1 or Method 2 shall be completed for an *energized electrical work task* where an *abnormal condition* may or is created that could create an *arcing fault* and *arc flash event*. These *two* methods are used to determine *additional protective measures* to *reduce risk*: work practice requirements, the *Arc Flash Boundary* distance and the arc-rated PPE required for *arc flash protection*.

6.6.3.1. Method 1 – Detailed Engineering Based Incident Energy Analysis

An *Engineering Incident Energy Analysis* (e.g. *Arc Flash Risk Assessment*) is comprised of the following basic steps:

1. Collect electrical equipment and system information required for the *incident energy* calculations. Use a *Single Line Diagram* as the starting point. Create the model in *approved power engineering analysis software*.
2. Calculate *maximum available fault current* and validate equipment *withstand ratings*. Determine *minimum and maximum available fault current* operating scenarios for *Incident Energy Analysis* calculations and *protective device clearing time* modeling.
3. Complete *Protection and Coordination Study*.
4. Calculate *arcing fault* currents based on the most practical operating mode.
5. Find protective device clearing times for determined worst case *available fault current* operating scenario. Ensure the *IEEE 1584 "2 Second Guideline"* is used where the modeled *arcing fault* doesn't clear the fault condition with established protective device settings.
6. Select *working distances* based on *IEEE 1584*. Where specific electrical equipment may have shorter *working distances* to the potential *arcing fault* location the default *working distances* can be shortened. Where tools and equipment design may allow for it, an increase in *working distances* can be used. In either case, this should be documented in the report issued.
7. Determine the *Arc Flash Boundary*.
8. Calculate *Incident Energy* at the selected *Working Distance*.
9. The *QEW* determines *Arc Rating (e.g. ATPV or E_{BT} rating) of PPE* for *arc flash protection* using the Equipment Label or the *Incident Energy Analysis Results Table* related to the justified *energized electrical work task*.

The analysis provides, among other things, a detailed assessment of the potential *incident energy* at each point in the electrical distribution system that would be released in the event of an *arcing fault* within the equipment due to an *abnormal condition*. This potential *incident*

energy is measured in calories per centimetre squared (cal/cm^2), or joules per centimetre squared (joules/cm^2) at an *assumed working distance*. This value is used to define the *arc rating* (e.g. *Arc Thermal Performance Value (ATPV)* or *Breakopen Threshold Energy (E_{BT})*) of the PPE that the QEW must wear when an *arcing fault* and *arc flash hazard* exists and the QEW is inside the *Arc Flash Boundary* and executing the *energized electrical work task*.

Where a detailed *Incident Energy Analysis* has been completed *Results Tables* or information on a *Work Order* will be made available to a QEW for supervised industrial facilities.

Detailed *Engineering Incident Energy Analysis* shall be reviewed at minimum every 5 years (following *Section 14.0 Management Of Change*), or when any major modifications to the operating scenarios, facility electrical distribution systems, or utility or power generation supply equipment is undertaken. Such modifications include, but may not be limited to, addition of supply equipment or utility connections, addition of large motors or groups of motors, transformer changes and replacements, and changes to protective devices or their settings.

6.6.3.2. Method 2 – Arc Flash PPE Category "Table Method"

To determine *Additional Protective Measures* using the *Arc Flash PPE Category Table Method* the following tables from *CSA Z462* are to be used:

a. *CSA Z462 Table 6A Arc flash PPE categories for alternating current (ac) systems or 6B Arc flash PPE categories for direct current (dc) systems* When using *Table 6B* additional engineering and/or manufacturer's support will be required to determine the "*available fault current*" for a battery system.
b. *CSA Z462 Table 6C – Personal protective equipment (PPE)*.

Steps to be undertaken are as follows:

1. Select the *work task* description to be performed. If the *work task* description is not listed in *ESP Table 2* (e.g. *CSA Z462 Table 2*) the *Arc Flash PPE Category Table Method* cannot be used and engineering *incident energy* calculations will be required to perform this energized work.
2. Select the voltage class and equipment to be worked on from *CSA Z462 Table 6A or 6B*.
3. Review the parameters for the *energized electrical work task* related to the voltage class and equipment to be worked on and ensure that you comply with the listed maximum *available fault current* and the maximum fault clearing time listed. A simple method to determine the AC maximum *available fault current* is provided in *Appendix G – Arc Flash & Shock Risk Assessment*

Procedure Form – Table Method or Detailed Label, "look up tables" for maximum *available fault current*. Look up tables are provided for 208VAC to 13.8kV power transformers and power generators. Where the transformer impedance cannot be determined the QEW should use Z = 5.0% which is a common impedance for utility supply power transformers. For smaller panelboard/lighting transformers use Z = 4% impedance if the impedance cannot be verified. Where the generator sub-transient reactance cannot be determined use a X"d = 9% value based on *IEEE recommendations*.

4. Determine the *Arc Flash Boundary* distance from the parameters listed.
5. Determine *Arc Flash PPE Category of Protective Clothing* using *CSA Z462 Table 6A or 6B*.
6. Determine the minimum *arc rating* (e.g. in *ATPV* or E_{BT}) and all of the Protective Clothing for full body protection required using *CSA Z462 Table 6C*. For the *ESP*, *arc-rated* clothing is divided into two Levels, Level 1 and Level 2 as identified in *Section 8.0 Electrical Specific PPE, Tools & Equipment*.
7. Know and apply the working distance to the *work task* as listed in the parameters of *Table 6A or 6B*. The QEW must maintain this distance to the head and torso when completing the *work task*.

The QEW can use the Appendix F – Arc Flash and Shock Risk Assessment Flow Chart – Table Method to assist them in completing Arc Flash and Shock Risk Assessment related to the Arc Flash PPE Category Table Method. The QEW can also fill out the information on the procedural form in Appendix G – Arc Flash and Shock Risk Assessment Form – Table Method or Detailed Label. If the Appendix G form is used and filled out the information can be transferred to the EEJRA form. If the work task requires it, transfer the information from the risk assessment form to Part II of the Appendix J – Energized Electrical Work Permit (EEWP) if the EEJRA is not used as an EEWP.

Note 1: *Confirm that the work task complies with the parameters of CSA Z462 Tables 6A or CSA Z462 Table 6B regarding available maximum available fault current and maximum fault clearing times. Refer to the electrical power system Single Line Diagram to identify voltage sources (e.g. upstream transformers or generators from the work task location) and the protective device upstream of the work task location. Maximum available fault currents can be obtained from the available fault current look up Tables in Appendix G - Arc Flash & Shock Risk Assessment Form – Table Method when assuming an infinite utility bus. Published fault clearing times for typical electrical protective devices based on manufacturer's data and IEEE*

Standards is also provided in Appendix G or refer to the equipment manufacturer's operating and maintenance manuals.

Note 2: *Insulated hand tools are used at all times for energized electrical work when tools are inside the Restricted Approach Boundary for shock.*

Note 3: *As per IEEE 1584 typical Working Distances are 18" for LV MCC's, 24" for LV SWGR, and 36" for MV (e.g. 4160V, 13800V). Use the working distances as listed in the Parameters to CSA Z462 Table 6A or CSA Z462 Table 6B when using the Arc Flash PPE Category Table Method.*

6.6.3.3. Method 3 – Arc Flash PPE Category "Table Method" and Arc-rated Clothing Determined by Policy

Refer to section 3.3.12.

For 120VAC and 240 VAC single phase systems, no arc flash PPE is required for any transformer size. For voltages above this level, follow Method 1 or Method 2 and consult with IEEE 1584-2018.

For three phase systems at 208 VAC and less, with transformer sizes of 30 kVA and less, no arc flash PPE is required. QEWs are to verify assumptions for transformer sizes near 30 kVA to ensure that the 2000 Amp maximum criteria is not exceeded.

For three phase systems at 208 VAC and less, with transformer sizes greater than 30 kVA but less than or equal to 300 kVA, COV Level 1 PPE is required. For transformer sizes near 300 kVA, use Method 2 to verify that Level 1 PPE (8 cal/cm^2) is adequate.

Use Method 1 or Method 2 for any other situations.

6.7. Risk Reduction By Applying Hierarchy of Risk Control Methods

Related to the implementation of the *Risk Assessment Procedure (RAP)*, risk reduction is implemented by applying appropriate controls based on the *hierarchy of risk control methods*. The *hierarchy of risk control methods* are used to prevent or reduce a worker's risk and exposure to electrical hazards. When completing a *risk assessment* as outlined in *Section 6.2.1* the *preventive and protective control measures* outlined in this Section can be used to reduce risk. This includes work practice controls through the use of the *Shock Approach Boundaries*

and the *Arc Flash Boundary*, the application of *Electrical Specific PPE, Tools & Equipment*, and other *preventive and protective controls* (see *Section 6.8 Mitigation of Electrical Hazards*).

6.7.1. Shock Approach Boundaries

Following the completion of a *Shock Risk Assessment* as outlined in *Section 6.5 Shock Risk Assessment* the determined *Shock Approach Boundaries* related to the *work task* shall be applied to ensure Non-Electrical Workers and other workers do not encroach when there are *exposed energized conductors and circuit parts*. A red "*Danger*" tape (with a tag applied) *Electrical Work Zone* shall be established at the *Limited Approach Boundary* or *Arc Flash Boundary* whichever is furthest away from the electrical equipment being worked on.

With respect to High Voltage Overhead Substations, Transmission or Distribution Power Lines the applicable legislated *Limits of Approach* or *Minimum Approach Distances* will apply for personnel or equipment. Refer to BC OHS regulations Part 19. Refer to Appendix I, for an example *Power Line Encroachment Authorization Permit.*

6.7.2. Arc Flash Boundary (AFB)

Where an *arcing fault* and *arc flash hazard* exists related to an *energized electrical work task* because *abnormal equipment conditions* exist, the *Arc Flash Boundary (AFB)* is an approach limit at a distance from the prospective *arcing fault* source within which a person could receive the onset of a 2nd Degree Burn with bare skin in the event of an electrical *arc flash* occurring due to *abnormal conditions*. The *incident energy* level for the onset of a 2nd Degree Burn is 1.2 cal/cm^2 (or approximately 80 deg Celsius skin temperature). When a QEW encroaches inside this distance to perform an *energized electrical work task*, appropriate *Electrical Specific PPE* is required to protect the worker (QEW LV, QEW HV, QEW TQW or AEW) from the *arc flash hazard*.

All City of Vancouver facilities shall ensure that where required, detailed *engineering Incident Energy Analysis* or *Arc Flash PPE Category* analysis related to the *energized electrical work task* of the electrical equipment is completed to determine *Additional Protective Measures* to apply to reduce risk and that *detailed Arc Flash & Shock Equipment Labels* or *Results Table* are applied or supplied for applicable electrical power distribution equipment as required Completed P.Eng. stamped *Engineering Incident Energy Analysis Reports* where completed shall be provided to QEWs for review and use of the *arc flash hazard* data directly from the Results Tables in the P.Eng. stamped report.

Per the CSA Z462 Arc Flash PPE Category Table Method parameters, the Arc Flash Boundary is recorded and applied as provided (CSA Z462, Table 6A or 6B). Engineering calculations will determine the Arc Flash Boundary when Incident Energy Analysis is completed.

6.7.3. Electrical Work Zone

An *Electrical Work Zone* shall be established for *energized electrical work* using an approved red "*Danger*" tape method or other approved method of barricading. When the *Electrical Work Zone* is established the red "*Danger*" tape shall have a tag applied indicating the date, the worker(s) names, and a description of the *work task* being performed, and the date at which the tape is expected to be removed. The *Electrical Work Zone* shall be established at the *Limited Approach Boundary* for *shock* or the *Arc Flash Boundary* whichever is further away. The *Electrical Work Zone* can be established with temporary plastic red "*Danger*" tape, plastic stanchions with retractable red "*Danger*" tape, magnetic or permanently mounted retractable red "*Danger*" tape, other appropriate barricades, electrical room or building doors/walls, or with an *Electrical Standby Person/Safety Watch (ESW)*.

The *Electrical Work Zone* can only be crossed by authorized QEWs or QIW's. Other workers not qualified and authorized must not cross the *Electrical Work Zone* boundary unless accompanied by the authorized QEW or QIW and must be continuously supervised by the QEW or QIW when inside the *Electrical Work Zone*. When other workers are inside the *Electrical Work Zone* they must be wearing the same PPE as the QEW or QIW. Other unqualified workers shall not cross the *Restricted Approach Boundary* for *shock* at any time.

6.7.4. Incident Energy at the Assumed Working Distance

A *detailed Engineering Based Incident Energy Analysis* is used to calculate the *Arc Flash Boundary* and the *incident energy* impressed on the worker (i.e. head and torso) at the *assumed working distance*. It should be noted that the *arc rating* (i.e. *ATPV* or E_{BT}) of protective clothing and *arc-rated faceshield/arc flash suit hood* worn must be at minimum the value of the *incident energy* in cal/cm^2 as calculated.

Alternatively, when using the *CSA Z462 Arc Flash PPE Category Table Method*, the *arc rating* (e.g. *ATPV* or E_{BT}) of the protective clothing worn and *arc-rated faceshield* and *arc-rated balaclava* and *arc flash suit hood* should be at least the minimum *arc rating* of the applicable *Arc Flash PPE Category* as determined in *CSA Z462 Table 6C* for the intended *work task*. This *Electrical Safety Program* stipulates a two *arc-rated* clothing "Level" system please reference

Section 8.0 Electrical Specific PPE, Tools & Equipment or *Appendix L – Electrical Specific PPE, Tools & Equipment Level Tables* for specific information.

6.8. Mitigation of Electrical Hazards

Consistent with *OH&S Management Systems* such as *CSA Z1000*, the *ESP* recommends the following *Hierarchy Of Preventive And Protective Risk Control Methods* to mitigate or reduce risk of exposure to electrical hazards:

- *De-energize*, *isolation* and *LOTO*, establish an "*Electrically Safe Work Condition*";
- *Substitution* with safer systems, processes or materials;
- Engineering "*Safety by Design*" and Equipment "*Safety by Design*" including effective electrical equipment maintenance;
- Maintain critical electrical equipment;
- *Warning/Danger signs and barricading*;
- Administrative controls, *training* and *procedures*;
- *Electrical Specific PPE, Tools & Equipment* with *proper care, use and maintenance*.

The above list of *risk control methods* should be considered on a priority basis in the hierarchy as listed.

6.8.1. De-energizing

A priority and policy of this *ESP* is that when working on *energized electrical equipment* it must be placed in an "*Electrically Safe Work Condition*" before any repair or alteration related *work task* is undertaken. *Energized electrical work* must be justified and authorized and may require the use of an *EEWP*.

Section 7.3 Process for Establishing and Verifying an Electrically Safe Work Condition provides a detailed outline of the requirements that must be undertaken. The established *City of Vancouver lockout program* and its requirements must be met. The requirements of this *ESP* must be followed when de-energizing electrical equipment as this work may involve exposure to *arc flash and shock*.

Only those workers authorized to do so can de-energize electrical equipment, see *Section 3.0 Roles & Responsibilities* of this *ESP*.

6.8.2. Substitution

Consideration should be given to reviewing the application of electrical distribution equipment or work methods that can be used to eliminate exposure of the QEW or QIW to electrical hazards when they must perform *energized electrical work tasks*. Some examples would be the application of arc resistant switchgear, the application of *High Resistance Grounding (HRG)* or arc free equipment, or devices that allow the *work task* to be completed remotely (e.g. remote opening and closing, remote racking in and out, the use of umbilical cords, etc.).

6.8.3. Engineering "Safety by Design"

For Engineering "*Safety by Design*" a detailed *Engineering Based Incident Energy Analysis* can be completed for the electrical equipment. This process also validates the maximum *available fault current* that the existing equipment can withstand it and that interrupting ratings are adequate, as well as the protection and coordination is appropriate. The analysis provides a more definitive calculation of the *Arc Flash Boundary* and *incident energy level* at the *assumed working distance*.

The *incident energy* exposure to workers can be reduced by:

- Reducing the *available fault current level*;
- Reducing the *maximum fault clearing time*;
- Increasing the *working distance* of the worker from the equipment (e.g. extending the length of rack in and out tools to increase the working distance); and/or
- Specifying, ordering and using power circuit breaker remote racking mechanism.

Figure 3 represents the various parameters that impact the magnitude of *arc flash incident energy*:

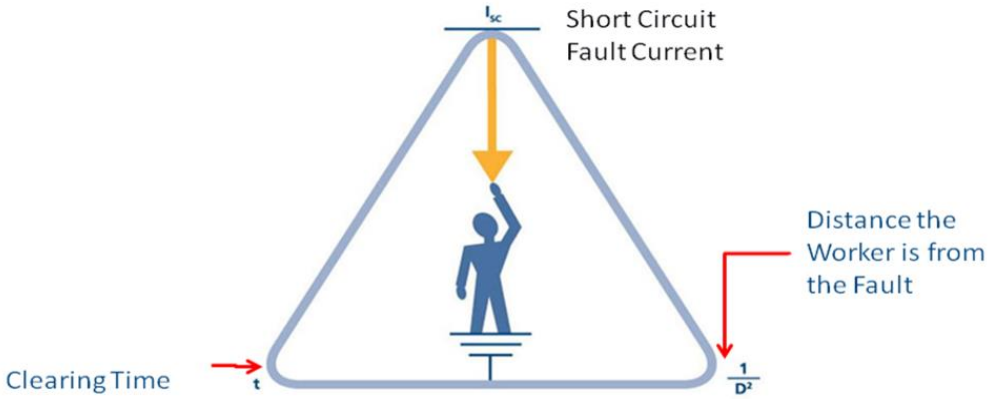

Figure 3 – Parameters that impact the magnitude of Arc Flash Incident Energy

Available Fault level can be reduced by:

- Changing system configuration by selecting and installing multiple smaller kVA transformers;
- Using *current limiting fuses* and *breakers*;
- Using *current limiting reactors*; and/or
- Installing *high resistance grounding* (e.g. NGRs).

Arcing fault clearing time can be reduced by:

- Reducing coordination safety margin of relays and breakers (e.g. sensitivity of settings);
- Using bus differential protection with instantaneous operation;
- Using zone selective interlocking for bus protection;
- Using *maintenance mode* setting function for circuit breakers to provide instantaneous operation (e.g. *Arc Reduction Maintenance Switch (ARMS)*);
- Using an *arc flash detection relay*; and/or
- Improved protective device coordination.

Placing distance between the energized *exposed conductors or circuit parts* and the QEW or QIW greatly reduces the *incident energy* the QEW or QIW would experience. The mitigation approach in this case is through increasing the *working distance*.

Working distance can be increased by:

- Longer operating arm to rack in/out tools for *power circuit breakers and contactors* (must be Engineered – not 'homemade');
- *Remotely controlled breaker* and *contactor operating mechanisms* or use of a *mimic panel* not located in the vicinity of power circuit breakers;
- SCADA; and/or
- Using *remote racking mechanisms*.

See Appendix Q – Summary of Options for Limiting Arc Flash & Shock Hazards for a detailed list of available options. Note that City of Vancouver Engineering Specifications should prescribe that wherever practicable, incident energy levels are to be limited to 40 cal/cm^2 or less by design.

6.8.4. Equipment "Safety by Design"

The following requirements should be considered with respect to defining and implementing enhanced safety features in electrical power distribution equipment design within the *ESP*:

- Electrical equipment and tools are *CSA approved* or equivalently approved and installed and operating to the minimum requirements of the *Canadian Electrical Code (CE Code) Part I*.
- *Energized conductors and circuit parts* of electrical equipment are guarded by approved barriers, cabinets or enclosures.
- Electrical equipment design must ensure that it meets the expected mechanical requirements in such a way that persons, domestic animals and property are not endangered.
- For increased safety, grounded metal safety shutters within equipment cells are used which shield the main contacts from operating personnel when breakers are removed.
- Arc resistant switchgear design and construction allows the front of the equipment to experience no *incident energy* as long as the door is shut and the arc resistance type funnels or re-directs the *incident energy* away from the QEW. The vent plates on the top of the arc resistant switchgear should have a plenum installed with suitable ducting to the outside of the electrical room.

Other considerations for making the electrical equipment safer when electrical workers must interact with it energized or to eliminate the need for exposure are:

- Infrared (IR) windows and ultrasonic ports;
- Additional guarding with insulating barriers permanently or temporarily installed. Fully insulate bus and ensure that high voltage cable terminations or insulated;
- Hinged doors on the back of enclosures;
- Installing handles on bolt-on covers or using suction cup tools to reduce risk of dropping the cover;
- Built-in remote racking in/out motors/devices to power circuit breakers
- Remote open/close mimic panels or control equipment.

See *Appendix Q – Summary of Options for Limiting Arc Flash & Shock Hazards* for a detailed list of options that can be considered. Not all options available will be technically capable of being installed and may be cost-prohibitive.

6.8.5. Electrical Equipment Maintenance

An adequate *electrical equipment maintenance program* ensures equipment health and reliability and also ensures the equipment operates and functions as designed. It further aids in predicting when equipment failure may be imminent so that proactive maintenance can be completed. Equipment maintenance is also a critical factor for the accuracy of *arc flash Incident Energy Analysis* calculations. *Incident energy* levels are dependent on the operating times of protective devices such as fuses, relays and circuit breakers. If the protective device's fault clearing time doesn't correspond with how the protective device actually performs in the field, a dangerous situation may exist as these devices typically act slower and not faster. In some cases, the devices do not operate at all. Lengthening the operating time vastly increases the *incident energy* values, increases the *Arc Flash Boundary* distance, and would require an increase in the *arc rating* of protective clothing required.

Refer to the *City of Vancouver* specific *electrical equipment maintenance program* for details on *electrical equipment maintenance* policy, practices, frequencies of maintenance tests and other requirements. For additional supporting information on how *incident energy* can be negatively impacted refer to *CSA Z462 Annex B Safety-related electrical maintenance*. With respect to establishing a documented *Electrical Equipment Maintenance Program* refer to the manufacturer's manuals, *CSA Z463 Maintenance of electrical systems*, or *NFPA 70B Recommended Practice for Electrical Equipment Maintenance* and the *ANSI/NETA Maintenance Test Specification Standard*.

6.8.6. Warning Signs and Barricading

The application of *Warning Signs and Barricading* is recognized in *Occupational Health & Safety Management systems* as a control measure implemented before administrative controls and PPE. The *Electrical Safety Program* specifically addresses *Arc Flash & Shock related detailed equipment labeling*, electrical equipment labeling and electrical room man-door signage in *Appendix H. Labeling Specification & Schedule for Detailed Arc Flash & Shock Equipment Labels & Signs*. Recommendations are provided on the location on electrical equipment to install *detailed Arc Flash & Shock Warning or Danger labels* to ensure they are visible to the QEW.

Specific to establishing an *Electrical Work Zone* for *energized electrical work*, *Section 7.6* outlines the requirement for barricading to establish the *Electrical Work Zone*. If red "*Danger*" tape is used for barricading it is critical that all workers understand that no one is authorized to

cross the red "*Danger*" tape without permission of the QEW who has established the *Electrical Work Zone*.

6.8.7. Administrative Controls

6.8.7.1. Electrical Safe Operating Procedures (ESWP's)

An *ESWP* is a written step-by-step description of how to perform a *work task* from start to finish. A *Safe Operating Procedure* includes all the necessary appropriate *safe operating practices* and highlights the hazard control requirements. The following guideline is followed to develop *ESWP*'s:

1. Compile a list of all the *energized electrical work tasks* that are performed. Prioritize the list based on the risk and/or complexity related to the *work task*.
2. Assign a small team of QEWs to draft the initial *electrical safe operating procedures* for review by the Supervisor and then other QEWs that will use the *procedures*.
3. Analyze each *work task* to determine the potential hazards. Specifically identify when exposure to the electrical hazards of *arc flash and shock* exists.
4. List the sequential steps required to execute the *work task* from start to finish.
5. List the hazards for each step.
6. Identify all appropriate *safe operating practices* related to each step in the task.
7. Define the hazard control measures associated with every step of the task.
8. Combine the above information into a step-by-step format to develop the *Electrical Safe Operating Procedure (ESWP)*. See example provided in *Appendix X – Electrical Safe Operating Procedure Template*.
9. Review the drafted *ESWP* with knowledgeable and experienced QEWs or QIWs and the City of Vancouver Supervisor.
10. Have the *procedure* approved for use.

The following list of *ESWP's* are recommended for an effective and successful *ESP* for all City of Vancouver Departments/Divisions:

- Opening and closing circuit breaker or disconnect switches;
- High Voltage (e.g. >750VAC) Switching and Isolation;
- Rack in/out LV and HV Power Circuit Breakers;
- Removing and Inserting LV MCC buckets;
- Voltage Testing (TEST-BEFORE-TOUCH);

- Diagnostics and Troubleshooting (e.g. voltage and current measurements);
- Application of *Temporary Protective Grounds* and insertion of *Ground Truck & Test Devices*;
- *Lock-out/Tag-out*; and
- Others as required.

In addition, equipment-specific *ESWP*'s may be implemented as required.

6.8.7.2. Electrical Safety & Technical Training

Training is required for all workers who face a risk of exposure to electrical hazards. If training has not been completed, the worker cannot be considered qualified and competent to perform the *work task*. They must be trained in safety-related work practices and procedural requirements as necessary to provide protection from the electrical hazards associated with their respective job or *work task* assignments. They must also receive *technical training* for the specific electrical equipment on which they work. Qualified persons should be familiar with the proper use of the applicable special precautionary techniques, electrical *policies and procedures*, PPE, insulating and shielding materials, and insulated tools and test equipment. Refer to *Section 9.0 Electrical Safety & Technical Training* for details.

6.8.8. Electrical Specific PPE, Tools & Equipment

All workers must be safeguarded from injury or damage to health due to *electric shock* and *arc flash hazards* by protective equipment rated for the work to be performed. *Electrical Specific PPE, Tools & Equipment* should only be considered as a last line of defense when it comes to mitigating exposure to electrical hazards in the workplace. Refer to *Section 8.0 Electrical Specific PPE, Tools & Equipment* for details, and supporting information tables in the *Appendices*.

6.9. Minimum Arc Flash & Shock Equipment Labeling

Labelling for electrical hazards shall be comprised of the labelling provided by the electrical equipment manufacturer on the electrical equipment as delivered. Additional labelling is applied at the discretion of the City of Vancouver and as outlined in this *ESP*. Minimum *arc flash* labelling for equipment is required by *CSA Z462 Clause 4.3.5.7* and *C22.1 CE Code Part I, Rule 2-306* for Canada.

Labels will be provided for electrical equipment and signage on doors to electrical rooms or fences and gates to high voltage substations.

For third party overhead and underground lines – COV will contact and coordinate with the facility owner.

For COV owned overhead and underground – use existing COV procedures.

6.9.1. 10m Electrical Room Doors

As outlined in Appendix H - Labeling Specification & Schedule for Detailed Arc Flash & Shock Labels & Signs, the outside of access doors for electrical rooms shall be labeled with minimum signage indicating “Danger – Authorized Personnel Only” and “Danger 480 Volts” where the highest voltage of the equipment in the room is indicated on the sign (e.g. 480 Volts). This could be a single sign or two or more independent signs.

6.9.2. Electrical Equipment

As outlined in the *Canadian Electrical Code Part I, Rule 2-306 Shock and arc flash labeling*, all electrical equipment installed after 2006 must have a minimum “*Warning*” label for *arc flash and shock* field applied. It is the responsibility of the employer to install the minimum labeling requirement. Refer to *Appendix H – Labeling Specification & Schedule for Detailed Arc Flash & Shock Labels and Signs* for an example of the minimum label and installation instructions. At minimum one label shall be installed.

7.0 ELECTRICAL SAFE WORK POLICIES & PRACTICES

All electrical equipment should be considered energized until it is proven de-energized (i.e. tested for absence of voltage – "TEST-BEFORE-TOUCH"). *Process for* Establishing an Electrically Safe Work Condition as outlined in *Section 7.3 Establishing and Verifying an Electrically Safe Work Condition* is required. No person shall begin repair or alteration work on de-energized parts until this verification has been completed.

City of Vancouver expects its employees and contractors to follow the minimum *safe operating practices* found in this *ESP* which include:

- De-energizing electrical equipment before working on it (i.e. *Establishing an Electrically Safe Work Condition*).
- Completing a *Risk Assessment Procedure (RAP)* for an assigned *energized electrical work task*.
- Conducting an *Arc Flash and Shock Risk Assessment* for the justified *energized electrical work*.
- Communicating and implementing appropriate training as required to ensure how to complete and interpret the results of *Arc Flash and Shock Risk Assessment* and that appropriate risk control methods are utilized to reduce risk.
- Establishing an *Electrical Work Zone* with red "*Danger*" tagged tape (or other means) that is tagged at the *Arc Flash Boundary* or *Limited Approach Boundary* for *shock* whichever is further away.
- Applying the *Arc Flash Boundary* and *Shock Approach Boundaries* to the *work task*.
- Ensuring *Electrical Specific PPE, Tools & Equipment* that meets *CSA, ASTM,* and other applicable Standards is specified, used, maintained and worn appropriate to the hazard.
- All *electrical incidents* and *near misses* are reported.
- Follow the *Emergency Response Plan* requirements related to an *electrical incident as identified in ESP Section 11*.
- Ensuring effective "*Management Of Change*" of key requirements related to the energized electrical power distribution equipment.

7.1. General Workplace Electrical Safety Requirements & Practices

To perform *energized electrical work tasks*, the following principles as *preventive and protective risk control methods* to protect personnel from electrical hazards shall be followed:

- Plan the work, and then work the plan.
- Do not rush when planning or carrying out the electrical *work task*.
- All *near misses* and *electrical incidents* (e.g. *arc flash and shock*) shall be reported immediately to the Supervisor and Safety. These incidents should be fully investigated, lessons learned recorded, and recommendations communicated and implemented by the Supervisor. Reference ESP Section 10 for specific electrical incidents or near misses that shall be reported. The COV FSR shall report applicable electrical incidents to the COV Inspections Branch as required.
- No worker should begin any electrical work until the worker fully understands the instructions received and in no circumstances, should that person exceed or abstain from following those instructions. Should any person consider that the instructions given cannot be carried out safely, that worker should refer the matter immediately to an appropriate Supervisor.
- No worker should interfere with *temporary protective grounding* or other grounding connections, locks, tags, *danger or warning signs*, safety barriers, flags or other safety devices.
- Stand away from the front and to the side of a circuit breaker or disconnect switch when opening or closing it under *normal operating conditions*.
- Only use tools that are appropriately insulated and approved.
- **Test every circuit, every conductor, every time, before you touch. Use the TEST-BEFORE-TOUCH *procedure*.**
- Fixed or portable Class A GFCIs shall be used for all *portable cord-and-plug-connected electrical equipment* used outdoors, and in process areas indoors and outdoors for 120VAC, 15, 20 or 30 ampere circuits.
- Prior to using *portable cord-and-plug-connected electrical equipment and cord sets (extension cords)*, they shall be visually inspected for damage such as cracked insulation, broken plug, signs of burns etc. All damaged portable electrical equipment and extension cords shall be tagged and removed from service and can be repaired by a QEW or discarded.
- Be aware of the potential for DC *shock* and *arc flash* (e.g. from battery systems or other DC systems).
- All portable ladders used near *energized electrical equipment* must have non-

conductive side rails.

- Conductive articles (e.g. clothing or jewellery) are not permitted to be worn while conducting *energized electrical work*.
- If lighting is not adequate to perform *work tasks* safely, temporary *work task* lighting must be used.
- Adequate workspace must be provided around electrical equipment to conduct *work tasks* safely, as per *CE Code Part I Rule 2-308*.
- There must be sufficient space provided around electrical equipment and work areas for unobstructed access and egress in emergency situations, as per *CE Code Part I Rule 2-310*.
- Temporary power equipment must be installed to minimum safe installation standards, including grounding of temporary generators.
- When performing *energized electrical work*, look-alike equipment must be identified with warning tape to prevent access.
- Non-Electrical Workers may only perform demolition work after the equipment has been de-energized in accordance with this *ESP*.
- Electrical work shall not be performed if the worker is impaired due to illness, fatigue, or other causes.
- If the scope of the *work task* changes, work shall be stopped, *and the Energized Electrical Job Risk Assessment (EEJRA)* will be completed over again and any appropriate changes identified and implemented.
- Appropriate precautions shall be taken if an electrical *work task* is completed in a confined space.
- **During the execution of a *work task*, if any changes are noticed from the planned procedures then immediately stop the task, think and analyze, assess the hazard and risk, mitigate the risk, and then resume work.**
- Appropriate workers shall receive training on *emergency response to electrical incidents* and *emergency release of shock victims*.

7.2. Work Flow Process

7.2.1. Electrical Job Safety Planning & Job Briefing

Before starting each job that involves *energized electrical work*, the QEW worker in charge (e.g. the worker who is assigned the *work task*) shall conduct a Job Safety Plan and a Job Briefing or tailgate meeting with all the workers involved. The Job Briefing or tailgate meeting

shall cover such subjects as hazards associated with the job, *Risk Assessment Procedure (RAP)* completed, *work procedures* involved, resource allocation, special precautions, energy source controls (e.g. for both de-energizing the equipment as well as re-energizing the equipment), and *personal protective equipment (PPE)* requirements. The *work tasks Energized Electrical Job Risk Assessment (EEJRA)* form shall be used to facilitate a *Job Briefing* and outline and document the EEJRA's *Job Safety Plan*. In executing the *energized electrical work* the *Job Safety Plan* will:

1. Be completed and documented by the QEW.
2. Include the following information:
    a. A description of the job and individual *energized electrical work tasks*.
    b. Identification of the electrical hazards associated with each *energized electrical work task*.
    c. A documented Shock Risk Assessment.
    d. A documented Arc Flash Risk Assessment.
    e. Work *procedures* involved, special precautions and confirmation of electrical isolation.

If the work or operations to be performed during the workday or shift are repetitive or similar, at least one *Job Briefing* or tailgate meeting shall be conducted before the start of the first job of the day or shift. Additional Job Briefings or tailgate meetings shall be held if significant changes that might affect the safety of workers occur during the course of the work.

A brief discussion shall be satisfactory if the work involved is routine and if the worker, by virtue of training and experience, can reasonably be expected to recognize and avoid the hazards involved in the job.

7.2.2. Arc Flash & Shock Risk Assessment Form

When *Incident Energy Analysis* has not been completed for an *energized electrical work* and before completing the *work task Appendix G - Arc Flash & Shock Risk Assessment Procedure Form* can be used as a procedure in the pre-job planning phase of executing the *work task* to document the *Arc Flash & Shock Risk Assessment* related to the *work task*. This procedural form can be used to document *additional protective measures* which include both *Approach Boundaries* and *Electrical Specific PPE, Tools & Equipment* required for use when inside the *Approach Boundaries* related to the *energized electrical work task*.

7.2.3. Energized Electrical Job Risk Assessment (EEJRA) Form

Just before commencing the *work task* and when at the *work task* location, *Appendix D Energized Electrical Job Risk Assessment (EEJRA) Form* shall be completed. This will confirm the application of the *Hierarchy of Risk Control Methods* and the *work task* specific *Arc Flash & Shock Risk Assessments*. Completing the *EEJRA* confirms the application of *additional protective measures* to reduce risk. Please refer to the separate document from this *Electrical Safety Program*, the "*Energized Electrical Job Risk Assessment (EEJRA) Instructions for Use*" document for detailed instructions and additional information required when having to complete an *EEJRA*.

7.3. Process for Establishing and Verifying an Electrically Safe Work Condition

When completing a full electrical isolation of electrical equipment an *Electrically Safe Work Condition* is achieved when performed in accordance with the *procedures* of *CSA Z462*, and verified by the following process:

1. Determine all possible sources of electrical supply to the specific equipment. Check applicable up-to-date *Single Line Diagrams* and identification tags.
2. After properly interrupting the load current, open the disconnecting device(s) for each source.
3. Where it is possible, visually verify that all blades of the disconnecting devices are fully open or draw out type circuit breakers are withdrawn to the fully disconnected position.
4. Apply *lock-out/tag-out* devices in accordance with *City of Vancouver Lock-Out Program*/P*rocedures*.
5. Release stored electrical energy.
6. Release or block stored mechanical energy.
7. Use an adequately rated test instrument (e.g. voltage detector) to test each phase conductor or circuit part to verify they are de-energized. Before and after each test, determine that the test instrument is operating satisfactorily. TEST-BEFORE-TOUCH.
    a. On electrical equipment >750VAC the use of a non-contact test instrument is approved for use.
8. Where the possibility of induced voltages or stored electrical energy exists, ground the phase conductors or circuit parts before touching them. Where it could be reasonably anticipated that the conductors or circuit parts being de-energized could contact other *exposed energized conductors or circuit parts*, apply *temporary protective ground* connecting devices (e.g. follow an approved *procedure* for the use and application of *temporary protective grounds* or *Ground Truck Test Devices*) rated for the available fault

duty.

Note: *Shutting off a control interlock or other device is not considered a disconnecting means. Three or four-way switches are not considered as a disconnecting means. Switching off the control switch of a motor is not considered a disconnecting means.*

7.4. Maximum Allowed Working Incident Energy Level

At the discretion of the City of Vancouver *energized electrical work tasks* can be completed up to a 140 cal/cm^2 of *incident energy*.

As identified in *ESP Section 8.0* two *arc-rated* Levels of *arc flash PPE* are specified. At a minimum ESP Level 2 identifies a 40 cal/cm^2 *ATPV or* E_{BT} *arc flash suit*.

When City of Vancouver has formal *Engineering Incident Energy Analysis* completed City of Vancouver should advise the Professional Engineer (P.Eng.) completing the analysis, that the target *incident energy* for mitigation will be 40 cal/cm^2 or less.

7.5. Energized Electrical Work Permit (EEWP) Process

As a priority, it is the policy of City of Vancouver that electrical work is completed in a de-energized state. However, it is recognized that the act of de-energizing may in itself be *energized electrical work*, and that some testing/diagnostic work cannot be completed in a de-energized state. Before electrical work is undertaken at the work-site prior to the execution of the work the QEW(s) may have to complete an *Energized Electrical Work Permit (EEWP)*.

An *Energized Electrical Work Permit* is required when crossing the *Restricted Approach Boundary*; or when the individual interacts with the equipment when *conductors or circuit parts* are not exposed, but an increased *likelihood of injury or damage to health* from an exposure to an *arc flash or shock* exists, including closed equipment.

Before electrical work is undertaken at the work site and when an *EEWP* is required the responsible QEW and other affected worker(s) must complete *Appendix J – Energized Electrical Work Permit (EEWP) form along with the EEJRA* during the *Job Safety Planning* phase of work order execution to fulfill the following requirements, which are consistent with *CSA Z462* and this *ESP*.>> Todd: insert link to Appendix J and Appendix D.

Justification for why the work must be performed in an energized condition include:

1. Demonstrating that de-energizing introduces additional or increased hazards or risk,

2. The *work task* to be performed is infeasible in a de-energized state because of equipment design or operational limitations,
3. When the electrical conductors or circuit parts operate at less than 30VAC to ground, or
4. When the capacity of the source and any overcurrent protection between the energy source and the worker are considered and it is determined that there will be no increased exposure to electrical burns or to explosion due to electric arcs. For example, this may include working downline of electronic power supplies in control panels, or with PLC or DCS equipment.

An EEWP is not required in the following situations when a Qualified Electrical Worker uses approved safe operating practices/procedures and appropriate Electrical Specific PPE, Tools & Equipment:

1. Opening hinged doors energized. The justification is that it is infeasible to turn off the power before you open the hinged door in order to complete an inspection, infrared scan, diagnostics, or troubleshooting (includes voltage measurements or absence-of-voltage measurements).
2. Removing a bolt-on cover energized. The justification is that it is infeasible to turn the power off before you remove the bolt-on cover due to electrical equipment design in order to complete an inspection, infrared scan, diagnostics, or troubleshooting (includes voltage measurements or absence-of-voltage measurements).
3. Testing, trouble shooting, and voltage and current measurements.
4. Thermography, acoustic, or visual inspections if the *Restricted Approach Boundary* for *shock* is not crossed (i.e., for 480V/600V electrical equipment this distance is 12”).
5. Access and egress to an area with *energized electrical equipment* if no electrical work is performed and the *Restricted Approach Boundary* for *shock* is not crossed.
6. General housekeeping and miscellaneous non-electrical *work tasks* if the *Restricted Approach Boundary* for *shock* is not crossed.
7. Racking-in or -out power circuit breakers. Justification is that it is infeasible to rack with the bus de-energized due to equipment design and operational limitations.
8. Installing *temporary protective grounds* on electrical equipment where *absence of voltage* has been verified. Justification is that it is infeasible to perform this task any other way.

Arc Flash and Shock Risk Assessments per Section 6.0 Electrical Risk Assessment Procedure and Risk Control, and other safe operating practices shall be followed.

7.6. Electrical Work Zone

As outlined in *Section 6.6.3 Electrical Work Zone*, the *Electrical Work Zone* shall be established before performing *energized electrical work*. This *Electrical Work Zone* will be created using red "*Danger*" tape and shall include a tag with the date, workers name(s) and description of the *work task* that will be completed. The *Electrical Work Zone* can also be maintained with other forms of barricading including, cones, barriers, isolation due to height, using another worker to restrict access, walls/doors of electrical rooms or buildings, etc. The *Electrical Work Zone* will be established at the *Arc Flash Boundary* or *Limited Approach Boundary* for *shock*, whichever is further away from the *work task* location. At a minimum, the *Electrical Work Zone* should be 10 ft or 3 m to assure adequate work space is provided inside the *Electrical Work Zone*. This 10 ft or 3 m space may be smaller if electrical room walls/doors are used as the barrier and the electrical room is of smaller dimensions than the 10 ft or 3 m.

7.7. Temporary Power Systems

When temporary power distribution systems are required during construction, facility shutdowns, when the normal power system is not available, or while repairs are being made to the normal power system, precautions are to be taken to ensure that the installed temporary power distribution systems do not expose workers to the electrical hazards of *arc flash and shock*.

A *Temporary Power Certificate* shall be completed and submitted to the City of Vancouver FSR for approval for all temporary power systems. The *Temporary Power Certificate* will expire in 12 months from issue and should be uniquely numbered for tracking purposes. The *Temporary Power Certificate* should be tracked in the *Computerized Maintenance Management System (CCMS)* and a PM Scheduled to re-certify the temporary power system with documented inspections when the issued certificate expires. An example of this certificate is shown in *Appendix Y - Temporary Power Certificate*.

At a minimum, the requirements of *Section 76 of the CE Code Part I* shall be met for any temporary power distribution system(s).

Temporary power distribution systems should be kept in service for the shortest time possible. If the installation is in service for greater than 12 months then the entire power distribution system must be re-inspected and re-approved and a new *Temporary Power Certificate* issued.

Where portable power generators are used they shall be installed to the manufacturer's requirements and bonded to ground.

All equipment used in the temporary power distribution system shall be protected by suitable barriers so that vehicles and other construction or maintenance equipment do not damage it and expose workers to *arc flash and shock* hazards.

Temporary power distribution cables shall be protected from damage by ensuring they are routed away from high traffic areas. Where this is not possible, mechanical protection must be provided (e.g. wooden covers, plastic cable troughs, pipe, suspended above ground, etc.). When cables are suspended above ground ensure they are high enough to avoid encroachment by vehicles or other construction equipment or routed where vehicles are not permitted to go. Signalling with tape and flags may be required for cables that are suspended above ground.

All temporary power distribution equipment must be suitably bonded to ground.

Before energizing the temporary power distribution system, the electrical protective devices used shall be checked to ensure that the disconnect switches, circuit breakers, fuses and relays are in good condition and suitably rated for the duty.

When *energized electrical work* is required to be performed on temporary power distribution systems the electrical *risk assessment* requirements of this *ESP* are required to be completed.

7.8. Portable Electrical Equipment & Extension Cord Condition

The following requirements apply to the use of *portable cord-and-plug-connected electrical equipment, and extension cords*:

- Extension cords shall only be used to provide temporary power.
- *Portable cord-and-plug-connected electrical equipment and extension cords* shall be visually inspected before use for external defects such as loose parts, deformed and missing pins, damage to outer jacket or insulation, and for possible internal damage such as pinched or crushed outer jacket. Any defective cord or *portable cord-and-plug-connected electrical equipment* must be removed from service, tagged, and given to a Supervisor and no person may use it until it is repaired and tested to ensure it is safe for use.
- Extension cords must be of the three-wire type. Extension cords and flexible cords must be designed for hard or extra hard usage (for example, Types S, ST, and SO). The rating or approval must be visible.
- Personnel performing *work tasks* using extension cords where work is performed in damp or wet locations shall be provided with and must use a GFCI (e.g. integrated into receptacle or of the portable in line type, Class A required).

- Personnel performing *work using* extension cords shall use a Class A GFCI device on cords and equipment with cords as the best practice. GFCIs are reliable devices that limit fault current and prevent electrocutions. The range of current permitted in a GFCI protected circuit is much below that necessary for an electrocution to occur (e.g. 6 mA for Class A). GFCIs shall be required for all temporary installations and in wet conditions.
- Portable GFCI protection shall be used when fixed GFCI protection (in GFCI receptacles or GFCI panel breakers) is not available. Portable GFCIs shall be inspected and tested before each use.
- Portable electrical equipment must be handled in a manner that will not cause damage. Flexible electric cords connected to equipment may not be used for raising or lowering the equipment.
- Extension cords shall be protected from damage. Sharp corners and projections must be avoided. Flexible cords shall not be run through windows or doors unless protected from damage, and then only on a temporary basis. Flexible cords shall not be run above ceilings, inside or through walls, ceilings or floors, through doors, and may not be fastened with staples or otherwise hung in such a fashion as to damage the outer jacket or insulation.
- Cords must be covered by a suitable cord protector and/or tape when they extend into a walkway or other path of travel to avoid creating a trip hazard.
- Attachment plugs and receptacles may not be connected or altered in any way that would interrupt the continuity of the equipment grounding conductor. Clipping the grounding prong from an electrical plug is prohibited.
- Flexible cords may only be plugged into grounded receptacles. Adapters that interrupt the continuity of the equipment grounding connection must not be used.
- All portable electric equipment and flexible cords used in highly conductive work locations, such as those with water or other conductive liquids, or in places where employees are likely to contact water or conductive liquids, shall be approved for those locations.
- Employee's hands must be dry when plugging and unplugging flexible cords and cord-and-plug-connected electrical equipment if energized equipment is involved.
- If the connection could provide a conducting path to the worker’s hands (for example, if a cord connector is wet from being immersed in water), the energized plug and receptacle connections must be handled only with insulating protective equipment.
- Locking-type connectors must be properly locked into the connector.

- Incandescent lamps for general illumination must be protected from breakage, and metal shell sockets must be grounded.
- Temporary lights must not be suspended by their cords unless they have been designed for this purpose.
- Extension cords are considered to be temporary wiring and must also comply with *Section 7.7 Temporary Power Systems*.

7.9. Operational Readiness Checklist for Energizing & Re-energizing Electrical Equipment

Prior to energizing newly installed power distribution systems, or re-energizing power distribution systems that was made electrically safe for a maintenance *work task*, an operational readiness assessment should be carried out. *Appendix S – Operational Readiness for Energizing or Re-Energizing Checklist* is provided for use.

7.10. Working Near Overhead Power Lines & Buried Power Cables

It is important that workers understand and acknowledge the presence of *overhead power lines* or buried cables when performing work in proximity to *overhead power lines* or excavation work that may put them in contact with energized conductors.

Prior to performing a ground disturbance, it is imperative that checks are conducted to ensure buried facilities such as electrical and data communication cables are clearly identified. Use of cable locators, site drawings, signs and inquiring with other knowledgeable workers reduces the risk of contacting buried cables. All contractors and employees performing ground disturbance activities must follow COV utility locating procedures.

Overhead power lines may present a challenge when work is conducted in close proximity to them. It is critical that workers understand that even when close to the *limits of approach* activities can produce fatal *shock hazards* or potential *arc flashes*. With this understanding, it should be noted that all *overhead power lines* should be considered energized unless otherwise directed by the Electrical Utility. Refer to *Appendix T – Safe Limits of Approach to Overhead Power Lines for Persons and Equipment,* and the applicable WorkSafeBC Regulations regarding acceptable *limits of approach* to *overhead power lines* for personnel or equipment. In general, if the line voltage is unknown, stay away a minimum of 10m and contact the Electrical Utility company for assistance. If an assigned *work task* requires that the work may be performed closer than 10m to an energized *overhead power line* the Electrical Utility shall be contacted and a *City of Vancouver Power Line Encroachment Authorization Permit*

shall be used. An example of this permit is shown in *Appendix I - Power Line Encroachment Authorization Permit*.

7.11. Alerting Techniques

The following alerting techniques are used to warn and protect all persons from hazards that could cause injury or damage to health due to *electric shock*, *arc flash*, or *arc blast*:

- Safety signs, safety symbols, or accident prevention tags are used where necessary to warn employees about electrical hazards that may endanger them.
- An *Electrical Work Zone* will be established with red "*Danger*" tape and tagged.
- Barricades are used in conjunction with safety signs where it is necessary to prevent or limit individual access to work areas where individuals may be exposed to *energized electrical conductors or circuit parts*. Conductive barricades may not be used where they might cause an electrical contact hazard.
- If signs and barricades do not provide sufficient warning and protection from electrical hazards, an *Electrical Safety Standby/Safety Watch* is to be stationed to warn and protect employees and members of the public from entering the area.

7.12. Alertness

Workers shall be instructed to be alert and "on-task" at all times when they are working within the *Limited Approach Boundary* of *energized electrical conductors or circuit parts* operating at 30VAC or more or when within the *Arc Flash Boundary* when an *arc flash hazard* exists.

7.13. Blind Reaching

Workers shall be instructed not to reach blindly into electrical equipment or into areas that might contain *exposed energized conductors or circuit parts* where the potential for an electrical hazard exposure exists.

7.14. Illumination

When *energized electrical work* is justified the QEW shall ensure that the space and equipment where the *work task* will be performed is adequately illuminated such that the *work task* can be performed safely. Any temporary lighting installed with a metal stanchion must be located outside the *Limited Approach Boundary* for *shock* at a distance such that if it is tipped over it would not encroach on the *Limited Approach Boundary*.

7.15. Confined or Enclosed Work Spaces

Where an *energized electrical work task* may be performed in a confined space (e.g. manhole, vault, area with limited or restricted egress) that may contain exposed *energized electrical conductors or circuit parts* operating at 30VAC or more a *City of Vancouver Confined Space Entry Permit* must be executed and all requirements of the *City of Vancouver Confined Space Program* followed. If an *arc flash* and/or *shock hazard* exists, the worker(s) shall use suitable *preventive and protective risk control methods* to reduce risk of exposure. If *portable cord-and-plug-connected electrical equipment* is required to be used it shall be protected by a GFCI

7.16. Housekeeping

Workers shall not perform housekeeping duties inside the *Limited Approach Boundary* where there is a possibility of contact with energized exposed conductors or circuit parts, unless adequate safeguards (e.g. such as insulating equipment or barriers) are provided to prevent contact. Electrically conductive cleaning materials (e.g. steel wool, conductive chemicals, etc.) shall not be used inside the *Limited Approach Boundary* unless *procedures* to prevent electrical contact are followed.

Energized electrical rooms shall be kept clear of any unnecessary equipment or materials to ensure that adequate ingress and egress is provided for all workers and specifically QEWs when they must perform *energized electrical work tasks*. Good housekeeping is required where the *IEEE 1584 Standard's* "*2 Second Guideline*" is used in *Engineering Incident Energy Analysis* to ensure that a QEW exposed to an *arc flash* can leave the area in under 2 seconds.

7.17. Information & Warning Signs for MCC Building Doors or Electrical Distribution Equipment

The requirements of *Appendix H - Labeling Specification & Schedule for Detailed Arc Flash & Shock Labels Signs* apply. Please refer to this *Appendix* for a complete outline of requirements outlined are applied to applicable electrical equipment and MCC/Electrical Room doors.

7.18. Energized Electrical Working Alone Policy

QEWs (e.g. LV, HV or TQW) or QIWs can perform an *energized electrical work task* alone. The minimum requirements of the *City of Vancouver Working Alone Program* shall be followed. Two QEWs may be required depending on the outcome of the *risk assessment*.

Based on industry accepted work practices and specific COV requirements two workers are typically required for:

1. *Switching & Isolation* of high voltage electrical equipment.
2. Racking-in or -out of power circuit breakers, low or high voltage.
3. Installing temporary protective grounds or ground truck and test devices.
4. Performing energized repair & alteration work tasks where an EEWP has been issued.
5. Where Utility Arborists are working within Limits of Approach and specifically at adjusted Limits of Approach, two Utility Arborists or Utility Arborist and an Apprentice Utility Arborist are required with second worker performing the function of "Spotter."
6. Where other COV employees or contractors are working in Limits of Approach two employees are required, the second worker is performing the function of "Spotter."
7. Proximity to HV?
8. Proximity to trolley lines?
9. Aerial work platforms and bucket trucks?

When completing the *Risk Assessment Procedure*, it may be identified that additional QEWs are required to reduce risk.

When two or more QEWs are involved in executing an *energized electrical work task* at least one QEW will perform the *Electrical Safety Watch/Standby Person* role.

An *EEJRA* shall be completed and an *EEWP* may be required. The *EEJRA* will be used for *Job Safety Planning and Job Briefing* requirements.

When working alone is authorized, the worker and Supervisor must establish a means of communication and assistance.

7.19. Look Alike Equipment

Where *energized electrical equipment* has been installed that is of similar size, shape, construction and colour and an *Electrically Safe Work Condition* has been established for the electrical equipment appropriate alerting techniques as identified in *Section 7.11 Alerting Techniques* shall be utilized to ensure that the QEW or QIW doesn't accidently work on the look alike electrical equipment that would still be in an energized state. Appropriate permanent identification shall be added to the front and back of electrical power distribution equipment to avoid human error in incorrectly identifying the wrong equipment that may still be energized.

7.20. Portable Ladders

When using a portable ladder where the worker or ladder might come into contact with exposed *energized electrical conductors or circuit parts* operating at 30VAC or more, a ladder with non-conductive side rails shall be used. Ladders used by QEWs or QIW's shall be constructed with non-conductive side rails. Special precautions would be required where steel scaffolding must be used in proximity to *energized electrical equipment*. Follow the specific requirements of the *City of Vancouver Occupational Health & Safety Management system*.

7.21. No Jewellery Policy

Conductive articles of jewellery and clothing (e.g. such as watch bands, bracelets, rings, keys, chains, necklaces, metalized aprons, cloth with conductive thread, or metal headgear) shall not be worn during the execution of *energized electrical work tasks*.

Eyeglasses with metal frames are not to be worn when inside the *Restricted Approach Boundary for shock*.

Exposed piercings are not to be worn when inside the *Restricted Approach Boundary* for *shock*.

7.22. Temporary Protective Grounding

7.22.1. Requirements

Temporary protective grounds will be applied as required to establish an *Electrical Safe Work Condition* on low or high voltage power distribution equipment. The *Risk Assessment Procedure* completed for a *work task* involving switching and isolation should identify the need to apply *temporary protective grounds* for risk reduction. Properly installed *temporary protective grounds* mitigate the hazard of electrical *shock* and shall be installed for the following reasons: to drain residual stored energy on power distribution equipment and cables, when there is a risk of induced voltages, when static charge can occur on *overhead power lines*, and for worker protection if the circuit is accidentally re-energized. The requirement for and installation of *temporary protective grounds* should be documented in an *electrical safe operating procedure*.

7.22.2. Placement

Temporary protective grounds (TPGs) shall be placed at such locations and arranged in a manner that prevents every worker from being exposed to hazardous differences in electrical potential.

7.22.3. Capacity

Temporary protective grounding equipment shall be capable of conducting the maximum *available fault current* and mechanical forces that could flow at the point of grounding for the time necessary to clear the fault.

7.22.4. Equipment Approval

Temporary protective grounding equipment shall be specified, and constructed to meet the requirements of *CAN/ULC-D61230* or *ASTM F855*.

7.22.5. Impedance

Temporary protective grounding equipment shall have impedance low enough to cause immediate operation of protective devices in case of accidental energizing of the *electrical conductors or circuit parts*.

7.22.6. Ground Truck & Test Devices (GTTD)

Ground truck and test devices (GTTD's) when used must be provided by the power distribution equipment original manufacturer and must be sized to meet the capacity requirements outlined in *Section 7.22.2*. Depending on the manufacturer the *GTTD* may have a fixed connection from the load side to ground. If the *GTTD* as provided by the manufacturer is configurable extreme caution must be taken to ensure that the *GTTD* is never configured incorrectly before it is racked into high voltage switchgear. The *GTTD* should have special tagging and "*Danger*" signage added to it advising what the correct configuration is and that the *Qualified Electrical Worker* must confirm this before applying the *GTTD*.

7.22.7. Recording

When temporary protective grounds are installed they shall be recorded on existing documentation and on the Electrical Safety Program Energized Electrical Job Risk Assessment (EEJRA) form. When the de-energized electrical work task is completed the

temporary protective grounds shall be removed before re-energizing. To assist in facilitating this process and to follow up on other re-energization checks please reference ESP Section 7.8 and you can use Appendix S - Operational Readiness for Energizing or Re-Energizing Checklist.

7.23. Switching & Isolation Requirements

7.23.1. General Requirements

When required for complex switching of low or high voltage power distribution systems in additional to utilizing *procedures* specific "Switching & Isolation Orders" documentation must be created, reviewed and approved before implementing the switching sequence. The Switching & Isolation Orders will require the approval of the Supervisor and FSR.

For *high voltage substations, transmission and distribution lines* owned by City of Vancouver, specific processes must be followed that should be consistent with applicable WorkSafeBC *legislation and referenced associated Standards* that may be specific to the jurisdiction within which the facilities are constructed, operating and maintained. *Switching and isolation orders* for these power distribution systems shall be approved by the City of Vancouver FSR.

City of Vancouver shall review *existing established processes and procedures* and update the documentation to reference applicable content for this *Electrical Safety Program*.

7.23.2. Guarantee of Isolation

For high voltage substations, transmission lines and distribution lines (e.g. *overhead power lines)*, when an *Electrically Safe Work Condition* has been established a "*Guarantee of Isolation (GOI)*" form shall be provided by the authority completing the isolation to the authorized representative of City of Vancouver as the receiver of the *GOI*. This *GOI* document that is signed by both parties acts as the overriding "lockout" related to the completed isolation. Where the *high voltage substation, transmission system or distribution system* is owned by the Electrical Utility the *GOI* will be issued by the Electrical Utility's authorized representative.

When the work that was to be completed on the de-energized electrical power distribution equipment has been completed the receiver of the *GOI* will "return" the *GOI* to the authority that issued it. The *GOI* "return" must be signed off and acknowledged by the authority and the receiver after which the *GOI* documentation will be returned from the receiver to the authority. The authority will then proceed to re-energize the previously isolated equipment.

All related policies, practices and procedures shall be followed. As part of the re-energization process the Appendix S - Operational Readiness for Energizing or Re-Energizing Checklist shall be used.

7.24. Specialized Equipment & Requirements

Specialized electrical equipment and systems are in use at CITY OF VANCOUVER and specific work practices may be required when operating or performing maintenance work on this electrical equipment. This *Electrical Safety Program* and its requirements apply to all specialized electrical equipment and systems that CITY OF VANCOUVER owns, operates and maintains. The following requirements are outlined.

7.24.1. Park Board Department Utility Arborists

The Park Board Department has established policies and practices for Utility Arborists who complete vegetation management. COV Utility Arborists follow established policies and practices that are used by BC Hydro. With respect to Electrical Specific PPE, Tools & Equipment specialized storing requirements and maintenance practices are required.

7.24.2. Engineering Services

Engineering Services workers work in proximity to trolley lines and BC Hydro overhead power lines. Specific Department policies, practices and procedures will be followed to ensure WorkSafeBC Part 19 Electrical Safety “Limits of Approach” and related requirements are followed. A Variance has been approved by WorkSafeBC for training and competency responsibility by COV so the COV worker can work up to the adjusted “Limits of Approach.”

7.24.3. Solar Photovoltaic Power Systems

COV facilities have installed solar photovoltaic power systems in a variety of services. These systems are engineered and installed to the minimum requirements of the Canadian Electrical Code Part I, Section 64. Engineering Services and REFM Electrical are responsible for maintenance requirements.

In addition, manufacturer’s representatives may be required to complete specific maintenance practices. Due to the variety of solar power systems installed DC working voltages will vary and need to be confirmed before any work tasks are completed.

7.24.4. Revenue Metering

Where COV facilities require additional revenue sub-metering, REFM Electrical is responsible for maintenance. Appropriate policies, practice and procedures shall be followed and the requirements of this ESP shall be implemented following the Work Flow Process Flow Chart.

7.24.5. Electrical Vehicle Charging Stations

Where Electrical Vehicle Charging Stations (EVCS's) are owned, installed and operated by the COV, COV Engineering Services and REFM Electrical are responsible for maintenance.

In addition, manufacturer's representatives may be required to complete specific maintenance practices. It is noted that EVCS's that are installed are defined by three Levels: 1, 2 and 3 related the voltage of the system, 208VAC, 480VAC or 600VAC. Specific policies, practices and procedures will be followed when working on the EVCS's in completing diagnostics & troubleshooting work tasks and the requirements of this ESP shall be implemented following the Work Flow Process Flow Chart.

8.0 ELECTRICAL SPECIFIC PPE, TOOLS & EQUIPMENT

This *Electrical Safety Program* provides detailed direction on the requirements for clothing, tools and equipment to protect and safeguard workers from injury or damage to health due to *abnormal electrical equipment conditions* that could lead to exposure to electric *shock* and *arc flash hazards*. This equipment is referred to as *Electrical Specific PPE, Tools & Equipment*.

All *Electrical Specific PPE, Tools & Equipment* shall be of a safe design and constructed for specific part(s) of the body to be protected. It must meet and/or be certified to all applicable Standards including *CSA, ULc, ANSI, IEEE* or *ASTM*. When required it must be suitably marked indicating approval ratings and test dates if applicable.

All City of Vancouver facilities will adopt the arc-rated PPE Level system identified in Appendix L - Electrical Specific PPE, Tools & Equipment Level (Arc-Rated) Tables which is consistent with both the CSA Z462 Table 3 Selection of arc-rated clothing and other PPE for use when incident exposure is determined by an Engineering Incident Energy Analysis and the CSA Z462 Table H.1 Simplified two-category arc-rated clothing system when the Arc Flash PPE Category Table Method is used for Arc Flash Risk Assessment. The requirements for shock hazard related Electrical Specific PPE, Tools & Equipment are determined based on work task requirements and using the rules related to the Shock Approach Boundaries in CSA Z462 Table 1A or 1B (e.g. see Figure 2 - Boundaries for Arc Flash & Shock – Approach Limits).

- **Level 0** - *Minimum Company Standard PPE as required depending on the COV facility*. At a minimum, the QEW, QIW, QOW shall wear 100% natural fibre clothing. Where the COV Department has determined it, QEWs, and QIWs shall wear minimum 8 cal/cm2 clothing for convenience when ESP Level 1 is determined as required by completing an Arc Flash Risk Assessment and Shock Risk Assessment.
- **Level 1** - The recommended everyday wear coverall or shirt/pants combination shall have a minimum *arc rating* of 8 cal/cm^2. The *arc-rated faceshield* and *arc-rated balaclava* must be minimum 8 cal/cm^2 and are used for tasks where calculated *incident energy* is 8 cal/cm^2 or less, or for *Arc Flash PPE Category* 1 and 2 when the *Arc Flash PPE Category Table Method of Arc Flash Risk Assessment* is used.
- **Level 2** – When Engineering Incident Energy Analysis has been completed and the detailed Equipment Label or Results Table indicates incident energy is greater than 8 cal/cm^2, or for Arc Flash PPE Category 3 and 4 work tasks using the Arc Flash PPE Category Table Method, an arc flash suit with recommended minimum ATPV or E_{BT} of

40 cal/cm^2 shall be used. **It is noted that arc flash suits are currently available to a maximum arc rating of 140 cal/cm^2 ATPV or E_{BT}.**

If the detailed arc flash and shock warning label indicates the incident energy at the assumed working distance is greater than the Maximum Allowed Working Incident Energy Level of 40 cal/cm^2, energized electrical work is not authorized.

All *arc-rated* PPE shall have permanent labels that include the following information;

- *Arc Rating* (*ATPV*) or *Arc Rating* (E_{BT});
- Tracking identification code system;
- Meets requirement of Performance Specification *F1506*;
- Manufacturer's name;
- Size and other associated standard labeling; and
- Care instructions and fiber contents.

PPE only needs to be assigned to those workers that are qualified and competent as defined in *Section 3.0 – Roles and Responsibilities* of this *ESP* to use while performing *energized electrical work*. Less commonly used *Electrical Specific PPE, Tools & Equipment* may be provided to workers using shared *Electrical Specific PPE* kits, or at centrally located *Electrical Specific PPE* lockers (See *Appendix L – Electrical Specific PPE, Tools & Equipment Level Tables*). An integral part of the *Electrical Specific PPE, Tools & Equipment* inventory management system would relate to the use of common/shared *Electrical Specific PPE, Tools & Equipment*.

Manufactures' written instructions must be followed for the care, use, and maintenance of *Electrical Specific PPE, Tools & Equipment*. Failure to do so could result in compromising the integrity and safety performance of this specialized PPE. Special attention must be given to following approved laundering instructions.

8.1. Minimum Specification

All available Electrical Specific PPE, Tools & Equipment shall be manufactured to appropriate applicable ANSI or ASTM Standards at a minimum. These are listed in Appendix M – Electrical Specific PPE, Tools & Equipment Specifications and Standards Tables.

Specialized equipment related to the *high voltage power distribution equipment* (e.g. substations, transmission and distribution lines) must meet all applicable industry specifications and approvals (e.g. bucket truck).

8.2. Procurement

Controlled procurement of *Electrical Specific PPE, Tools & Equipment* should be completed to ensure standardization within the company. Approved specifications should be quoted for *Electrical Specific PPE, Tools & Equipment* when it is ordered, and evidence should be provided by the supplier that the requirements of these Standards has been complied with (e.g. *ASTM F1959 Standard for arc-rated clothing* with *arc ratings* provided as an *ATPV* or E_{BT}).

The manufacturer's provided individual storage bag or case can be procured. Additional *arc flash* storage bags can be purchased and used for storing and transporting the PPE to the *work task* location.

Refer to Appendix M Electrical Specific PPE, Tools & Equipment Specifications and Standards Tables for information on requirements and applicable Standards.

8.3. Selection

Only City of Vancouver procured *Electrical Specific PPE, Tools & Equipment* may be used for work tasks performed by City of Vancouver employees at City of Vancouver facilities. Contractors may not use *City of Vancouver PPE* unless specifically authorized to do so.

Based on completing an Arc Flash and Shock Risk Assessment as per Section 6.0 Electrical Risk Assessment Procedure and Risk Control, appropriate Electrical Specific PPE, Tools & Equipment must be selected prior to executing the work task. The Electrical Specific PPE, Tools & Equipment selected must be determined from a detailed Arc Flash and Shock Equipment Label if it is located on the electrical equipment for from a Results Table. If an Engineering based Incident Energy Analysis has not been completed and no Equipment Label is attached to the equipment being worked on, an Arc Flash and Shock Risk Assessment using the CSA Z462 Arc Flash PPE Category Table Method and Table 1A or 1B for Shock Risk Assessment must be completed and the results used prior to starting the task.

Use Appendix F – Arc Flash and Shock Risk Assessment Table Method Flow Chart and Appendix G – Arc Flash & Shock Risk Assessment Procedure Form to document the completion of the arc flash and shock risk assessment. Just before executing the work task complete and sign an EEJRA form. You can reference a Single Line Diagram related to the electrical equipment or sketch a Single Line Diagram to identify voltage and available fault current sources, the work task location, emergency isolation device, and electrical protective device upstream of the work task location.

8.4. Three Level System

To simplify the procurement and management of *Electrical Specific PPE, Tools & Equipment* a three-level system has been provided in this *ESP*. The *Electrical Specific PPE, Tools & Equipment* outlined can be provided as individually issued or shared. Detailed lists are provided in a tabular format in *Appendix L – Electrical Specific PPE, Tools & Equipment Level Tables*. A summary of the levels is provided below.

8.4.1. Level 0 – City of Vancouver Standard PPE

- Minimum 100% cotton or natural fibre under garments.
- Minimum 100% cotton coveralls or shirt and pant ensemble.
- Undergarments shall be made from 100% natural fibre cloth.
- Minimum CSA approved leather safety footwear, Ohm rated.
- CSA Approved Safety Eyewear

8.4.2. Level 1 – Minimum 8 cal/cm^2 ATPV or E_{BT}

- Minimum 8 cal/cm^2 *arc-rated coveralls* or *shirt and pant ensemble*.
- Minimum 8 cal/cm^2 *arc-rated faceshield* with wrap-around protection (face, chin, forehead, ears and neck) c/w *Class E hard hat* or minimum 8 cal/cm^2 *arc-rated hood* with hood ventilation system and LED lamp. All lenses require anti-fog & anti-scratch.
- Minimum 8 cal/cm^2 *arc-rated balaclava* to be worn with *arc-rated faceshield*.
- Class 0 (or other Class # as required) *Rubber Insulating Gloves c/w Leather Protectors* and Storage Bag.
- Glove liners (optional).
- Personal locks, tags, multiple lockout hasps or lock out box.
- UV rated *safety glasses*, clear.
- Minimum *canal insert ear plugs*.
- *Digital multi-meter*, Category III, 600VAC minimum.

8.4.3. Level 2 – Recommended Minimum 40 cal/cm^2 ATPV or E_{BT}

- Recommend minimum 40 cal/cm^2 *arc-rated Arc Flash Suit* (e.g. combination of coat, bib-overalls, hood with ventilation system and LED lamp). The 40 cal/cm^2 body protective (except face, head, hands or feet) *arc rating* can also be achieved by layering following *ASTM F1959 Standard* test report results wearing the exact same system in

the exact same order to achieve a *Total System Arc Rating*. When required *arc flash suits* are available to a maximum *arc rating* of 140 cal/cm^2 *ATPV or* E_{BT}. *Long coat style arc flash suits with leggings* are a protection concern for workers and shall not be used.

Additional Required Electrical Specific PPE, Tools & Equipment:

- Class 0 (or other Class # as required) *Rubber Insulating Gloves c/w Leather Protectors* and Storage Bag. Vinyl storage bag with two pockets is recommended.
  Note*: Rubber Insulating Gloves c/w Leather Protectors provide arc flash protection for the hands.*
- 100% cotton or flame resistant (FR) glove liners can be worn instead of glove talc powder for comfort if needed.
- Personal locks, tags, multiple lockout hasps or lock out box.
- Clear polycarbonate *CSA* certified *safety glasses* with anti-fog & anti-scratch coating.
- Minimum *canal insert ear plugs* with NRR >30 dB. Dual hearing protection (plugs + ear muffs) are superior. User fit tests shall determine the best type of product(s).
- *Digital multi-meter*, Category III, 600VAC minimum.

Other Electrical Specific PPE, Tools & Equipment may include:

- *Temporary Protective Grounds*.
- *Hot sticks* (e.g. telescopic, shotgun, or fixed length).
- Insulated *Rescue Hot stick*(s).
- *Rubber insulating blankets*.
- *High Voltage proximity detector* and voltage source for testing the proximity detector.
- A selection of *insulated hand tools*.
- Fluke PRV-240 *Proving Unit*.
- Fluke *Probe Extenders*.
- Red "*Danger – Keep Out*" ribbon and tags (e.g. temporary plastic tape or retractable style magnetic or floor mounted stanchions).
- *Arc flash suppression blankets*.
- *Arc flash shields* for *shotgun hot sticks*.
- *Fall protection equipment*. When body harnesses are required they shall be worn over personal garment(s) and if necessary under an *arc flash suit*. Procure *arc flash suits* with harness ports to allow for access for d-ring, and/or d-ring extender.
- Other *specialized tools, equipment* and *arc-rated PPE* as required.

8.5. PPE Level and Category Conversion Table

To assist with the selection of PPE, and comparison with various existing and legacy PPE classification systems, Table 3 is provided below to aid in comparing the various PPE systems which may be encountered in the field with the COV Arc-Rated Level System

Table 3: Conversion Table of Hazard Risk Categories/Arc Flash PPE Categories from CSA Z462-2012, -2015, -2018 and Arc Rated PPE Levels -2015, -2018 to COV Arc-Rated Levels

Hazard/risk categorization of protective clothing for personal protective equipment (from CSA Z462-12)	Arc Flash PPE Category (from CSA Z462-15/18) (ATPV or E_{BT})	Arc Rated Clothing Ratings for Incident Energy Analysis (from CSA Z462-15/18) (ATPV or E_{BT})	COV Arc-Rated Level (ATPV or E_{BT}) (Note 1)
HRC 0	Not Applicable	Not Applicable	Level 0 (≤1.2 cal/cm^2)
HRC 1	Category 1 (4 cal/cm²)	"Level 1" Minimum 12 (>1.2 cal/cm^2 to ≤12 cal/cm^2)	Arc-Rated Level 1 Minimum 8 (>1.2 cal/cm^2 to ≤8 cal/cm²)
HRC 2	Category 2 (8 cal/cm²)		
HRC 3	Category 3 (25 cal/cm²)	"Level 2" Greater than 12 (>12 cal/cm^2)	Arc-Rated Level 2 Minimum 40 (>8 cal/cm^2 to ≤40 cal/cm²)
HRC 4	Category 4 (40 cal/cm²)		

Notes:

1. See also *CSA Z462 Annex H Table H.1 for the "Simplified two-category arc-rated clothing system" for use with Tables 6A, 6B, and 6C*. COV Levels 1 and 2 follow this table.
2. 100% natural fibre clothing shall be worn by the Qualified Electrical Worker at all times.

8.6. Inventory Management

An *Electrical Specific PPE, Tools & Equipment* inventory management system shall be established in order to track what *Electrical Specific PPE, Tools & Equipment* has been procured at City of Vancouver facilities, which area within each plant is in possession of what specific *Electrical Specific PPE, Tools & Equipment*, and that required PM's are implemented. Inventory sheet(s) should be included with kit bags or in lockers that can be checked during routine inspections to ensure all *Electrical Specific PPE, Tools & Equipment* are accounted for and available for use.

8.7. Performance Management

The QEW using *Electrical Specific PPE, Tools & Equipment* must ensure that it performs as intended and required when completing the *work task*. If the *Electrical Specific PPE, Tool or Equipment* can cause the worker to be inadvertently exposed to *arc flash* or *shock* or other workplace hazards (e.g. heat exhaustion, oxygen deprivation, etc.) then the worker is responsible to identify this deficiency to their Supervisor.

8.8. Individual vs. Shared

Deployment of the required *Electrical Specific PPE, Tools & Equipment* can be established by individually issuing it or providing it as shared to the workers that require it.

8.8.1. Individual Assignment

Where the worker will be using the *Electrical Specific PPE, Tools & Equipment* frequently consideration will be given to issuing to each individual worker as a personally assigned item. Hygiene should be considered when sharing *PPE*. Examples of individually assigned PPE include *rubber insulating gloves with leather protectors*, *arc-rated balaclavas*, *arc-rated garments* (coveralls, shirts, pants), *arc-rated faceshields*, *hard hats* and *arc-rated hoods*. Two pairs of *rubber insulating gloves with leather protectors* is recommended if one pair is damaged (identified during pre-use inspection) the second pair is available, or the second pair can be used or as a spare when one pair is out for dielectric testing. Where two pairs of *rubber insulating gloves* are available the dielectric testing frequency should be staggered.

8.8.2. Shared & Check In/Out System

Electrical Specific PPE, Tools & Equipment that is used infrequently or that is specialized will be issued as shared, and where required appropriate sizes provided. A common example is an *arc-rated arc flash suit coat*, *arc-rated bib-overall* and *arc flash suit hood*. When shared PPE is inventoried and available for use a simple *check in/out system* (e.g. table on a clip board located at the locker) can be used by the workers that access it to document date, name and what *Electrical Specific PPE, Tools or Equipment* was checked out. Other shared *Electrical Specific PPE, Tools & Equipment* will be high voltage proximity test instruments (e.g. *voltage detector(s)*), *hot sticks*, and *temporary protective grounds*. An example of a *Check In/Out System* form is provided in *Appendix K - Sign-off and Check-in/Check-out Sheets for Personally Assigned and Shared Electrical Specific PPE, Tools & Equipment*.

8.9. Pre-Use Checks

All available *Electrical Specific PPE, Tools & Equipment* used for any *work task* must be checked and inspected prior to starting the *work task*. A list of the recommended inspections and checks is provided in *Appendix O – Recommended Pre-Use Checks for Electrical Specific PPE, Tools & Equipment*. PPE, Tools or Equipment that fails a pre-use check (e.g. is damaged, has not been tested within the required interval, etc.) must not be used for the *work task*, be taken out of service, and tagged. The Supervisor must be informed to take appropriate action with the failed *Electrical Specific PPE, Tools or Equipment* to have it repaired, tested or replaced.

8.10. Care, Use & Maintenance

Electrical Specific PPE, Tools & Equipment shall be maintained in a safe and reliable condition for use. The *Electrical Specific PPE, Tools & Equipment* shall be visually inspected before use.

100% cotton or natural fibre clothing, or *arc-rated* clothing worn that becomes contaminated or damaged to the extent their protective qualities are impaired shall not be used. Where the clothing has been contaminated with excessive amounts of grease, oil, flammable liquids or other hydrocarbon/combustible materials it shall not be used and should be cleaned or discarded.

Follow the minimum requirements of the *arc-rated* clothing manufacturer's instructions for care and maintenance.

Workers should monitor the condition of *arc-rated* clothing that may become worn out due to use or from excessive cleaning cycles. *Arc-rated* garments manufactured using FR treated fabric (i.e. 88% cotton/12% nylon) have a defined wear life. The defined wear life expectancy of any *arc-rated* garment manufactured with FR treated fabric shall not be exceeded.

Refer to Appendix N – Electrical Specific PPE, Tools & Equipment Care, Use and Maintenance for specific information.

8.11. Frequency of Inspection & Testing

Based on Canadian and/or International Standards (see *CSA Z462 Table 4*) or industry accepted best practices, some of the available *Electrical Specific PPE, Tools & Equipment* may require re-certification and testing. A complete listing of re-certification, testing and maintenance requirements are listed in *Appendix P – Electrical Specific PPE, Tools &*

Equipment Frequency of Test Intervals. It is noted that if the *Electrical Specific PPE, Tools & Equipment* are used frequently then the test intervals should be reduced.

9.0 ELECTRICAL SAFETY & TECHNICAL TRAINING

As per *CSA Z462*, *electrical safety training* is required for City of Vancouver workers who face a risk of exposure to electrical hazards including *electric shock*, *arc flash* and associated *arc blast* from contact or equipment failure due to *abnormal conditions*. It is recognized that this type of training may be accomplished in a variety of settings and not all training methods are adequate in all cases or a combination of training methods may provide the knowledge transfer required. *Instructor-led*, *on-the-job training* or *e-Learning based training* might not be appropriate to meet all requirements in some cases, but all of these training methods will allow for necessary training to be successful and provided to workers. Some training may be provided internally by facility or business region through a "Train the Trainer" style of program. QEW, AEW, QOW and NEW specific training is discussed in detail in *Section* 9.1.2 *Training & Competency Requirements by Role*. Retention of Training Records is prescribed in *Section 9.7 Training Records*.

The amount of training and the topics covered should be appropriate for the roles, responsibilities and expected activities of each worker. Refer to *Appendix U – Training and Qualification Matrix* that identifies worker training requirements by role. When training is complete the worker that received the training can be considered qualified, but not competent until validated. An example competency validation process is provided in *Section* 9.9 *Qualified Electrical Worker Electrical Safety Competency Validation Process*. Training would typically have a frequency of a minimum of every three (3) years or could be offered annually as required for refresher purposes or if electrical safety competency is validated with deficiencies, or when new technology or new equipment or changes in *work procedures* occur.

A QEW must also be suitably trained on specific technical requirements related to electrical equipment or control system related equipment, with the proper use of the special precautionary techniques, personal protective equipment, insulating and shielding materials, and insulated and insulating hand tools and test equipment.

Workers should receive training in methods of contact release, including the safe release of victims from contact with exposed *energized electrical conductors or circuit parts*.

Based on *Provincial OH&S Regulations* and company requirements employees and sub-contractors should receive training in first aid and *emergency response procedures.*

9.1. Requirements

9.1.1. Electrical Safety Program Training

Appropriate City of Vancouver facilities personnel shall receive training on electrical safety. The *electrical safety training* received should include *awareness training* on the requirements of this *ESP*.

This training can be *instructor-led*, or o*nline orientation training* and be of a consistent nature for all employees and sub-contractors. This ensures uniformity of awareness and should provide a consistent application of the program. Refresher training to this *ESP* can be provided every three years and may be provided by internal resources that have completed a "*Train the Trainer*" type of program or reviewed in appropriate *Safety Meetings*.

9.1.1.1. Instructor-led

Electrical Safety Program training can be provided in a classroom environment for several workers at one time or on a one to one basis in an office.

9.1.2. Training & Competency Requirements by Role

Section 3.0 Roles and Responsibilities of this *ESP* provides a detailed list of the roles and responsibilities of various personnel. Refer to *Appendix U – Training and Qualifications Matrix* for additional information. In this section, role requirements are described for QEW, AEW, QOW and NEW.

Note 1: *A QEW can be qualified for certain work tasks and in the use of certain equipment and methods and yet be unqualified for other work tasks and in the use of other equipment and methods.*

Note 2: *An AEW, who is undergoing on-the-job training and who, in the course of such training, has demonstrated an ability to perform duties safely at his or her level of training and who is under the direct supervision of a QEW is considered to be a QEW for the performance of those duties.*

Note 3: *When a work task has not been performed by a QEW for more than a year, the QEW must be retrained in the work task before performing it again. Also, as new technologies and safety-related practices are developed, retraining is required.*

9.1.3. Electrical Safety Program Orientation Checklist

The *Appendix R – Electrical Safety Program Orientation Checklist* shall be implemented for all electrical workers (e.g. QEW, QIW and AEW), staff or contractors, to validate qualifications and perform a high-level competency check before the electrical worker is allowed to complete *energized electrical work* on City of Vancouver property. The electrical worker must be deemed as a QEW, Low or High Voltage or both depending on assigned *work tasks* or a Task Qualified Worker (TQW). This orientation checklist shall be renewed annually. Implementation of this process will be a prerequisite to validating competency of electrical workers by the Supervisor. With respect to contractors this checklist could be provided to the Manager/Foreman/Supervisor for the checklist to be completed for all contract workers that would perform *energized electrical work*. Proof of qualifications is required to be provided.

9.2. Training Frequency

As a priority, *electrical safety training* for a QEW should be completed at least every three (3) years. Refresher training may be required on an annual basis or when electrical safety competency has been validated and weaknesses identified.

9.3. Training Matrix

The *Training & Qualifications Matrix* in *Appendix U – Training & Qualification Matrix* can be referred to for confirming training requirements by worker role.

9.4. Train the Trainer (TTT)

Required *on the job training* can be provided by a QEW who has been assigned the responsibility to provide the required technical and electrical safety training in the workplace.

9.5. Instructor-led Training

Workers can be provided the required *technical and electrical safety training* in an *instructor-led course* at the workplace or offsite.

9.6. On the Job Training (OJT)

On the job training can be provided by an assigned trainer that has is competent in the subject matter to be trained.

9.7. E-Learning Based Training

E-Learning based training can be used for *arc flash and shock training*. This type of training can be provided for orientation, qualification, refresher, and when electrical safety competency has been evaluated and retraining is required. Additional *on the job training* may be required for practical hands-on experience and *technical training* on electrical power distribution equipment. Access to a subject matter expert can be provided to answer any questions that may arise while taking the training.

9.8. Training Records

All training records will be stored in COV's SAP Training & Events Management System.

Records shall be kept for all QEW, AEW, QOW and NEW training for a minimum five (5) years. The records should indicate the title of the training received, the training provider company name and/or instructor's name, the participant's name and the date. These certification records and other documentation are made when the worker demonstrates proficiency in the work practices involved and are maintained for the duration of the worker's employment. Employers should verify at least annually that any required worker training is current.

9.9. Qualified Electrical Worker Electrical Safety Competency Validation Process (QEW ES CVP)

It is essential to verify that workers understand, remember, and can correctly apply what they learned from training sessions. Correct interpretation and application of this *ESP* is also required. It is advisable, wherever possible, to make objective assessments of competency. At a minimum, worker competency shall be validated annually, supplemented with occasional spot checking. The following methods may be employed for validation of competency:

- Self-assessment.
- Confirmation that qualification training has been received.
- Knowledge can be assessed by oral interviews.
- Knowledge can be assessed by written test.
- Capabilities, skills, and knowledge of *procedures* can be assessed by task observations or performance tests (e.g. any variations from the correct *procedure* can be noted and corrected when the observation is complete).
- Initiate re-training when training deficiencies are noted (e.g. when *work task* observation shows deficiency or when regulatory changes occur).

Competency of the worker should be assessed by Supervisors, or third-party expert validators.

A QEW can be deemed a validator and become authorized to assist the Supervisor in competency validation.

10.0 ELECTRICAL INCIDENT REPORTING, INVESTIGATION & MANAGEMENT

An *electrical incident* is defined as any of the following:

- Any incident where a person is injured by an *Electrical Shock*, *Arc Flash*, or the associated *Arc Blast*;
- Any incident where electrical equipment fails in a manner that did or could have reasonably been expected to injure a person, damage equipment, or result in production loss;
- A *near miss* for any of the above.

All *near misses* and incidents are to be reported to the Supervisor, and where applicable, the COV Inspections Branch, Serious near misses, injuries and equipment damage must be investigated. Where practicable, evidence should be preserved, and the incident site should be left untouched, except for activity necessitated by rescue work or to prevent further injury or damage to health, until the investigation is carried out. The Supervisor, FSRs and a worker rep from the relevant Joint OHS Committee/or Managers conduct investigations and will submit their reports using Parklane.

Where the electrical incident is reported by the FSR to COV Inspections Branch the TSBC incident reporting form shall be used.

An *Electrical Incident Investigation Form* is provided in *ESP App V*. This form can be used as a tool to capture the details of *electrical incidents* or non-injury incidents ("*near-misses*") that have resulted or could have resulted in a work-related injury and help to prevent similar *incidents* from occurring.

This information can be used to identify underlying causes and contributory factors, then recommend solutions that address these causes and factors. The recommended *corrective actions* may be included in your organization's *corrective/preventive action process* or included in the overall *incident investigation form*.

The COV FSR will use the TSBC electrical incident reporting form and shall submit it to the City of Vancouver Inspections Branch. Based on TSBC requirements *electrical incidents* shall be reported following their requirements.

It is a policy of this *ESP* that:

All electrical shocks, no matter what voltage level shall be reported.

All arcing faults and arc flash events shall be reported.

The steps to be followed for conducting *electrical incident investigation* are as follows:

- Take control of the site to preserve evidence.
- Ensure that injured persons are cared for.
- Ensure that no further injury or damage to health occurs.
- Interview witnesses and obtain written statements.
- Take photographs and collect evidence (where permitted).
- Examine equipment involved.
- *City of Vancouver Enter the Incident Investigation Form* and specific to an *electrical incident* the *Appendix V - Electrical details into Parklane Incident Reporting and then enter complete the investigation in the Parklane Incident Investigation Module*. Information from the *Appendix V* form can be included.
- Analyze all the available information to determine the root causes following an accepted *Root Cause Failure Analysis Process*.
- Determine what corrective action(s) are required to prevent recurrence.
- Complete the report in Parklane Communicate the findings through the *Electrical Safety Steering Committee. The relevant Joint Occupational Safety Committee will review the investigation.* Follow up on all corrective actions.

Any incident suspected to be of electrical origin where a person or equipment is damaged must be reported to the Supervisor. If a worker is injured it must be reported to the Supervisor.

11.0 EMERGENCY RESPONSE TO ELECTRICAL INCIDENTS

All *electrical incidents* must be reported as required by *City of Vancouver OH&S Management System Policy* and this *ESP*. In an emergency response situation follow the relevant facility *Emergency Response Program*.

Listed below is a specific electrical emergency response procedure:

- Evacuate away from the area where the *electrical incident* occurred, assess the situation and ensure there are no continuing hazards to yourself or others.
- Sound the alarm, alert other personnel.
- Call for help, notify the Supervisor and call for immediate medical help (e.g. BC Ambulance, Fire Department, or Police. Call 911).
- Assess the hazards don't rush in to initiate rescue. Only complete an *electrical incident rescue* if you are authorized and competent to complete the rescue safely.
- Secure the area, treat all electrical equipment as energized. If possible, turn off the electrical power supply if you are authorized to (e.g. for High Voltage power distribution equipment >750V you may not be authorized and/or competent to operate the isolation device), isolate and lock out the electrical source following established *electrical safe operating procedures*.
- If you cannot turn the power off, then assess if you can safely rescue using a *hot stick* or *rescue hot stick*?
- If a *hot stick* is not available, are rubber insulating gloves available?
- Initiate rescue, when it is confirmed safe to do so, rescue the victim.
- When the victim has been removed to a safe area begin first aid if properly trained. If the person is unconscious or breathing is erratic monitor closely. If breathing stops apply artificial respiration immediately.
- Don't leave the victim unattended.
- If burned do not touch the victim's affected area or apply any lotions or gauzes.
- Confirm emergency services have been dispatched.
- Follow up, ensure government/regulatory agencies have been notified as required.
- Complete an *incident report*.

Workers exposed to electrical hazards are to be trained in *methods of release* of victims from contact with exposed *energized electrical conductors or circuit parts*. This may include *emergency isolation procedures* and the use of a *Hot Stick* or specific *Rescue Hot Stick*..

If an *Electrical Safety Watch/Standby Person* is required, they should have available an approved fire extinguisher for electrical fires, radio or access to a phone for communication, flashlight and an approved tool or *PPE* to safely release a *shock* victim. If emergency lighting is installed it must be checked to ensure it is functional.

Only those workers authorized to do so should undertake *electrical emergency response rescue*. If a worker is unsure of what to do, they shall wait until the authorized worker arrives at the scene.

Never attempt to rescue a victim of an electrical incident without de-energizing the electrical system first or suitably protecting the person that would attempt to rescue the victim!

11.1. Methods of Release

Approved *methods of release* must be utilized by the authorized worker completing the rescue, the three methods available are:

A. Turn off the power by identifying the isolation device and opening it;

B. Rescue the victim using a *hot stick* (e.g. *rescue hot stick*, shotgun style, fixed length or telescopic);

C. Use rubber insulating gloves and ensure that the rescuers' body doesn't make contact with the victim, only the hands.

Note: *Other methods such as using wood, running tackle or throwing an object at the victim are not approved for use; they may expose the rescuer or the victim to additional hazards.*

11.2. Emergency Response for Emergency Responders

The risk of exposure to electrical hazards to emergency responders must be eliminated before rescue is attempted. *Section 11.1 Methods of Release* above identifies approved methods that authorized workers can use to rescue a *shock* victim when they are working on electrical power distribution equipment.

When an *Overhead Power Line or Buried Cable* incident has occurred no emergency responder will take action to rescue until the Electrical Utility has advised that the power has been turned off. The rescuer must stay back at least 10 metres or 30 feet and advise anyone remaining in a vehicle that has made contact with an energized *Overhead Power Line or Buried Cable* to remain calm and remain in their vehicle. If the vehicle catches on fire the rescuer can provide instructions to anyone in the vehicle to get out the vehicle without making contact with the vehicle and the ground at the same time. After the person exits the vehicle they should be

instructed to shuffle or hop keeping their feet as close together as possible until they are at least 10 metres or 30 feet away from the vehicle.

11.3. Post Fault Re-Energization Procedure

Following any *electrical incident* and if applicable, the *City of Vancouver Post Fault Re-Energization Procedure* must be followed after any damage has been assessed, repaired and before the impacted equipment returned to regular service.

12.0 AUDIT & CORRECTIVE ACTION PLANS

12.1. Requirement

Auditing is a critical component for continuous improvement related to this *ESP*.

It is a requirement of the *ESP* to have periodic (e.g. annual at a minimum) internal or external audits completed to verify compliance. It allows for the identification of strengths and opportunities for improvement (e.g. corrective actions) in the implementation of the *ESP*. Refer to *Appendix W – Electrical Safety Program Audit* for a table of questions that can be used in implementing an *Internal Electrical Safety Audit*. Questions can be added to this list.

An Electrical Safety Audit is comprised of onsite interviews/discussions and observations (e.g. both facility inspections and *work task* observations (if they can be scheduled)), a review of any existing *ESP* documentation and supporting documentation such as *Electrical Safe Operating Procedures* (or other supporting documents) and inspecting all *Electrical Specific PPE, Tools & Equipment* used. The context of an *Electrical Safety Audit* is to assess the proper and effective use of *De-Energizing*, *Substitution*, *Engineering* "*Safety by Design*," Equipment "*Safety by Design*," *Electrical Equipment Maintenance*, *Use of Warning Signs/Barricades*, *Electrical Safe Operating Procedures*, *Electrical Safety & Technical Training*, and *Electrical Specific PPE, Tools & Equipment* as it pertains to managing electrical hazards and mitigating and minimizing *arc flash and shock* exposure to workers when *energized electrical work* is justified. Compliance with this *ESP* and consistency with *CSA Z462*, other applicable Standards and *industry accepted best practices* are measured.

The results of all *audits* must include recommendations for prioritized corrective actions that should be made in the implementation of this *ESP*, related documents, processes, programs, or for recommendations for modifications to this *ESP*, or both.

In addition to *external and internal audits*, it is recommended that *peer-to-peer audits* be conducted. This can conveniently be facilitated during scheduled regional management or safety meetings by including walkthrough observations/inspections at the host facility as a standing meeting agenda item. Individual *peer-to-peer audits* or *competency validation* can also be implemented.

12.2. Supervisory Level

Supervisors should complete scheduled and random audits of workers completing *energized electrical work tasks*. This Supervisory level audit can include a review of electrical *risk*

assessment documentation (e.g. random review of completed *EEJRA* forms) to ensure that it has been completed and the information is utilized in executing the *energized electrical work task*. The Supervisor can and should check the condition and that pre-use inspections and checks are being completed for *Electrical Specific PPE, Tools and Equipment*. The Supervisor can complete a detailed Audit by using the *Appendix W – Electrical Safety Program Audit* table of questions.

12.3. Internal Audit (e.g. document, simple, detailed)

An annual I*nternal Electrical Safety Audit* must be completed using the table of questions in *Appendix W – Electrical Safety Program Audit*. This internal audit can be completed by the Supervisor or assigned to a team of QEWs or QIW's for completion. The internal audit can also be completed by the *ESP Manager* or a team consisting of the *ESP Manager or Coordinator*, Supervisor, FSR, safety resource and QEWs. The implementation of the completion of the questions can also be delegated to a designated team of QEWs for completion and reporting back to the Supervisor. Where multiple facilities are involved in the I*nternal Electrical Safety Audit* a random selection of a representative sample of the facilities shall be made. Future *Internal Electrical Safety Audits* should ensure that facilities are rotated through the annual process.

Results of the internal audit will be shared with all workers. Prioritized corrective actions will be implemented following completion of the audit; this may include retraining of workers.

12.4. External Audit (e.g. documentation, simple, detailed)

An *external audit* can be completed every three years, hiring an independent third-party auditor to complete the audit. The *external auditor* should be an *electrical safety expert*, who will complete the external audit by following industry established *Occupational Health & Safety Audit requirements*. This will include interviewing Management, Supervision, FSR's, QEWs, QIW's, QOWs, and other applicable workers, a review of documentation, completing electrical power distribution system inspections and/or observing *energized electrical work tasks* while they are executed, and inspection of *Electrical Specific PPE, Tools & Equipment*.

An external audit report will be received and the findings and recommended corrective actions prioritized and implemented.

Results of an external audit will be shared with all workers.

12.5. Individual QEW Electrical Safety Competency Validation Process

An individual worker competency validation process can be implemented as outlined in Section 9.9 Qualified Electrical Worker Electrical Safety Competency Validation Process.

13.0 CONTRACTOR MANAGEMENT

Contractors shall be competent to undertake the *work tasks* for which they are contracted. The contractor's workers shall meet the requirements listed in *Appendix U – Training & Qualification Matrix*.

The Supervisor or an authorized QEW shall:

- Ensure all Electrical & Instrumentation contractors are provided with worksite safety orientations.
- Notify the contractor if any of the contractor's employees are witnessed violating the provisions of this *ESP*.
- Ensure that contractors are made aware of hazards related to the work they are performing.
- Identify and provide all information necessary to perform an *electrical risk assessment* for both *shock* and *arc flash* as outlined in this *ESP*.
- Ensure that electrical contract workers that will perform *energized electrical work* are assessed using the *Appendix R – Electrical Safety Program Orientation Checklist or equivalent.*

Contractors also have several responsibilities. These include, but may not be limited to the following:

- Ensure that employees are qualified and competent for the low or high voltage *work tasks* that will be assigned to them.
- Ensure their employees are trained and understand how to assess electrical hazards, apply *appropriate risk control methods*, and the applicable provisions and *procedures* provided to them.
- Must supply their own *Electrical Specific PPE, Tools & Equipment* unless specifically authorized to make use of *City of Vancouver's PPE Tools & Equipment*.

14.0 MANAGEMENT OF CHANGE

The function of *Management Of Change (MOC)* is to be a process to ensure that changes are controlled, evaluated, and approved to minimize risk.

The following are requirements that should be considered with respect to defining and implementing the *Management Of Change* within the *ESP*:

- Ensure that all changes to *Electrical Safety Program* and related documentation are approved using the *Management Of Change* process.
- Ensure that all changes to the *Power System Model* are approved using the *Management Of Change* process.
- Ensure that all electrical protective device setting changes are approved using the *Management Of Change* process.
- Ensure that all changes to *Single Line Diagrams* are approved using the *Management Of Change* process.
- Ensure that all *temporary power generation* requests >5kW, are approved using the *Management Of Change* process directly or be associated with a related *Management Of Change* request.
- Ensure all new engineering projects and engineering changes to existing facilities, equipment and processes are reviewed to identify and control *shock* and *arc flash hazards* using "*Safety by Design*" principles.
- When auditing Arc *Flash and Shock Warning Equipment Labels* or *Results Tables* ensure if updating is required that an approved *Management Of Change* process if followed.
- When *Electrical Safe Operating Procedures* are created for use or modified.
- Review all *relevant applicable legislation, codes and industry standards* to ensure compliance when changes occur or at least every three years and that the *Electrical Safety Program* is up to date.

All *Management Of Change* processes are to be documented, approved and records are to be maintained for future review. Refer to *City of Vancouver Management Of Change Process*. A *Management Of Change* request form is included in *Appendix Z* that can be used for electrical safety specific *Management Of Change* requests.

At a minimum, any changes related to the *ESP* and electrical power distribution equipment must be approved by the Supervisor and FSR. The *ESP Manager* must approve any changes to the *ESP*.

15.0 MANAGEMENT OF DOCUMENTATION

Safety program management is a dynamic and constantly evolving process. Records must be kept providing ready reference of program activities and results. Records provide the information necessary to assess the program, make necessary modifications, plan for future activities, and demonstrate due diligence.

Safety related reports kept on file shall be stored so that they are readily available. Documents should be retained for a minimum of five (5) years or per Vanrims Standards, whichever is longer.

City of Vancouver enterprise documentation retention requirements shall be followed. Vandocs is the official repository for documentation.

All forms, documentation or reports shall be neat and readable, completely filled out and signed/dated by the appropriate personnel. Diligent revision control must be followed.

Managers, Supervisors, HSE and Engineering must keep the following on file:

- *Electrical Safety Steering Committee (ESSC)* Meeting minutes
- Records of training of workers
- *Engineering Incident Energy Analysis (EIEA)* reports authenticated by a Professional Engineer (P.Eng.) and software digital files and custom library files.
- *Arc Flash and Shock Risk Assessment (AFSRA)* Forms if used
- E*nergized Electrical Job Risk Assessment (EEJRA)* Forms
- *Energized Electrical Work Permit (EEWP)* Forms
- *Temporary Power Certificates (TPC)*
- *Power Line Encroachment Authorization Permits (PLEAP)*
- *Management Of Change (MOC)* documentation

Safety Specialists & OHS Managers must keep the following on file:

- *Incident Investigation Forms*
- *Electrical Safety Program Audit Reports* (Internal or External)

Critical electrical system documentation must also be diligently managed. Electrical system *Single Line Diagrams*, *schematics*, *grounding system drawings*, *panel schedules*, etc., must be accurate and updated annually at a minimum. *Switching drawings* and *Single Line Diagrams* should be posted (e.g. *High Voltage Single Line Diagrams* are legally required to be posted as per *CE Code Part I, Rule 36-006*) and readily available in all electrical rooms. *Low voltage Single Line Diagrams* are recommended to be posted or located in electrical rooms, especially

low voltage switchgear that can be referenced for *switching and isolation*. Changes to critical electrical drawings and documents must follow the *Management Of Change* process.

APPENDIX A. DEFINITIONS, ACRONYMS and URLs

This list of acronyms, definitions and URLs supplements those already provided in the *Electrical Safety Program (ESP)*; notwithstanding some duplication that may be provided for convenience. In the event of conflict between this *Appendix* and the *ESP*, the explanation provided in the *ESP* shall govern.

Acronyms:

AED – Automated external defibrillator

AEW – Associate Electrical Worker

AFB – Arc Flash Boundary

AFCI – Arc Fault Circuit Interrupter

AFRA – Arc Flash Risk Assessment

AIHA – American Industrial Hygiene Association

ANSI – American National Standards Institute

AR – Arc Rating

ASSE – American Society of Safety Engineers

ASTM – American Society for Testing & Materials

ATPV – Arc Thermal Performance Value

CANOSH – Canada's National OH&S Website

CB – Circuit Breaker

CCOHS – Canadian Centre for Occupational Health and Safety

CEC – Canadian Electric Code, Part 1, C22.1

CSA – Canadian Standards Association

CSA Z462 – Workplace electrical safety Standard

CSA Z460 – Control of hazardous energy - Lockout and other methods

CSA Z463 – Guideline on maintenance of electrical systems

CSA Z1000 – Occupational Health & Safety Management

CSA Z1001 – Occupational health and safety training

CSA Z1002 – Occupational health and safety - Hazard identification and elimination and risk assessment and control

CSSE – Canadian Society of Safety Engineering

Danatec – Danatec Educational Services Ltd.

E – Incident Energy, cal/cm^2

E_B – Incident Energy at the distance of the Arc Flash Boundary, J/cm^2

E_{MA} – Incident Energy, maximum open arc, cal/cm^2

E_{MB} – Incident Energy, maximum 508 mm (20 in) cubic box, cal/cm^2

E_n – Incident Energy, normalized for time and distance, J/cm^2

EEJRA – Energized Electrical Job Risk Assessment

EEWP – Energized Electrical Work Permit

ESP – Electrical Safety Program

ESTS – Electrical Safety Training System

ESW – Electrical Safety Watch / Standby Person

ESWP – Electrical Safe Work Procedure

E_{BT} – Break-open Threshold Energy

ESFI – Electrical Safety Foundation International

FR – Flame Resistant

FRP – Fiberglass Reinforced Plastic

GFCI – Ground Fault Circuit Interrupter

HV – High Voltage (above 750 Volts for Canada, above 1,000 Volts for USA)

HSE – Health, Safety and Environment

HTA – Hazard Task Assessment

IEC – International Electrotechnical Commission

IEEE – Institute of Electrical and Electronics Engineers

ISHM – Institute for Safety and Health Management

ISO – International Organization for Standardization

JHA – Job Hazard Analysis

JSA – Job Safety Analysis

LV – Low Voltage (750 Volts and below for Canada, 1,000 Volts for USA)

MCC – Motor Control Center

MOC – Management of Change

NETA – InterNational Electrical Testing Association

NEW – Non Electrical Worker

NFPA – National Fire Protection Association

NSMS – National Safety Management Society

OSHA – Occupational Safety and Health Administration

PDCA – Plan-Do-Check-Act

PDC – Power Distribution Centres

PDE – Power Distribution Equipment

PLEAP – Power Line Encroachment Authorization Permit

PPE – Personal Protective Equipment

QEW – Qualified Electrical Worker

QIW – Qualified Instrumentation Worker

QOW – Qualified Operations Worker

SWGR – Switchgear

SLD – Single Line Diagram or 1-Line Diagram

SS – Substation

TPC – Temporary Power Certificate

TPG – Temporary Protective Ground

TQW – Task Qualified Worker

UL – Underwriters Laboratories

WHA – Worksite Hazard Assessment

Definitions:

Acceptable - Acceptable to the authority enforcing the *Canadian Electric Code (CEC) or National Electrical Code (NEC)*.

Adequate Risk Reduction: Achievement of a risk level unlikely to give rise to a situation that could harm personnel.

Approved: Acceptable to the authority having jurisdiction.

Approved Electrical Test Equipment: Is tested and certified to the applicable UL standards and must bear a *CSA* label, *ULc* label or a label of a certification testing body accredited by the Province, Territory or *Standards Council of Canada*.

Arc Fault Circuit Interrupter (AFCI): A special circuit breaker that can be found in residential homes designed to detect low voltage low current arcs in wiring in order to prevent the ignition of a fire. An AFCI recognizes characteristics unique to arcing faults and functions to de-energize the circuit when an arc fault is detected.

Arcing Fault Current - A fault current flowing through an electrical arc plasma, also called arc fault current and arc current.

Arc Flash Hazard: A source of possible injury or damage to health associated with the release of energy caused by an electric arc.

***Note**: The likelihood of occurrence of an arc flash incident increases when energized electrical conductors or circuit parts are exposed or are within equipment in a guarded or enclosed condition, if a person is interacting with the equipment in a manner that could cause an electric arc. An arc flash incident is not likely to occur under normal operating conditions, when enclosed energized equipment that has been properly installed and maintained.*

Arc Flash Risk Assessment (AFRA): A unique risk assessment process that identifies if a work task will expose a QEW or a QIW to an *Arc Flash Hazard*. The *Risk Assessment Process* requires the *Arc Flash Hazard* to be identified, an estimate to the l*ikelihood of occurrence* of *injury or damage to health* and the potential severity of *injury or damage to health*. Determines if additional protective measures are required, including the use of PPE.

Arc Flash Boundary (AFB): When an arc flash hazard exists, an approach limit from an arc source at which incident energy equals 1.2 cal/cm^2 (5 J/cm^2).

***Note**: According to the Stoll skin burn injury model, the onset of a second degree burn on unprotected skin is likely to occur at an exposure of 1.2 cal/cm^2 (5 J/cm^2) for one second.*

Arc Flash PPE Category: A method of completing an arc flash risk assessment that uses electrical equipment type, voltage, and energized work task descriptions with an associated maximum short circuit current and maximum fault clearing time to determine arc flash protective clothing

requirements. In using this arc flash risk assessment method the user must comply with all notes in the body of *CSA Z462* and the notes associated with the Tables provided as well as the Parameters listed. Arc flash protective clothing CANNOT be specified by an *Arc Flash PPE Category* value unless the *Arc Flash PPE Category* "Table Method" of *arc flash risk assessment* was used in determining what arc flash protective clothing is required. The *Arc Flash Boundary* is provided directly by using the Tables (e.g. *CSA Z462 Table 4B and 4C* or calculations must be used.

Arc Flash Suit: A complete arc-rated clothing system that covers the entire body except for the hands and feet. It includes pants, a jacket, and a bee-keeper-type hood fitted with a faceshield. It is recommended that the hood includes an integral cooling fan.

Arc Rating (AR): The value attributed to materials that describes their performance on exposure to an electrical arc discharge. The arc rating is expressed in cal/cm^2 or joules/cm^2 and is derived from the determined value of the *Arc Thermal Performance Value (ATPV)* or *energy of breakopen threshold (E_{BT})* (if a material system exhibits a breakopen response below the *ATPV* value).

***Note**: "Breakopen is a material response evidenced by the formation of one or more holes in the innermost layer of flame-resistant material that can allow flame to pass through the material.*

Arc Resistant Switchgear: Switchgear designed and built to provide maximum safety in the event of an Internal Arcing Fault. Designed to withstand the high pressure explosion of an electric arc event and provide a high degree of protection to personal in the vicinity of the switchgear.

- Type **A** – arc-resistant construction is required at the front only.
- Type **B** – arc-resistant construction is required on the front, back and sides of the switchgear enclosure.
- Type **C** – arc-resistant construction is required between the compartments of the same cell or adjacent cell, in addition to the front, back and sides of the switchgear enclosure.
- Type **C+** – a fault in the bus compartment is not allowed to break into the adjacent bus compartments.

IEEE C37.20.7 standard definition: Equipment designed to withstand the effects of an internal arcing fault as indicated by successfully meeting the test requirements of *IEEE Std C37.20.7-2007*.

- Type 1 – Switchgear with arc-resistant designs or features at the freely accessible front of the equipment only.
- Type 2 – Switchgear with arc-resistant designs or features at the freely accessible exterior (front, back, and sides) of the equipment only.

Arc Thermal Performance Value (ATPV): Defined in *ASTM F1959* as the incident energy on a material or a multilayer system of materials that results in 50% likelihood that sufficient heat transfer

through the tested specimen is predicted to cause the onset of a second degree skin burn injury based on the Stoll curve.

Authority Having Jurisdiction: An organization, office, or individual responsible for enforcing regulations or the requirements of a code or Standard, or for approving equipment, materials, an installation, or a procedure.

Balaclava (sock hood): An arc-rated flame-resistant hood that protects the neck and head, except for the area of the eyes and nose.

Barricade: A physical obstruction, (e.g., tape, cones, or an A-frame-type wood or metal structure) intended to provide a warning about and to limit access to a hazardous area.

Barrier: A physical obstruction that is intended to prevent contact with equipment or energized electrical conductors and circuit parts, or to prevent unauthorized access to a work area.

Bolted Fault Current: A short circuit or electrical contact between two conductors at different potentials in which the impedance or resistance between the conductors is essentially zero.

Blind Reaching: Placing a body part, usually a hand or finger, into an area that is not directly visible or not visible due to inadequate lighting.

Breakopen: In electric arc testing, a material response evidenced by the formation of one or more holes in the material which may allow thermal energy to pass through the material. Breakopen is defined as a hole with an area of 0.5 in^2 or an opening with a 1.0 in dimension in any direction.

Breakopen Threshold Energy (E_{BT}): The incident energy on a material or material system that results in a 50% likelihood of breakopen. When *ATPV* ratings cannot be used due to fabric breakopen, the E_{BT} rating is applied. E_{BT} is defined in *ASTM F 1959* standard and consists of the average of the five highest incident energy levels that did not generate a second degree burn exposure level (1.2 cal/cm^2), and did not cause fabric to breakopen.

Circuit Breaker (CB): A device designed to open and close a circuit by non-automatic means and to open the circuit automatically on a predetermined overcurrent without damage to itself when properly applied within its ratings.

Competent Worker: Based on validation a worker who has suitable qualifications, training, knowledge, and experience to undertake specific work tasks.

Conductor: A wire, cable, or other form of metal installed for the purpose of conveying electric current from one piece of electrical equipment to another or to ground.

Coordination (selective): Localization of an overcurrent condition to restrict outages to the circuit or equipment affected, accomplished by the choice of overcurrent protective devices and their ratings or settings.

Curable Burn: Burn whereby skin tissue is damaged (1st and 2nd degree burns) but not destroyed (3rd degree burn or worse).

Curable Burn Distance: The minimum (closest) distance from an electric arc source at which bare skin is subject to receive a curable burn.

Current-limiting Overcurrent Protective Device: Device that, when interrupting currents in its current-limiting range, reduces the current flowing in the faulted circuit to a magnitude substantially less than that which would be obtainable in the same circuit if the device were replaced with a solid conductor having comparable impedance.

De-energized: Free from any electrical connection to a source of potential difference and from electrical charge; not having a potential different from that of the earth.

Direct Supervision: Means that a "Qualified person" is working with the 'trainee' in the same location and is available for direct communication, not by remote means.

Disconnecting Means: A device, group of devices or other means by which the conductors of a circuit can be disconnected from their supply source.

Due Diligence: Is the level of judgement, care, prudence, determination, and activity that a person would reasonably be expected to do under particular circumstances. Due diligence is as much a culture and way of doing business as it is a legal defence. Three factors that would be considered in judging if due diligence has been exhibited would be: Foreseeability, Preventability and Control.

Electrical Safety Program (ESP): A subset of an overall safety program, ideally tailored to address the specific issues in a particular workplace and components of which can include policies and procedures, site assessment, task assessment, PPE requirements, hazardous boundaries, electrical hazard risk assessment, administration, lockout/tagout, training, auditing and recordkeeping and budgeting.

Electrical Hazard: A dangerous condition such that contact or equipment failure can result in electric shock, arc flash burn, thermal burn, or arc blast injury.

Note*: Power supplies approved as extra-low voltage, extra-low voltage lighting systems and similar sources are examples of circuits or systems that are not considered an electrical hazard.*

Electrical Safety: Identifying hazards associated with the use of electrical energy precautions to reduce the risk associated with those hazards.

Electrically Safe Work Condition: A state in which an electrical conductor or circuit part has been disconnected from energized parts, locked out in accordance with established standards, tested to verify the absence of voltage, and if necessary, temporarily grounded for personnel protection.

Energized: Electrically connected to or having a source of voltage.

Energized Electrical Work Permit (EEWP): A written document that ensures that a work task requiring increased exposure to electrocution or thermal injury provides notification to the equipment owner, the electrical supervisor and the worker(s) that the risk of injury is increased. It provides the opportunity to re-evaluate the necessity for the increased risk of injury.

Energized Parts: Electrically energized conductive components.

Exposed: (as applied to energized electrical conductors or circuit parts) Capable of being inadvertently touched or approached nearer than a safe distance by a person. This term is applied to electrical conductors or circuit parts that are not suitably guarded, isolated, or insulated.

Fault Current: The amount of current delivered at a point on the system during a short-circuit condition.

Fault Current, Available: The largest amount of current capable of being delivered at a point on the system during a short circuit condition.

Note*: A short circuit can occur during abnormal conditions such as a fault between circuit conductors or a ground fault. If the dc supply is a battery system, the term available fault current refers to the prospective short circuit current.*

Flame Resistant (FR): The property of a material whereby combustion is prevented, terminated, or inhibited following the application of a flaming or non-flaming source of ignition, with or without subsequent removal of the ignition source.

Ground-Fault Circuit Interrupter (GFCI): A device intended for the protection of personnel that functions to de-energize a circuit or portion thereof within an established period of time when a current to ground exceeds the values established. Class A GFCI's must trip on greater than 6 mA current to ground within 6 ms. Class B GFCI's must trip on greater than 20 mA current within 7 ms.

Guarded: Covered, shielded, fenced, enclosed, or otherwise protected by suitable covers, casings, barriers, rails, screens, mats, or platforms to remove the likelihood of approach or contact by persons or objects to a point of danger.

Hazard: A source of possible injury or damage to health.

Hazardous: Involving exposure to at least one hazard.

Incident Energy (E): The amount of energy impressed on a surface, a certain distance from the source, generated during an electrical arc event. Incident energy is measured in calories/cm^2 or joules/cm^2.

Incident Energy Analysis: The determined and documented incident energy exposure of the worker in cal/cm^2. The exposure level shall be based on the working distance of the worker's face and chest areas from a prospective arc source for the task to be performed. Worker arc-rated clothing and personal protective equipment is selected on the basis of the *incident energy* exposure associated with the specific task. Because *incident energy* increases as the distance from the arc flash decreases, additional personal protective equipment is required for any parts of the body that are closer than the distance at which the incident energy was determined. Included in the *risk assessment* is the calculation of the applicable *arc flash boundary*.

Insulated - Separated from other conducting surfaces by a dielectric (including air space) offering a high resistance to the passage of current.

Injury: Personal injury from electrical shock, electrical burn, electrical explosion or arcing from fire or explosion initiated by electrical energy.

Incident energy: The amount of thermal energy, impressed on a surface a certain distance from the source, generated during an electrical arc event.

Isolated (as applied to location): Not readily accessible to persons unless special means for access are used.

Isolated (from power sources): Secure physical separation or blocking with non-conductive material sufficient to ensure equipment cannot be energized by identified power sources.

Job Safety Analysis (JSA): Procedure(s) developed for performing critical tasks, that includes steps, hazards, risk assessment, mitigation, PPE and the training required to safely perform the task.

Limited Approach Boundary, Shock: An approach limit at a distance from an exposed energized electrical conductor or circuit part within which a shock hazard exists.

Lockout: Placement of a lock on an energy-isolating device in accordance with an established procedure, thereby indicating that the energy-isolating device is not to be operated until removal of the lock or in accordance with an established procedure.

Lockout Device: a mechanical means of locking that uses an individually keyed lock to secure an energy-isolating device in a position that prevents energization of a machine, equipment, or a process.

Maintenance, Condition of: The state of the electrical equipment considering the manufacturers' instructions, manufacturers' recommendations, and applicable industry codes, standards, and recommended practices.

MCC Motor Starter Protection

Type 1: A form of motor control protection that requires that under short-circuit conditions, the contactor or starter shall cause no danger to persons or installation and might not be suitable for further service without repair or replacement of parts.

Type 2: A form of motor control protection that requires that under short-circuit conditions, the contactor or starter shall cause no danger to persons or installation and shall be suitable for further use. The risk of contact welding is recognized , in which case the manufacture shall indicate the measures to be taken regarding the maintenance of the equipment.

Overcurrent: A current in excess of the rated current of equipment or the ampacity of a conductor. It can result from an overload, short circuit or ground fault.

Overload: Operation of equipment in excess of normal, full-load rating, or of a conductor in excess of rated ampacity that, when it persists for a sufficient length of time, will cause damage or dangerous overheating.

Power Distribution Equipment: A generic term used to describe Motor Control Centers (MCC), Switchgear and Power Distribution Centers (PDC) as appropriate for the subject matter.

Procedure: Corporate or site documents that describe how to perform a task. Some procedures describe critical steps that must be performed to physically accomplish a task and others describe steps necessary to avoid injury.

Qualified Person (Worker): One who has demonstrated skills and knowledge related to the construction and operation of electrical equipment and installations and has received safety training to identify the hazards and reduce the associated risk.

Restricted Approach Boundary, Shock: An approach limit at a distance from an exposed energized electrical conductor or circuit part within which there is an increased likelihood of shock, due to electrical arc over combined with inadvertent movement, for personnel working in close proximity to the energized electrical conductor or circuit part.

Risk: A combination of the likelihood of occurrence of injury or damage to health and the severity of injury or damage to health that results from a hazard.

Risk Assessment: An overall process that identifies hazards, estimates the likelihood of occurrence of injury or damage to health, estimates the potential severity of injury or damage to health, and determines if protective measures are required.

> ***Note**: "Arc Flash Risk Assessment" and "Shock Risk Assessment" are types of risk assessments.*

Safe Work Zone: An area where a person cannot be in contact with any electrical source and where they are out of reach of any downed or broken wires.

Shock Hazard: A source of possible injury or damage to health associated with current through the body caused by contact or approach to *energized electrical conductors or circuit parts*.

***Note**: Injury and damage to health resulting from shock is dependent on the magnitude of the electrical current, the power source frequency (e.g., 60 Hz, 50 Hz, dc), and the path and time duration of current through the body. The physiological reaction ranges from perception, muscular contractions, inability to let go, ventricular fibrillation, tissue burns, and death.*

Shock Risk Assessment: A unique risk assessment process that identifies if a work task will expose a QEW or a QIW to Shock *Hazards*. The *Risk Assessment Process* requires the *Shock Hazard* to be identified, an estimate to the l*ikelihood of occurrence* of *injury or damage to health* and the potential severity of *injury or damage to health*. Determines if additional protective measures are required, including the use of PPE.

Short-circuit Current Rating: The prospective symmetrical fault current at a nominal voltage to which an apparatus or system is able to be connected without sustaining damage exceeding defined acceptance criteria.

Single Line Diagram (SLD): A diagram that shows, by means of single lines and graphic symbols, the course of an electric circuit or system of circuits and the component devices or parts used in the circuit or systems.

Step Potential: A ground potential gradient difference that can cause current flow from foot to foot through the body.

Temporary Protective Grounds (TPG): Devices installed temporarily on de-energized electric power circuits for the purpose of potential equalization and to conduct a short circuit current for a specified duration (time).

Total System Arc Rating: Is the arc rating or ATPV rating obtained when all clothing layers worn by a worker are tested as a multi-layer sample. *ASTM F 1959* test results should be provided by the fabric manufacturer or clothing manufacturer. It is important to understand that the total system arc rating cannot be obtained by adding the arc ratings of the individual layers.

Touch Potential: A ground potential gradient difference that can cause current to flow from hand to hand, hand to foot, or another path (other than foot to foot) through the body.

Unqualified Person: A person who is not a qualified person to perform a particular task or function.

Voltage, Nominal: A nominal value assigned to a circuit or system for the purpose of conveniently designating its voltage class (e.g. 120/240 V, 480V/277 V or 600 V).

Working Distance: The distance between a person's face and chest area and a prospective arc source. Default working distances are provided in IEEE 1584 as 18" for low voltage equipment, 24" for low voltage switchgear and 36" for high voltage switchgear (e.g. 4,160V, 13,800V, 25,000V, etc.).

Working On (energized electrical conductors or circuit parts): coming in contact with energized electrical conductors or circuit parts with the hands, feet, or other body parts, with tools, probes, or with test equipment, regardless of the personal protective equipment a person is wearing. There are two categories of "Working On":

- **Diagnostic** (testing): taking readings or measurements of electrical equipment with approved test equipment that does not require making any physical change to the equipment.
- **Repair**: any physical alteration of electrical equipment such as making or tightening connections, removing or replacing components, etc.

***Note**: Please refer to **CSA Z462 Workplace electrical safety Standard,** or other applicable Standards or sources for additional definitions.*

Definition references:

- *CSA Z462 Workplace electrical safety Standard*
- *NFPA 70E Standard for Electrical Safety in the Workplace*
- *International Electrotechnical Commission (IEC) 60947-4-1*
- *Electrical Safety-Related Work Practices, Second Edition, 2009*
- *Safe Work Practices for the Electrician, 2009*

URLs:

ANSI: American National Standards Institute www.ansi.org

ANSI / AIHA: American Industrial Hygiene Association www.standardsportal.org/usa_en/sdo/aiha.aspx

ANSI / NETA: InterNational Electrical Testing Association www.ansi.org

ASTM: American Society for Testing and Materials www.astm.org

ESFI: Electrical Safety Foundation International www.esfi.org

IEC: International Electrotechnical Commission www.iec.ch

IEEE: Institute of Electrical and Electronics Engineers www.ieee.org

ISHM: Institute for Safety and Health Management www.ishm.org

ISO: International Organization for Standardization www.iso.org

NEC: National Electrical Code www.nfpa.org

NESC: National Electrical Safety Code http://standards.ieee.org/nesc/

NFPA: National Fire Protection Association www.nfpa.org

NIOSH: National Institute of Occupational Safety & Health www.cdc.gov/niosh/

NSMS: National Safety Management Society www.nsms.us

OHSA: Occupational Safety and Health Administration www.osha.gov

OHSAS: Occupational Health & Safety Advisory Services www.ohsas.org

UL: Underwriters Laboratories www.ul.com

ULC: Underwriters Laboratories of Canada www.ul.com/canada/eng/pages/

Canadian Provinces & Territories OH&S:

Alberta OH&S http://employment.alberta.ca/sfw/53.html

Worksafe Alberta: www.employment.alberta.ca/whs/network/

British Columbia OH&S www.worksafebc.com

WorksafeBC: www.worksafebc.com

Manitoba OH&S www.gov.mb.ca/labour/safety

Safe Work Manitoba: http://safemanitoba.com/

New Brunswick OH&S www.worksafenb.ca

Newfoundland & Labrador OH&S www.gs.gov.nl.ca/ohs/

Northwest Territories & **Nunavut** OH&S www.gov.nt.ca/agendas/health

Nova Scotia OH&S www.gov.ns.ca/lwd/healthandsafety/

Ontario OH&S www.labour.gov.on.ca

PEI OH&S www.gov.pe.ca/psc/ohs

Quebec OH&S www.gouv.qc.ca/portail/quebec/pgs/commun/portrait/modernesolidaire/mesuressociales/santesecurite/?lang=en

Saskatchewan OH&S www.lrws.gov.sk.ca

Yukon OH&S www.wcb.yk.ca

Other:

Summary of Part II of the Canada Labour Code: https://www.canada.ca/en/employment-social-development/services/health-safety/reports/summary.html

Canada Labour Code Part 2: http://laws-lois.justice.gc.ca/eng/acts/L-2/page-22.html

United States Department of Labor, Occupational Safety Health Administration: www.osha.gov

Application of Electrical Safety Program (ESP) in the Work Flow Process Flow Chart

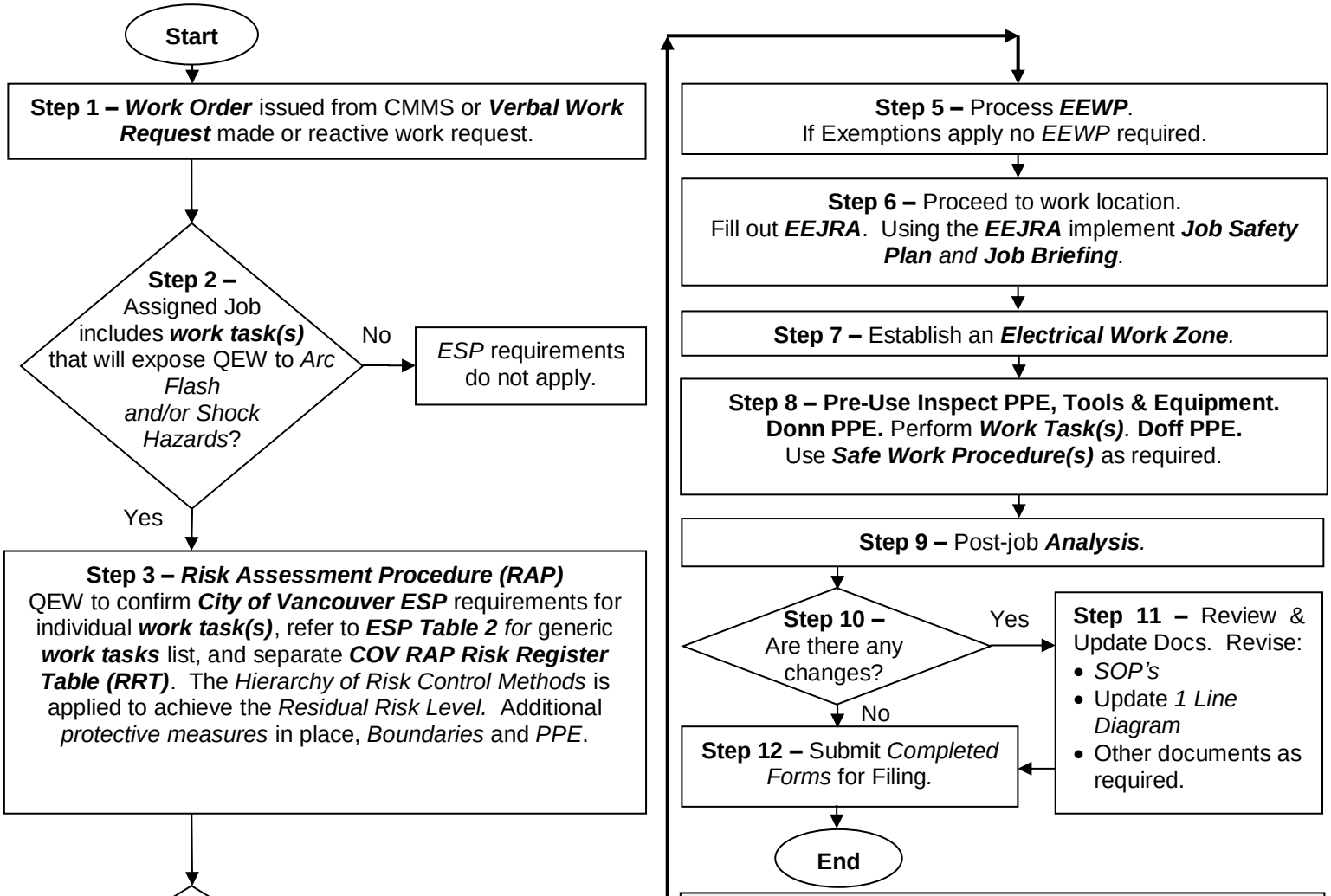

Energized Work Task *justified* Due to:

Greater Hazard: Additional hazards or increased risk.

Infeasibility: Due to equipment design or operational limitations.

Less than 30V: No *EEWP* required.

Exemption for EEWP: Testing, trouble-shooting, voltage measuring, current measuring, thermography, ultrasonic inspection, access and egress to an area with *energized electrical equipment* if no electrical work performed and general housekeeping and misc. non-electrical tasks if the *Restricted Approach Boundary* is not crossed.

LEGEND

CMMS	Computerized Maintenance Management System		
EEJRA	Energized Electrical Job Risk Assessment Form (See *ESP Appendix*)	**EEWP**	Energized Electrical Work Permit
QEW	Qualified Electrical Worker	**RAP**	Risk Assessment Procedure
RRT	Risk Register Table	**SOP**	Safe Operating Procedure

Note: *Refer to* ***City Of Vancouver's Electrical Safety Program****.*
Specifically ***Section 6*** and the *ESP Appendix E Risk Assessment Procedure & Electrical Hazard Risk Assessment Matrix*

APPENDIX C: RESERVED For Future Use

APPENDIX D: Energized Electrical Job Risk Assessment (EEJRA) FORM

Form #: ESP0002

Energized Electrical Job Risk Assessment (EEJRA) Form

ENERGIZED ELECTRICAL JOB RISK ASSESSMENT / EEJRA

[0001]

Work Task Description: | **Date:** (DD / MM / YY) | **Time:**

Equipment Tag & Description: | **Maximum Working Voltage:**

Work Location/Street Address:

Work Order #:

***Always* TEST-BEFORE-TOUCH!**

JOB SAFETY PLANNING & JOB BRIEFING

1. You are capable and understand the work task and its requirements? ☐ **YES** ☐ **NO**
2. All other work task specific workplace hazards have been assessed? ☐ **YES** ☐ **NO**
3. *Risk Assessment Procedure* ☐ **YES** ☐ **NO**
   Risk Register completed?
   Residual Risk Level = ☐ **L** ☐ **M** ☐ **H**

SHOCK RISK ASSESSMENT

4. Shock Hazard exists? ☐ **YES** ☐ **NO**
   Voltage of exposed equipment = _____V
   Limited Approach Boundary (LAB) = _____ in/m
   Restricted Approach Boundary (RAB) = _____ in/m

ARC FLASH RISK ASSESSMENT EXEMPTIONS

***Note**: Refer to COV ESP for more details.*

A. 120/240V single phase.
B. 120/208V, three phase, 30 kVA or less.
C. Maximum voltage is less than or equal to 30V.
D. 120VAC/125VDC control wiring work involving panels, I/O cards, field devices, powersupplies.

ARC FLASH RISK ASSESSMENT

5. Arc Flash Hazard Exists? ☐ **YES** ☐ **NO**

***Note**: For 6 & 7 use CSA Z462 Tables 6A or 6B if no detailed Equipment Label or Results Table is available.*

6. *Maximum Available Fault Current =* _____ *kA* (based on upstream transformer kVA and Z%)
7. If protected by C.B. or fuse the *Maximum Fault Clearing Time =* _____cycles (_____seconds)
8. Maximum *Incident Energy Level =* _____cal/cm²
9. *Working Distance* for *Work Task =* _____ in/m
10. *Arc Flash Boundary =* _____ in/m
11. *Electrical Work Zone* barricading established at a distance of = _____ in/m (*ESP* min. 10 ft.)

***Note:** Only QEWs allowed within the Electrical Work Zone. Unqualified Workers can enter this Zone only if 100% supervised by QEW and wearing full AR PPE.*

12. If a *Maintenance Mode switch* is installed, is it ON and locked and tagged? ☐ **YES** ☐ **NO**

PROCEDURES

13. Do you require an *EEWP*? ☐ **YES** ☐ **NO**
14. Do you have *specific Electrical Safe Operating Procedure(s)* to use? ☐ **YES** ☐ **NO**

PPE, TOOLS & EQUIPMENT

15. Select arc flash PPE ESP *Level* based on Incident Energy Analysis or Arc Flash PPE Category:
    ☐ ESP *Level 0* Basic PPE Worn
    ☐ ESP *Level 1* PPE Min. Arc Rating 8 cal/cm²
    ☐ ESP *Level 2* PPE Min. Arc Rating 40 cal/cm²
    ☐ Other: _____
16. All *Arc Flash PPE* has been pre-use inspected, correct fit and is suitable for use? ☐ **YES** ☐ **NO** ☐ **N/A**
17. Are *Rubber Insulating Gloves with Leather Protectors* required? ☐ **YES** ☐ **NO**
    Identify *Max Use AC/DC Voltage*: _____
18. *Rubber Insulating Gloves* pre-use inspected, air tested and suitable for use? ☐ **YES** ☐ **NO**
19. *Insulated Hand Tools* required? ☐ **YES** ☐ **NO**
20. *Hot Stick* required? ☐ **YES** ☐ **NO**
21. Properly rated *Voltage Detector* required, if DMM, is minimum CAT III, 600V? ☐ **YES** ☐ **NO**
22. *Temporary Protective Grounds & Test Device* to be used? ☐ **YES** ☐ **NO**
23. All Other *Tools & Equipment* have been pre-use inspected and suitable for use? ☐ **YES** ☐ **NO**

HUMAN BEHAVIOUR & PERFORMANCE

24. Healthy, Good State of Mind, Fully Alert and ready to perform this job? ☐ **YES** ☐ **NO**

CONDITION OF EQUIPMENT PRIOR TO BEING WORKED ON

25. Equipment installed properly? ☐ **YES** ☐ **NO**
26. Equipment properly maintained? ☐ **YES** ☐ **NO**
27. Equipment used in accordance with manufacturer's instructions? ☐ **YES** ☐ **NO**
28. Doors are closed and secure? ☐ **YES** ☐ **NO**
29. Covers are securely in place? ☐ **YES** ☐ **NO**
30. No evidence of impending failure? ☐ **YES** ☐ **NO**

***Stop Work** and contact your Supervisor if you answered **NO** to any items above.*

ISOLATION

31. *Isolated, Lock & Tag* applied by every worker? ☐ **YES** ☐ **NO**
32. *Absence of voltage* verified? ☐ **YES** ☐ **NO**
33. *Temporary Grounds applied*? **ID#:** _____ ☐ **YES** ☐ **NO**

EMERGENCY RESPONSE

34. Identify *upstream emergency isolation device* tag #: _____
    ***Note:** Reference Single Line Diagram (SLD).*
35. Is a *Qualified Electrical Worker Standby Person* required? ☐ **YES** ☐ **NO**
36. *Rescue Hot Stick* or *other Hot Stick* available for use if required? ☐ **YES** ☐ **NO**
37. *Flashlight, First Aid Kit* and *Fire Extinguisher* for use by *QEW*? ☐ **YES** ☐ **NO**

Worker Name & Signatures: *(All signatures must be legible.)*

1._____ 2._____
3._____
4._____

Supervisor/Foreman's Signature:

_____

Required Only for Audit/Review Purposes

ENERGIZED ELECTRICAL JOB RISK ASSESSMENT / EEJRA

Fold Line

Notes:

Fold Line

CITY OF VANCOUVER

Electrical Safety Program

Work Flow Process (WFP)

Instructions:

1. *Work Order* for Job or *Reactive Work Request* received.
2. Qualified and competent worker assigned work task.
3. De-energize if possible.
4. Work task(s) to complete the Job requested must be completed energized and will expose QEW to arc flash and/or shock.
5. Complete *Risk Assessment Procedure*. Reference *City of Vancouver Electrical Hazards Risk Assessment*. Complete *Arc Flash & Shock Risk Assessment*.
6. Complete *EEWP* if required. Use EEJRA.
7. At work task location, complete *EEJRA*. Document *Arc Flash and Shock Risk Assessments* from Step 5. Use *EEJRA* for *Job Safety Planning and Job Briefing*.
8. Establish an *Electrical Work Zone*.
9. Use *Safe Operating Procedure* as required.
10. Complete the energized work task(s).
11. Post job analysis – update any single lines or other documents, record any near miss.
12. Close off *Work Order*, submit all paperwork to Supervisor.

PLAN-DO-CHECK-ACT

APPENDIX E. ELECTRICAL HAZARD RISK ASSESSMENT MATRIX

Table of Contents

List of Figures

List of Forms

List of Tables

1.0 RISK ASSESSMENT PROCEDURE (RAP)

Consistent with risk assessment Standards the risk related to an *energized electrical work task* is comprised of an evaluation of the "*consequences / severity / harm" of the exposure to the hazards to the "likelihood or probability" of occurrence*. As outlined in *CSA Z462 / NFPA 70E Annex F Risk Assessment Procedure* an *electrical hazard specific risk assessment process and procedure* is provided. Please refer to *CSA Z462 / NFPA 70E Annex F* for a more detailed explanation and requirements.

An *initial or inherent risk assessment* of the *energized electrical work task* without the implementation of any *preventive and protective control measures* is the starting point. If the *risk level* is high for any of the *work task/hazard pairs* the application of *preventive and protective control measures* should be reviewed and implemented to reduce the risk from high to *as low as reasonably practicable (ALARP)*.

A *high-risk work task* may still be capable of being executed after control measures are implemented. Special approvals will most likely be required.

How to use the *Electrical Hazard Risk Assessment Matrix*, example provided:

- Determine *Severity of the Possible Harm (Se)* for shock, arc flash and arc blast pressure.
- Determine the *Likelihood of Occurrence* parameter of *Frequency and Duration of Exposure (Fr)*.
- Determine the *Likelihood of Occurrence* parameter of *Probability of Occurrence of the Hazardous Event (Pr)*.
- Determine the *Likelihood of Occurrence* parameter of *Probability of Avoiding or Limiting Harm (Av)*.
- Determine *Risk Class (Rc)*: Rc = Se + Fr + Pr + Av
- Using the *Electrical Hazard Risk Assessment Matrix* match the row for *Severity, Se* to the column for *Risk Class (Rc)* to determine the *Risk Level (Rl)* as low, medium or high for each *work task/hazard pair*. Consider the *overall Risk Level (Rl)* as the highest *Risk Level (Rl)* of the three individual work task/hazard pair *Risk Levels (Rl)*.
- If the *Residual Risk (Rr)* is not acceptable, apply additional preventive and protective control measures until the risk is *As Low As Reasonably Practicable (ALARP)*.
- Implement the *energized electrical work task* based on the *Risk Level Actions Required* as identified in *Section 6* below.

Notes:

1. *For Shock Risk Assessment the overall risk without the application of control measures would be "High Risk" as electrocution is possible (e.g. Se = 8). With the application of rubber insulating gloves with leather protectors that have been tested within the last 6 months (e.g. 3 months in the Province of Ontario for Class 1 or higher) and are pre-use inspected to determine the suitability for use, the Severity or Harm (Se) would be 0mA (e.g. Se = 0). Wearing suitable and appropriate shock protection even with inadvertent movement there would be no current flow through the human body (e.g. Se = 0) with the hands as the current entry point. The risk assessment requires further evaluation to determine the Likelihood of Occurrence and the overall Risk Level would still be determined to be "Low Risk" based on Severity.*

2. *For Arc Flash Risk Assessment with the example of a voltage check work tasks without the application of control measures (e.g. no arc-rated PPE worn) and as long as the voltage level was high enough to sustain an arcing fault and create an arc flash the Severity or Harm (Se) would be irreversible trauma or death due to burn (e.g. Se = 8). With the application of control measures such as suitable and appropriate arc-rated PPE the Severity of Harm (Se) would be reduced to reversible second degree burn (e.g. Se = 3). The risk assessment requires further evaluation to determine the Likelihood of Occurrence and the overall Risk Level as "Low Risk, Medium Risk or High Risk." Additional control measures other than PPE are required to reduce the Likelihood of Occurrence and the overall Risk Level.*

1.1 Steps Required to Complete the Risk Assessment Procedure (RAP)

In order to complete the *Risk Assessment Procedure* as summarized above the following detailed steps should be followed:

1. *Work Order* is assigned to a Qualified Electrical Worker. The *work task is energized electrical work that is justified*.
2. The Qualified Electrical Worker must determine if they will be *exposed to harm* (e.g. Consequence or Severity, Se) from *arc flash and associated arc blast pressure or shock* when performing the *assigned energized electrical work task*.
3. If the QEW assesses that they will be *exposed to shock or arc flash or both electrical hazards* then they must complete the *Risk Assessment Procedure*.
4. The *Risk Assessment Procedure* requires that:
    a. *Electrical hazards* are identified;
    b. *Assess risk*;
    c. Apply the *Hierarchy of Control Measures to reduce risk*.

5. If no *PPE, tools & equipment* are used the *initial or inherent harm for shock* would be determined to be death due to electrocution, 3rd degree burn or death from the arc flash, and reversible physical trauma for arc blast pressure (e.g. there have been no documented fatalities so the *ESP* assumes worst case injury would be reversible). The *initial or inherent harm* alone would make the *energized electrical work task Risk Level, High*.
6. The QEW would now proceed to determine the *initial or inherent Risk Level* without the application of controls to positively impact the *Likelihood of Occurrence*. Determine the status quo *Likelihood of Occurrence Parameters*, Frequency of Exposure (Fr), Probability of Occurrence (Pr) and Ability to Avoid Exposure (Av) based on the status quo.
7. It is easy to determine Fr for your work task. How often do you perform the work task, hourly, daily, weekly, once a year or less frequently. The more often you perform the task, the more frequent you are potentially exposed to the hazard or harm. You select the frequency of exposure and it has an associated "value" with it that you record in a *Risk Register Table* (e.g. see *Table E-4* below). See *Section 1.4* below for additional items to consider related to Fr.
8. In order to determine Pr for you work task you must consider several different factors and make a subjective decision if the probability of the hazardous event actually occurring is: Very High, Likely, Possible, Rarely or Negligible. Some of the key factors you need to consider are: Are you *Qualified & Competent*? Is your *Human Performance Behaviour acceptable* are you of *good state of mind and health*? Is the energized electrical equipment in a *normal operating condition*? Is there any *environmental contamination* present? Are there issues related to where you will be performing the work task (e.g. height, inclement weather for work outdoors). You select the probability of occurrence and it has an associated "value" with it that you record in a *Risk Register Table* (e.g. see *Table E-4* below). See *Section 1.5* below for additional items to consider related to Pr.
9. In order to determine Av for your work task you must consider different factors and make a subjective decision if the *likelihood of avoiding or limiting harm* is: Impossible, Rarely or Probable. One of the key elements to consider is the benefit of *PPE, tools & equipment*. Other elements to consider are your *Qualifications & Competency*, your *Human Performance Behavior*, and the *application of a procedure to perform the work task*. You select the likelihood of avoiding or limiting harm and it has an associated "value" with it that you record in a *Risk Register Table* (e.g. see *Table E-4* below). See *Section 1.6* below for additional items to consider related to Av.

10. In order to record the assessed values of Severity, Frequency, Probability and Avoidance the *Electrical Safety Program* provides a *Risk Register Table*. Both a simple version of a *Risk Register Table* are provided below in *Section 4.0* and as a separate Excel Spreadsheet (see example in *Section 7* below). In *Section 4.0* the *Risk Register Table* has been completed as an example for a voltage check on an MCC.
11. If the determined *initial or inherent Risk Level* (e.g. IHR) is not acceptable, then apply the *Hierarchy of Controls* to reduce the *initial or inherent risk*.
12. In order for the QEW to reduce Harm (e.g. Consequence or Severity, Se) an *Arc Flash Risk Assessment and Shock Risk Assessment* must be completed.
13. The *Arc Flash Risk Assessment* can be performed by either reading the *detailed Arc Flash & Shock Warning equipment label* on the equipment or if no label is present, using the *Arc Flash Hazard Identification, Arc Flash PPE Category Table Method*. To assist you in completing the assessments you can use the *ESP Appendix G Arc Flash & Shock Risk Assessment Form*. Use of this form is not a mandatory requirement. You determine the *arc-rating of the arc flash protective clothing* you require, the *working distance* you must maintain from the potential arcing fault location to your face and torso and the *Arc Flash Boundary* distance.
14. The *Shock Risk Assessment* is completed by identifying the maximum possible voltage you may be exposed to when completing the *work task*. You can determine this by reviewing a *single line diagram*, inspecting the equipment or it will be stated on the *detailed Arc Flash & Shock Warning equipment label* on the equipment (if a label is installed). Once you have determined the *maximum voltage* this voltage level is used when you reference *CSA Z462-15 Table 1A* for AC or *NFPA 70E Table 130.4(D)(a)* for AC to determine the *Limited and Restricted Approach Boundaries* for the *work task*. If you work task requires you to enter the *Restricted Approach Boundary* you will have to wear *rubber insulating gloves with leather protectors* and use other *insulated and insulating hand tools* as required.
15. Now that you have completed the *Arc Flash Risk Assessment and Shock Risk Assessment* the *Harm* (e.g. Consequence or Severity, Se) can be reduced for each hazard. It is noted that there is currently no PPE available to reduce the harm from being pushed back from the energized electrical equipment being worked on by any released *arc blast pressure*. It is further noted that there have been NO documented fatalities related to *arc blast pressure* and therefore it is recommended that the harm be assessed as repairable broken bones.
16. Applying the *Risk Assessment Procedure (RAP)* will result in the *Residual Risk Level* to be determined for the three (3) work task/hazard pairs. Again take the highest *Risk*

Level for the work task/hazard pairs as the *overall Residual Risk Level*. Implement the required *Risk Level Actions Required* as provided below in *Section 6*.

17. In the field the QEW must fill out the *Energized Electrical Job Risk Assessment (EEJRA) form* to document the *Arc Flash Risk Assessment, Shock Risk Assessment*, and verify the application of the *preventive and protective control measures* that were applied to reduce risk.

1.2 Apply Hierarchy of Control Measures to Reduce Severity and Likelihood of Occurrence

As per *CSA Z1000* and *CSA Z1002*, the *Hierarchy of methods for control* are as follows:

a) Eliminate the hazard;

b) Substitute with other materials, processes, or equipment;

c) Apply engineering controls "*Safety by Design*";

d) Use systems that increase awareness of potential hazards, barricading and signage;

e) Administrative controls such as training and procedures, work task instructions, etc.; and

f) Apply *PPE, tools & equipment* ensuring it is appropriate for the hazard, cared for, used properly and maintained.

Implementing these control measures will provide a positive effect in reducing Severity (Se), and the *Likelihood of Occurrence Parameters* of: Frequency (Fr), Probability (Pr) and Avoidance (Av) in the following ways:

Severity (Se): eliminating the hazard is the most effective way to avoid harm and control risk. This is why it is the first and top priority in the hierarchy of control measures. For electrical hazards, this is achieved by *establishing an Electrically Safe Work Condition* (e.g. isolating, checking for visible disconnect, checking for *absence of voltage*, *locking out*, and applying *temporary protective grounding* where necessary). Once the voltage is removed, the *Shock, Arc Flash and associated Arc Blast hazards* are eliminated.

Substitution and engineering controls will also reduce the Severity (Se). New arc-resistant switchgear for example, eliminates the need for *Electrical Specific PPE* and virtually removes the risk of harm to the Qualified Electrical Worker from an *Arc Flash and Arc Blast Pressure*.

To effectively control access to electrical equipment and an electrical system, the use of *barriers, signage, safe operating procedures and practices, qualifications and training,* and lastly *PPE* will reduce the Severity (Se) to the worker. It must be noted however; these items do not reduce the hazards of shock and arc flash, only the effects of harm to the worker. The

hazard is inherent to the equipment. For example, applying appropriate PPE does not change the hazard, only the Severity (Se) to the worker if a failure or an electrical incident were to occur. The QEW will still receive an injury, but it will be reversible with appropriate *PPE, tools & equipment* applied to the *energized electrical work task*.

The *Likelihood of Occurrence* is based on three parameters as mentioned above: Fr, Pr and Av. These three parameters should be assessed independently of each other. A worst-case assumption for each parameter needs to be applied to ensure the *appropriate preventive and protective measures* will effectively reduce the *Risk Level*.

Frequency and duration of exposure, as far as the *hierarchy of controls* is concerned, can be summed up as follows:

- If the hazard is eliminated, there is no exposure to the hazard, therefore no harm to the worker;
- By *substituting other materials, processes, or equipment, and apply engineering controls, duration of exposure will be shortened or eliminated*, again minimizing harm. For example, if a current reading is required on an electrical system and the worker is required to use a DMM inside the panel, the panel would have to be opened and the meter applied. This would be exposing the worker, at a certain frequency, to the *hazards of shock and potential arc flash and arc blast pressure*. If it's possible we apply *engineering controls* and move the current reading to a meter installed outside the panel. Now our reading is done with no exposure and the frequency of exposure is reduced to >year;
- Using properly designed *work procedures/instructions* will also shorten the duration of exposure, reducing harm to the worker.

Elements of the electrical system design should be taken into consideration in the determination of the likelihood of the hazardous event occurring. When engineering controls such as current limiting devices are used, these will contribute to an inherently safer design and lower the severity of harm to the worker.

Human performance behaviour and interaction with the electrical equipment is also a factor when considering the *likelihood of occurrence*, probability of a hazardous event. Stress, due to time constraints (whether real or self-imposed), the current health of the QEW and lack of information relevant to the work task can contribute to a higher *likelihood of occurrence*.

Lastly, we must consider the *likelihood of avoiding or limiting the injury or damage to health* (Av). This parameter as far as the *hierarchy of controls* is concerned is fairly easy to determine. Again, if the hazard is eliminated, we can consider it is very probably to avoid harm. Using engineering controls and substitution with other processes or systems will increase the

likelihood we can avoid exposure to harm. Equipment such as finger-safe components and covers can reduce the likelihood of contact with energized parts. Using systems to increase awareness to the hazards, such as signage and warning labels will inform the Qualified Electrical Worker to the hazards internal to the equipment. Training increases awareness, improves on technical skills and has a positive impact on the Qualified Electrical Worker's ability to avoid exposure. When appropriate *PPE, tools & equipment* are used, the *likelihood of avoiding* or not coming in contact with the hazard is greatly increased.

1.3 Likelihood of Occurrence of Harm Parameters

With respect to the *Likelihood of Occurrence of Harm parameters* listed above the following additional information is provided to clarify how to assess these parameters. A subjective process must be implemented which includes a *field-based, condition-based assessment of the energized electrical equipment*. The *Electrical Safety Program's* required *Energized Electrical Job Risk Assessment (EEJRA) form* accommodates ensuring the assumptions that may have been made in the shop are field validated.

1.4 Frequency and Duration of Exposure (Fr)

How often is the task performed? The more frequent a work task is performed the more often the Qualified Electrical Worker is exposed to electrical hazards. The Frequency parameter can also be used to positively influence the *Likelihood of Occurrence* of the Hazardous Event parameter (Pr). The more frequent a work task is performed the more competent a Qualified Electrical Worker will be at completing it with a lower likelihood of human error as long as the Qualified Electrical Worker doesn't become complacent in performing the work task.

1.5 Probability of Occurrence of the Hazardous Event (Pr)

As identified above there will be many factors that must be subjectively reviewed to determine the probability parameter. Two different people may provide a different assessment. The Qualified Electrical Worker(s) performing the risk assessment need to consider:

A. The QEW is aware of the electrical hazards, has *appropriate training, experience and demonstrated skills* and is able to manage the complexity of the *energized electrical work task*.
B. *Human Behaviour Performance*. The QEW is in good state of mind and in good health when performing the work task (e.g. stress level is acceptable, no tooth ache, not suffering from a cold or flu, unable to complete the work task due to physical injury, etc.).
C. *Frequency of work task execution* to assess competency in completing the *work task*.
D. *Equipment is approved, installed and maintained* to an *approved Standard*.

E. QEW is using *procedures* to reduce likelihood of human error.
F. Frequent *electrical safety training* on the requirements and application of *CSA Z462* maintains competency.
G. Minimum *maintenance* as recommended by the Manufacturer has been completed. *Industry Standards* have been used to establish *maintenance strategies and frequency of maintenance*.
H. Evidence of impending failure (e.g. heating, bulging, smoke, smell, etc.).
I. Environmental contamination (e.g. water, snow, dust, etc.).
J. Animal infestation (e.g. nesting, animal actually present (e.g. snake)).

Note: *As you open the hinged door or remove the cover on energized electrical equipment your initial assessment of condition (e.g. state of maintenance or environmental contamination) may change and may then have an effect on the Risk Class that has been assigned. Work task execution should stop and the Risk Assessment reopened and the Risk Level re-evaluated as low, medium or high risk and appropriate corrective action is required to return the energized electrical equipment to a "Normal" operating condition.*

1.6 Likelihood of Avoiding or Limiting Injury (Av)

The ability to inherently avoid exposure or implement *preventive and protective controls measures* that can positively impact the ability to avoid exposure are evaluated and a subjective decision made of the benefit to risk reduction, including the following:

A. Training and appropriate verified knowledge and skills for QEW.
B. When you approach the equipment all doors are closed or covers on. Equipment is in *"Normal" operating condition*.
C. Before opening the door or removing a cover you ensure that the exterior environment or equipment condition cannot contaminate the inside of the equipment, compromising insulation that could cause an arcing fault (e.g. dust on top of cabinet, rain or snow entering cabinet, etc.).
D. When you start to open the door or remove the cover you confirm that *adequate guarding and insulation* are in place.
E. *Finger safe components* have been installed.
F. *Warning signs* are installed to increase awareness.
G. *Arc Resistant Switchgear* or "arc free" equipment designs are specified and installed.
H. You can *safely egress the work task area*.
I. *Remote switching* is provided.
J. QEW is using procedures to reduce likelihood of human error.
K. *Remote racking* in and out of power circuit breakers is provided.

L. *Personal Protective Equipment* can be worn that will reduce severity and avoid harm. Other tools and equipment can be used to reduce risk of or eliminate exposure.

2.0 CONSEQUENCES

The following table provides potential harm (e.g. Consequences or Severity, Se) for the hazards of; *Shock, Arc Flash Burn and Arc Blast* and provides a Severity (Se) rating. The Se rating is used in the *Risk Register Table* to calculate the *overall Risk Level* for the *energized electrical work task*.

Table E- 3 – Harm, Consequence or Severity of Injury or Damage to Health (Se)

Consequence Shock	Consequence Arc Flash Burn	Consequence Arc Blast	Severity (Se)
Electrocution – Irreversible Trauma or Death (Fatality)	Irreversible Trauma or Death (Burn Injury led to Fatality)	Irreversible Trauma or Death (Fatal Physical Injury)	8
Heart Fibrillation 75-250mA	Permanent; Third-Degree Burn	Concussion or external bleeding	6
Breathing Difficulty, 30mA	Reversible; Second-Degree Burn	Repairable; Broken Bones	3
Pain, 1-10mA	Reversible; First-Degree Burn	Minor Bruising	1
0 mA	No Visible Burn	No Injury	0

3.0 FREQUENCY, PROBABILITY & AVOIDANCE PARAMETERS – RISK CLASS DETERMINATION

Table E-4 – Likelihood of Occurrence Parameters, Fr, Pr, and Av

Frequency (Fr)		Probability of Occurrence (Pr)		Avoidance (Av)	
< or equal 1 Per Hour	5	Very High	5		
> 1 Per Hour or < or equal to 1 Per Day	5	Likely	4		
> 1 Per Day < or equal to 1 every 2 Weeks	4	Possible	3	Impossible	5
> 1 every 2 Weeks < or equal to 1 Per Year	3	Rarely	2	Rarely	3
>1 Per Year	2	Negligible	1	Probable	1

4.0 RISK REGISTER TABLE

A "*Risk Register Table*" as illustrated below can be used to record the *work task hazard/pair risk assessment completed*. For each *energized electrical work task* where *exposure to arc flash and shock* is assessed as realistic the *Risk Assessment Procedure* shall include an evaluation of the consequence or harm and the *likelihood occurrence* for the specific work task to derive a *residual Risk Level (Rl)*. The *Risk Level* will determine if the work task can proceed or not and what *preventive and protective control measures* will be required to be implemented if the *energized electrical work* proceeds.

The *Risk Register Table* can be used to assess *Initial or Inherent Risk (IHR)*. If the *Risk Level* is acceptable then no additional controls are required. If the *Risk Level* is not acceptable apply *preventive and protective controls* to reduce risk and assess the *residual Risk Level*. If the *residual Risk Level* is acceptable then proceed with executing the *energized electrical work task* applying all *applicable preventive and protective control measures*.

To implement the use of this *Risk Register Form*, Please reference *ESP Form ESP-00014 Risk Assessment Procedure, Risk Register Table*, see example in *Section 7* below. This form is a *MS Excel Spreadsheet* that can be printed out and used manually or used directly as an *Excel Spreadsheet* to document completion of the *Risk Assessment Procedure*.

Table E-5 – Risk Register Table Example - Summation

Work Task Description: Voltage check, troubleshooting					**Date: December 10, 2014**			
Work Location: Facility 1, MCC Building					**Maximum Working Voltage: 480 V**			
Equipment Tag & Description: MCC1 Motor Control Centre (MCC) #1					**QEW Name: Tom Henry**			
Work Order #: 01234					**Supervisor: John Smith**			
Work Task #	**Electrical Hazard**	**Se**	**Fr**	**Pr**	**Av**	**Risk Class (Rc)**	**Risk Level (Rl)**	**Residual Risk**
Status Quo – No Assessed Controls								
1 IHR	Arc Flash	8	5	1	3	17	High	
1 IHR	Arc Blast	3	5	1	3	12	Medium	
1 IHR	Shock	8	5	1	3	17	High	
Arc Flash & Shock Risk Assessment Completed – Apply Hierarchy of Controls to reduce risk								
1 RAP	Arc Flash	3	5	1	1	10		Low
1 RAP	Arc Blast	3	5	1	1	10		Low
1 RAP	Shock	0	5	1	1	7		Low

Notes:

Example above is for 480V voltage check related to troubleshooting.

Rc = Se + Fr + Pr + Av

Rl = Se vs Rc (refer to the Electrical Hazard Risk Assessment Matrix, Section 5)

RAP = Risk Assessment Procedure is applied to reduce risk and if residual risk is acceptable then proceed with the energized electrical work ensuring all assessed conditions are valid and all preventive and protective control measures implemented.

IHR = Inherent Risk

Table E-4 below provides a blank version of the Risk Register Table.

Table E-6 – Risk Register Table - Summation

Work Task Description:					**Date:**			
Work Location:					**Maximum Working Voltage:**			
Equipment Tag & Description:					**QEW Name:**			
Work Order #:					**Supervisor:**			
Work Task #	**Electrical Hazard**	**Se**	**Fr**	**Pr**	**Av**	**Risk Class (Rc)**	**Risk Level (Rl)**	**Residual Risk**
Status Quo – No Assessed Controls								
1 IHR	Arc Flash							
1 IHR	Arc Blast							
1 IHR	Shock							
Arc Flash & Shock Risk Assessment Completed – Apply Hierarchy of Controls to reduce risk								
1 RAP	Arc Flash							
1 RAP	Arc Blast							
1 RAP	Arc Shock							

5.0 ELECTRICAL HAZARD RISK ASSESSMENT MATRIX

Figure E-4 – Electrical Hazard Risk Assessment Matrix

Consequence	Severity (Se)	Risk Class (Rc)					Likelihood of Occurrence Parameter		
		4 -5	6-10	11-15	16-20	21-23	Frequency (Fr)	Probability (Pr)	Avoidance (Av)
Work Task / Hazard Pairs Arc Flash, Arc Blast Pressure or Shock	8						Hourly 5	Common 5	
	6						Daily 5	Likely 4	
	3						Weekly 4	Possible 3	Impossible 5
	1						Yearly 3	Rare 2	Possible 3
	0						Less Often 2	Negligible 1	Likely 1

6.0 RISK LEVEL ACTION REQUIRED

6.1 Red – Risk Level is High Risk

Work task is not allowed unless additional risk control methods are applied to reduce risk. See your Supervisor. Detailed action and plan required. Supervisor to review QEWs interpretation of *Likelihood of Occurrence* evaluation of parameters. Focus review on Probability (Pr) and ensure that subjective evaluation was acceptable. May require specific *Management review*.

6.2 Yellow – Risk Level is Medium Risk

Caution is required. Incorporates some level of risk that is unlikely to occur. Apply all *preventive and protective risk control methods*. Take remedial action at appropriate time.

6.3 Green – Risk Level is Low Risk

No risk control methods or no additional risk control methods are required. Monitor and maintain risk control methods in place. Manage by routine. Little or no impact.

7.0 SAMPLE OF RISK ASSESSMENT PROCEDURE, RISK REGISTER TABLE

Form 1 – ESP0014 – Risk Assessment Procedure, Risk Register Table Form

Risk Assessment Procedure (RAP)
Risk Register Table (RRT)

Work Task Description: _____ **Date**: ____/_____/20____

Work Location: _____ **Maximum Working Voltage**: _____V

Equipment Tag & Description: _____ **QEW Name**: _____

Work Order #: _____ **Supervisor**: _____

Description of terms used:
Risk Level (Rl) = Se vs. Rc
Risk Class (Rc) = Se + Fr + Pr + Av

Risk Level: Low / Medium / High

IHR = Inherent Risk
Rr = Residual Risk
RAP = Risk Assessment Procedure

Arc Flash Consequences	Severity (Se)	Risk Class (Rc) 4-5	6-10	11-15	16-20	21-23	Likelihood of Occurrence: Frequency (Fr)	Probability (Pr)	Avoidance (Av)
Irreversible trauma, death	8						Hourly 5	Common 5	
Permanent, third degree burn	6						Daily 5	Likely 4	
Reversible, second degree burn	3						Weekly 4	Possible 3	Impossible 5
Reversible, first aid	1						Yearly 3	Rarely 2	Possible 3
No injury	0						Less 2	Negligible 1	Likely 1

Arc Blast Consequences	Severity (Se)	Risk Class (Rc) 4-5	6-10	11-15	16-20	21-23	Frequency (Fr)	Probability (Pr)	Avoidance (Av)
Irreversible Trauma or Death (Fatal Physical Injury)	8						Hourly 5	Common 5	
Concussion or external bleeding	6						Daily 5	Likely 4	
Repairable; Broken Bones	3						Weekly 4	Possible 3	Impossible 5
Minor Bruising	1						Yearly 3	Rarely 2	Possible 3
No Injury	0						Less 2	Negligible 1	Likely 1

Shock Consequences	Severity (Se)	Risk Class (Rc) 4-5	6-10	11-15	16-20	21-23	Frequency (Fr)	Probability (Pr)	Avoidance (Av)
Electrocution –Irreversible Trauma or Death (Fatality)	8						Hourly 5	Common 5	
Heart Fibrillation 75-250mA	6						Daily 5	Likely 4	
Breathing Difficulty, 30mA	3						Weekly 4	Possible 3	Impossible 5
Pain, 1-10mA	1						Yearly 3	Rarely 2	Possible 3
0 mA	0						Less 2	Negligible 1	Likely 1

Work Task #	Electrical Hazard	Se	Fr	Pr	Av	Risk Class (Rc)	Inherent Risk (Rl)	Preventive & Protective Control Measure Applied	Residual Risk (Rr)
1IHR	Arc Flash					0			N/A
1IHR	Arc Blast					0			N/A
1IHR	Shock					0			N/A
1RAP	Arc Flash					0	N/A		
1RAP	Arc Blast					0	N/A		
1RAP	Shock					0	N/A		
2IHR	Arc Flash					0			N/A
2IHR	Arc Blast					0			N/A
2IHR	Shock					0			N/A
2RAP	Arc Flash					0	N/A		
2RAP	Arc Blast					0	N/A		
2RAP	Shock					0	N/A		

Comments:

Project Reference: COV ELECTRICAL SAFETY PROGRAM Document: COV RAP RRT Date: Jan 25, 2018
Page 1 of 1
 Rev 2.4 ALL 2018

APPENDIX F. ARC FLASH AND SHOCK RISK ASSESSMENT FLOW CHART TABLE METHOD

Figure F-5 – Arc Flash and Shock Risk Assessment Flow Chart Table Method

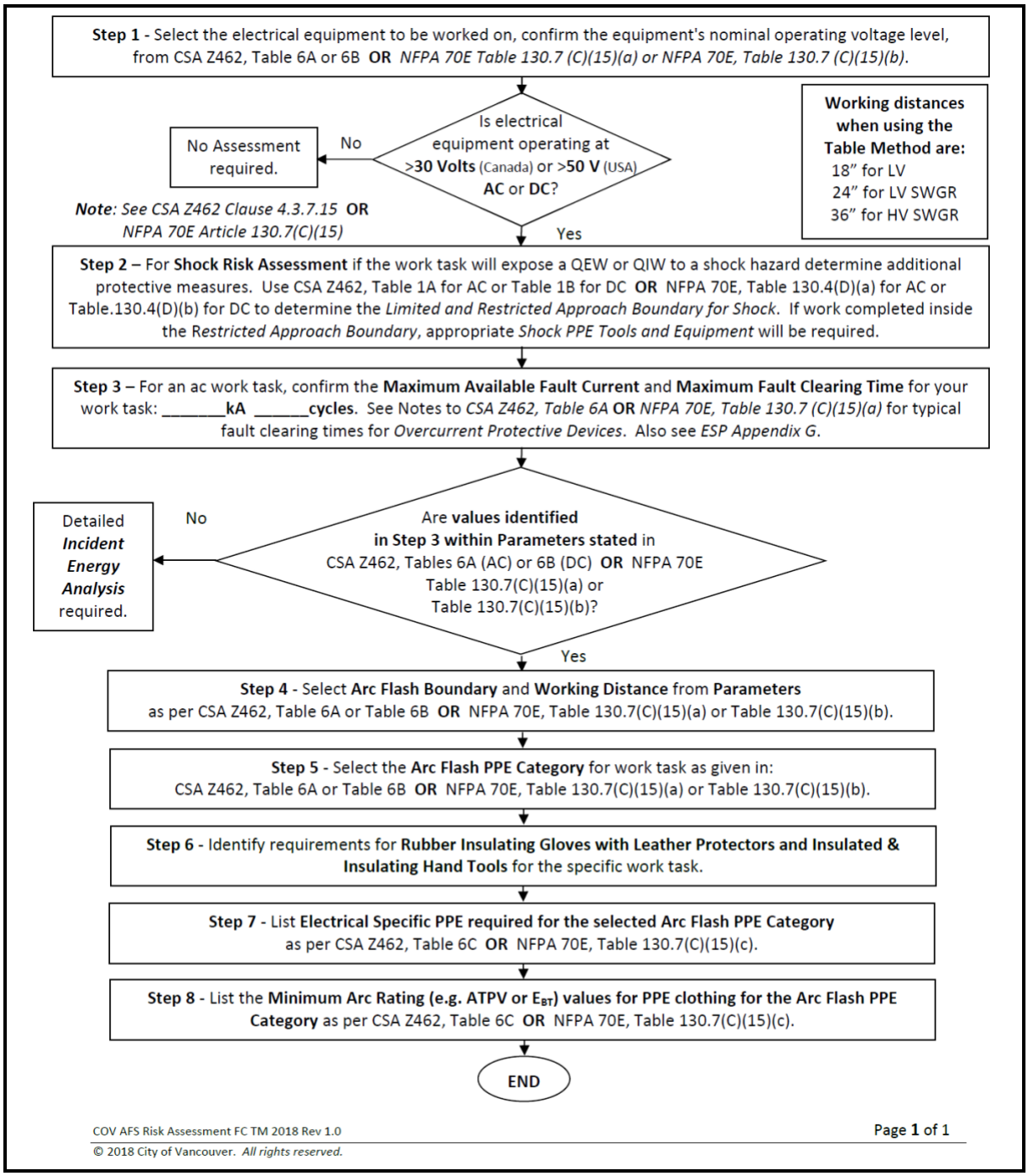

APPENDIX G. ARC FLASH & SHOCK RISK ASSESSMENT PROCEDURE FORM – TABLE METHOD OR DETAILED LABEL

Form #: ESP0003

This form can be used to facilitate *Arc Flash and Shock Risk Assessment* as outlined in *CSA Z462* or *NFPA 70E* and assist in identifying and documenting additional protective measures to reduce risk which include, *Boundaries of Approach* and appropriate *Electrical Specific PPE, Tools & Equipment* for the *energized electrical Work Task*.

Reference tables are included for protective device operating times (based on manufacturer's typical *Time Current Curves* and as outlined in *IEEE 1584*) and transformer and generator maximum available fault current look up tables (e.g. with Infinite Utility Bus assumed, no cable impedance and no motor fault current contribution) to assist the Qualified Electrical Worker (QEW) in completing the form related to the *Arc Flash PPE Category Table Method of Arc Flash Risk Assessment*. The intent is that the QEW is not required to complete any *engineering incident energy analysis related calculations*. In order to use the *Arc Flash PPE Category tables* the QEW must confirm the *voltage source* (e.g. transformer or generator) and the *capacity of the source*. The *simple formula* used to calculate the *maximum available fault current* is provided in the Notes to the Tables illustrated below.

When using the *maximum available fault current Tables* if the *transformer impedances* in %Z cannot be verified then 5% should be used based on typical data for power transformers. Where the transformer is a lighting transformer the impedance may be between 3-5%, 4% can be used. For generators if the sub-transient reactance (e.g. Xd") cannot be confirmed *IEEE Standards* recommend using a value of 9% as a conservative value for maximum available fault current.

The attached form is a *"procedural" based form*, the QEW follows the sequential steps and in so doing will be led through completing an arc flash and shock *risk assessment* for an *energized electrical work task*. This is one element of the overall *Risk Assessment Procedure*.

ESP0003 – Arc Flash & Shock Risk Assessment Procedure Form

Work Task Description:	**Date:**
Equipment Tag & Description:	**Maximum Working Voltage:**
Work Location:	**Name:**
Work Order #:	**Upstream Protective Device Type:**

#	✔ Completed	Procedure Step Description	Yes	No
1.	☐	Is the electrical equipment operating at more than 30 Volts (Canada) or 50 Volts AC or DC (USA)(e.g. worker exposed to *energized electrical conductors or circuit parts*)? If "**Yes**", complete this *Arc Flash and Shock Risk Assessment Form*; otherwise the completion of this form is not required. **Voltage = _____ V**	Y	N
2.	☐	***Shock Risk Assessment:*** An *Electrically Safe Work Condition* could not be established and a Qualified Electrical Worker may be at risk based on inadvertent movement and coming in contact or proximity to *exposed energized conductors or circuit parts*. Determine and record the *Shock Approach Boundaries* from *CSA Z462-2018 Table 1A or Table 1B or NFPA 70E-2018 Table 130.4(D)(a) or Table 130.4(D)(b)*. ***Limited Approach Boundary*: _____ inches / metres** ***Restricted Approach Boundary*: _____ inches / metres** *Electrical Specific PPE, Tools & Equipment for shock* will be documented later in this procedure.	Y	N
3.	☐	***Arc Flash Risk Assessment:*** Has an ***Engineering Based Incident Energy Analysis*** *(EIEA)* been performed and *detailed Arc Flash & Shock Equipment Labels* installed?	Y	N
4.	☐	***Engineering Incident Energy Analysis (EIEA):*** Record any *engineering based incident energy analysis results* from the *detailed Arc Flash & Shock Warning Equipment Label or Results Tables when provided*: ***Arc Flash Boundary*: _____ inches / metres** ***Assumed Working Distance*: _____ inches / metres** ***Incident Energy Level*: _____ cal/cm^2** If an *engineering based incident energy analysis* has NOT been performed complete **Steps 5 to 7** (e.g. *CSA Z462-2018* or *NFPA 70E-2018 Arc Flash PPE Category Table Method*). If an *engineering based incident energy analysis* has been performed, go to **Step 8**.	***Working Distance*:** • 18" LV • 24" LV SWGR • 36" HV SWGR	
5.	☐	***Arc Flash PPE Category Table Method:*** Determine the *maximum available fault current* and *maximum fault clearing time* of the *upstream protective device*. (e.g. circuit breaker or fused disconnect switch) for your *work task*: **_____ kA _____ cycles** ***Note:*** *As per the **Parameters** in CSA Z462-2018 Tables 6A* for AC or *Table 6B* for DC *or NFPA 70E-2018 Tables 130.7(C)(15)(a) for AC or Table 130.7(C)(15)(b) for DC the **maximum available fault current** must be _____ **kA** or less with _____ **cycles maximum fault clearing time** or less for the Arc Flash PPE Category Table Method to be applicable. If either value exceeds these values, then the incident energy must be calculated see your Supervisor.*	Transformer: **_____kVA** Transformer: **_____%Z**	

Arc Flash and Shock Risk Assessment Procedure Form, cont'd

#	✔ Completed	Procedure Step Description		Yes	No
6.	☐	Additional Protective Measures, determine the ***Arc Flash Boundary (AFB).*** See the **Parameters** in *CSA Z462-2018 Tables 6A and 6B* or *NFPA 70E-2018 Tables 130.7(C)(15)(a) and 130.7(C)(15)(b).* ***Arc Flash Boundary*: _____ inches / metres**			
7.	☐	Select the appropriate ***Arc Flash PPE Category*** for the *work task* from *CSA Z462-2018 Table 6A or 6B* or *NFPA 70E-2018 Table 130.7(C)(15)(a) or 130.7(C)(15)(b).* Additional Protective Measures, select the ***Working Distance*** from ***Parameters*** from *CSA Z462-2018 Tables 6A and 6B* or *NFPA 70E Tables 130.7(C)(15)(a) and 130.7(C)(15)(b).* ***Arc Flash PPE Category*: _____ *Working Distance*: _____ inches / metres**			
8.	☐	***Shock Risk Assessment - Additional Protective Measures:*** Are *rubber insulating gloves with leather protectors* required as your hands will be entering the *Restricted Approach Boundary*?	***RIG Glove Class # =* _____**	Y	N
9.	☐	***Shock Risk Assessment - Additional Protective Measures:*** Are *insulated or insulating hand tools* required or *insulated test equipment*?		Y	N
10.	☐	Additional Protective Measures, indicate the ***minimum arc rating of clothing*** to be worn while performing the required *work task* (e.g. *ATPV* or E_{BT}) based on the calculated *incident energy* at the assumed *Working Distance* (e.g. **Step 4** above or information taken from the *detailed Arc Flash & Shock Warning Equipment Label or Results Table*). Refer to *CSA Z462 Table 3 PPE* to select *Arc Flash PPE* based on 2-Level system, 1.2 cal/cm^2 to 12 cal/cm^2 *ATPV* or E_{BT}, or greater than 12 cal/cm^2 *ATPV* or E_{BT}. **Or** Determine **arc rating of required protective clothing based the selected Arc Flash PPE Category** (e.g. **Step 7** above or use *CSA Z462-2018 Table 6C* or *NFPA 70E-2018 Table 130.7(C)(15)(c)*). **Minimum _____ cal/cm^2**			
11.	☐	Additional Protective Measures, list ***Electrical Specific PPE, Tools & Equipment*** required for the *work task* based on *incident energy* at the *assumed Working Distance* **or** for the selected *Arc Flash PPE Category* (e.g. use *CSA Z462-2018, Table 6C* or *NFPA 70E-2018, Table 130.7 (C)(15)(c)* when using the *Arc Flash PPE Category Table Method*). **Select clothing to cover the entire body** (e.g. shirt & pants or coveralls with *arc-rated face shield* with *arc-rated balaclava* or 12 cal/cm^2 *arc flash suit hood*, *arc flash suit*, protection for hands, etc.). Select *shock PPE, Tools & Equipment* based on maximum *voltage* and *work task*. List the *PPE, Tools & Equipment* required for the *work task*: _____ _____ _____ _____ _____ _____ _____ _____ _____ _____ _____ _____ ***Note**: Approved safety glasses and hearing protection are required underneath the arc-rated face shield or arc flash suit hood. An Arc rated Balaclava is required under the arc-rated face shield, except for Arc Flash PPE Category 1. The Electrical Safety Program requires that an arc-rated balaclava be worn whenever an arc-rated faceshield is required as Level 1 arc-rated PPE.*			

Completed by: **Date:**

_____ _____
Signature

The following tables can be used to confirm for the *energized electrical work task* being completed that the *maximum available fault current* and *maximum fault clearing time* are less than or equal to the Parameters listed in the *Arc Flash PPE Category tables* for the *electrical equipment, voltage* and *work task* listed.

Table G-1
Protective Device Operating Times

Breaker Rating and Type[a]	Opening time at 60 Hz (cycles)	Opening time (seconds)
Low voltage (molded case) (< 1000 V) (integral trip)	1.5	0.025
Low voltage (insulated case) (< 1000 V) power circuit breaker (integral trip or relay operated)	3.0	0.050
Medium voltage (1-35 kV)	5.0	0.080
Some high voltage (> 35 kV)	8.0	0.130
Class J Current Limiting Fuse	0.25	0.004
Arc Flash Relay Response Time	0.06 to 0.6[b]	0.001 to 0.010[b]

[a] *The Opening Times included in this Table do not include the external relay response time.*
[b] *Relay response time range provided based on published manufacturer's data, five manufacturers' available when this data was listed.*

Notes:

1. *This information is referenced from IEEE 1584-2002 Table 1, IEEE Color Books and manufacturer's published data. Relay response times depend on the type of relay and protection settings. Breaker's trip unit response time depends on type of trip unit and manufacturer. Typical response time of trip unit or digital relay is ½ to 1 cycle. Refer to manufacturer's data for specific information.*
2. *Typical current limiting fuses, (J class for example) have a clearing time of about ¼ cycles (0.004 sec). For fuses, refer to manufacturer's specific information.*
3. *This table is valid only when breakers or fuses are assumed to be tripping in their instantaneous regions. If breakers are tripping in the long time or short time region, response time can be much higher than listed in above table. This depends on the maximum available fault current and breaker settings.*
4. *The opening times and overall performance of protective devices as listed above is dependent on minimum maintenance as per manufacturer's requirements and industry accepted best practices (e.g. NFPA 70B Recommended Practice for Electrical Equipment Maintenance, and ANSI/NETA MTS Standard for Maintenance Testing Specifications for Electrical Power Distribution Equipment and Systems).*

Table G-2
208 VAC Transformer Available Fault Current Table

Three Phase Transformer – 208 VAC (V) Secondary								
KVA	**FLC (Amps)**	**Percent Impedance, Z**						
		1.0%	**2.0%**	**3.0%**	**4.0%**	**5.0%**	**6.0%**	**7.0%**
		I_{sc}, Maximum Available Three Phase Available Fault Current (X 1000 Amps)						
30	83	8.3	4.2	2.8	2.1	1.7	1.4	1.2
45	125	12.5	6.3	4.2	3.1	2.5	2.1	1.8
75	208	20.8	10.4	6.9	5.2	4.2	3.5	3.0
100	278	27.8	13.9	9.3	7.0	5.6	4.6	4.0
150	417	41.7	20.9	13.9	10.4	8.3	7.0	6.0
225	625	62.5	31.3	20.8	15.6	12.5	10.4	8.9
300	834	83.4	41.7	27.8	20.9	16.7	13.9	11.9
500	1390	139.0	69.5	46.3	34.8	27.8	23.2	19.9
750	2084	208.4	104.2	69.5	52.1	41.7	34.7	29.8
1000	2799	277.9	139.0	92.6	69.5	55.6	46.3	39.7

***Note**: The information contained in the table above assumes an infinite bus at the transformer primary, utility supply data, motor contribution, and cable impedance information has been neglected. A detailed engineering Available Fault Current Study would provide the actual theoretical maximum available fault current taking these variables into consideration. The available fault currents listed above would be the maximum let-through value of the transformers. As per the calculations in IEEE 1584, arcing current is typically about 65% to 85% of the available three phase bolted fault current, depending on the voltage. A lower actual available fault current may not allow for the upstream protective device to clear the abnormal electrical condition that could lead to an arcing fault and arc flash. Calculation formula for above table values: I_{sc} = (kVA x 1000) / {(V x 1.73) x (Z x 0.01)}.*

Table G-3
480 VAC Transformer Available Fault Current Table

Three Phase Transformer – 480 VAC (V) Secondary								
KVA	**FLC (Amps)**	**Percent Impedance, Z**						
		1.0%	**2.0%**	**3.0%**	**4.0%**	**5.0%**	**6.0%**	**7.0%**
		I_{sc}, Maximum Available Three Phase Available Fault Current (X 1000 Amps)						
100	120	12.0	6.0	4.0	3.0	2.4	2.0	1.7
150	180	18.0	9.0	6.0	4.5	3.6	3.0	2.6
225	271	27.1	13.5	9.0	6.8	5.4	4.5	3.9
300	361	36.1	18.0	12.0	9.0	7.2	6.0	5.2
500	602	60.2	30.1	20.1	15.1	12.0	10.0	8.6
750	903	90.3	45.2	30.1	22.6	18.1	15.1	12.9
1000	1204	120.4	60.2	40.1	30.1	24.1	20.1	17.2
1500	1806	180.6	90.3	60.2	45.2	36.1	30.1	25.8
2000	2408	240.8	120.4	80.3	60.2	48.2	40.1	34.4
2500	3010	301.0	150.5	100.3	75.3	60.2	50.2	43.0
3000	3612	361.2	180.6	120.4	90.3	72.2	60.2	51.6

***Note**: The information contained in the table above assumes an infinite bus at the transformer primary, utility supply data, motor contribution, and cable impedance information has been neglected. A detailed engineering Available Fault Current Study would provide the actual theoretical maximum available fault current taking these variables into consideration. The available fault current listed above would be the maximum let-through value of the transformers. As per the calculations in IEEE 1584, arcing current is typically about 65% to 85% of the available three phase bolted fault current, depending on the voltage. A lower actual available fault current may not allow for the upstream protective device to clear the abnormal electrical condition that could lead to an arcing fault and arc flash. Calculation formula for above table values: I_{sc} = (kVA x 1000) / {(V x 1.73) x (Z x 0.01)}.*

Table G-4
600 VAC Transformer Available Fault Current Table

Three Phase Transformer – 600 VAC (V) Secondary								
KVA	**FLC (Amps)**	**Percent Impedance, Z**						
		1.0%	**2.0%**	**3.0%**	**4.0%**	**5.0%**	**6.0%**	**7.0%**
		I_{sc}, Maximum Available Three Phase Available Fault Current (X 1000 Amps)						
100	96	9.6	4.8	3.2	2.4	1.9	1.6	1.4
150	145	14.5	7.2	4.8	3.6	3.0	2.4	2.1
225	217	21.7	10.9	7.2	5.4	4.3	3.6	3.1
300	289	28.9	14.5	9.6	7.2	5.8	4.8	4.1
500	482	48.2	24.1	16.1	12.1	9.6	8.0	6.9
750	723	72.3	36.2	24.1	18.1	14.5	12.1	10.3
1000	963	96.3	48.2	32.1	24.1	19.3	16.1	13.8
1500	1445	144.5	72.3	48.2	36.1	28.9	24.1	20.6
2000	1927	192.7	96.4	64.2	48.2	38.5	32.1	27.5
2500	2408	240.8	120.4	80.3	60.2	48.2	40.1	34.4
3000	2890	289.0	144.5	96.3	72.3	57.8	48.2	41.3

***Note**: The information contained in the table above assumes an infinite bus at the transformer primary, utility supply data, motor contribution, and cable impedance information has been neglected. A detailed engineering Available Fault Current Study would provide the actual theoretical maximum available fault current taking these variables into consideration. The available fault current listed above would be the maximum let-through value of the transformers. As per the calculations in IEEE 1584, arcing current is typically about 65% to 85% of the available three phase bolted fault current, depending on the voltage. A lower actual available fault current may not allow for the upstream protective device to clear the abnormal electrical condition that could lead to an arcing fault and arc flash. Calculation formula for above table values: I_{sc} = (kVA x 1000) / {(V x 1.73) x (Z x 0.01)}.*

Table G-5
4,160 VAC Transformer Available Fault Current Table

Three Phase Transformer – 4,160 VAC (V) Secondary								
KVA	FLC (Amps)	Percent Impedance, Z						
		1.0%	2.0%	3.0%	4.0%	5.0%	6.0%	7.0%
		I_{sc}, Maximum Available Three Phase Available Fault Current (X 1000 Amps)						
100	14	1.4	0.7	0.5	0.3	0.3	0.2	0.2
150	21	2.1	1.0	0.7	0.5	0.4	0.3	0.3
225	31	3.1	1.6	1.0	0.8	0.6	0.5	0.4
300	42	4.2	2.1	1.4	1.0	0.8	0.7	0.6
500	69	6.9	3.5	2.3	1.7	1.4	1.2	1.0
750	104	10.4	5.2	3.5	2.6	2.1	1.7	1.5
1000	139	13.9	6.9	4.6	3.5	2.8	2.3	2.0
1500	208	20.8	10.4	6.9	5.2	4.2	3.5	3.0
2000	278	27.8	13.9	9.3	6.9	5.6	4.6	4.0
2500	347	34.7	17.4	11.6	8.7	6.9	5.8	5.0
3000	417	41.7	20.8	13.9	10.4	8.3	6.9	6.0
5000	694	69.4	34.7	23.2	17.4	13.9	11.6	9.9
7500	1041	104.1	52.1	34.7	26.1	20.8	17.4	14.9
10000	1388	138.8	69.5	46.3	34.7	27.8	23.2	19.9

***Note**: The information contained in the table above assumes an infinite bus at the transformer primary, utility supply data, motor contribution, and cable impedance information has been neglected. A detailed engineering Available Fault Current Study would provide the actual theoretical maximum available fault current taking these variables into consideration. The available fault current listed above would be the maximum let-through value of the transformers. As per the calculations in IEEE 1584, arcing current is typically about 65% to 85% of the available three phase bolted fault current, depending on the voltage. A lower actual available fault current may not allow for the upstream protective device to clear the abnormal electrical condition that could lead to an arcing fault and arc flash. Calculation formula for above table values: I_{sc} = (kVA x 1000) / {(V x 1.73) x (Z x 0.01)}.*

Note:

The tables presented below can be used to confirm for the *energized electrical Work Task* being completed that the *maximum available fault current* and *maximum fault clearing time* are less than or equal to the Parameters listed in the *Arc Flash PPE Category table* for the *electrical equipment, voltage* and *work task* listed. If you do not have the Utility Power Transformer impedance in %Z then use 5% as this will provide a reasonable result based on actual impedances. For generators is you cannot confirm the sub-transient reactance then use 9% as identified by *IEEE Standards* as a conservative value to use.

Table G-6
13,800 VAC Transformer Available Fault Current Table

Three Phase Transformer – 13,800 VAC (V) Secondary								
KVA	FLC (Amps)	Percent Impedance, Z						
		1.0%	2.0%	3.0%	4.0%	5.0%	6.0%	7.0%
		I_{sc}, Maximum Available Three Phase Bolted Available Fault Current (X 1000 Amps)						
100	4	0.4	0.2	0.1	0.1	0.1	0.1	0.1
150	6	0.6	0.3	0.2	0.2	0.1	0.1	0.1
225	9	0.9	0.5	0.3	0.2	0.2	0.2	0.1
300	13	1.3	0.6	0.4	0.3	0.3	0.2	0.2
500	21	2.1	1.0	0.7	0.5	0.4	0.3	0.3
750	31	3.1	1.6	1.0	0.8	0.6	0.5	0.4
1000	42	4.2	2.1	1.4	1.0	0.8	0.7	0.6
1500	63	6.3	3.1	2.1	1.6	1.3	1.0	0.9
2000	84	8.4	4.2	2.8	2.1	1.7	1.4	1.2
2500	105	10.5	5.2	3.5	2.6	2.1	1.7	1.5
3000	126	12.6	6.3	4.2	3.1	2.5	2.1	1.8
5000	209	20.9	10.5	7.0	5.2	4.2	3.5	3.0
7500	314	31.4	15.7	10.5	7.8	6.3	5.2	4.5
10000	418	41.9	20.9	14.0	10.5	8.4	7.0	6.0

***Note**: The information contained in the table above assumes an infinite bus at the transformer primary, utility supply data, motor contribution, and cable impedance information has been neglected. A detailed engineering Available Fault Current Study would provide the actual theoretical maximum available fault current taking these variables into consideration. The available fault current listed above would be the maximum let-through value of the transformers. As per the calculations in IEEE 1584, arcing current is typically about 65% to 85% of the available three phase bolted fault current, depending on the voltage. A lower actual available fault current may not allow for the upstream protective device to clear the abnormal electrical condition that could lead to an arcing fault and arc flash. Calculation formula for above table values: I_{sc} = (kVA x 1000) / {(V x 1.73) x (Z x 0.01)}.*

Table G-7
208 VAC Generator Available Fault Current Lookup Table

Danatec

			208V														
										X"d							
	Power Factor		6%	7%	8%	9%	10%	11%	12%	13%	14%	15%	16%	17%	18%	19%	20%
kW	(%)	FLA	Momentary (1 cycle) 3-Phase Bolted Symmetrical Fault Current (Amps)														
20	80	69	1157	991	867	771	694	631	578	534	496	463	434	408	386	365	347
30	80	104	1735	1487	1301	1157	1041	946	867	801	744	694	651	612	578	548	520
45	80	156	2602	2231	1952	1735	1561	1419	1301	1201	1115	1041	976	918	867	822	781
60	80	208	3470	2974	2602	2313	2082	1893	1735	1601	1487	1388	1301	1225	1157	1096	1041
80	80	278	4626	3965	3470	3084	2776	2523	2313	2135	1983	1851	1735	1633	1542	1461	1388
100	80	347	5783	4957	4337	3855	3470	3154	2891	2669	2478	2313	2169	2041	1928	1826	1735
175	80	607	10120	8674	7590	6747	6072	5520	5060	4671	4337	4048	3795	3572	3373	3196	3036
200	80	694	11566	9914	8674	7711	6940	6309	5783	5338	4957	4626	4337	4082	3855	3652	3470
230	80	798	13301	11401	9976	8867	7980	7255	6650	6139	5700	5320	4988	4694	4434	4200	3990
250	80	867	14457	12392	10843	9638	8674	7886	7229	6673	6196	5783	5421	5103	4819	4565	4337
300	80	1041	17349	14870	13012	11566	10409	9463	8674	8007	7435	6940	6506	6123	5783	5479	5205
400	80	1388	23132	19827	17349	15421	13879	12617	11566	10676	9914	9253	8674	8164	7711	7305	6940
500	80	1735	28915	24784	21686	19276	17349	15772	14457	13345	12392	11566	10843	10205	9638	9131	8674
600	80	2082	34698	29741	26023	23132	20819	18926	17349	16014	14870	13879	13012	12246	11566	10957	10409
750	80	2602	43372	37176	32529	28915	26023	23657	21686	20018	18588	17349	16264	15308	14457	13696	13012
1000	80	3470	57829	49568	43372	38553	34698	31543	28915	26690	24784	23132	21686	20410	19276	18262	17349
2000	80	6940	115658	99136	86744	77106	69395	63086	57829	53381	49568	46263	43372	40821	38553	36524	34698

***Note**: The available fault current calculated above is three-phase momentary (one cycle) symmetrical available fault current at the generator terminal. The motor contribution and cable impedance information has been neglected. A detailed engineering Available Fault Current Study would provide the actual theoretical maximum available fault current taking these variables into consideration. The available fault current listed above would be the maximum available fault current based on Subtransient Reactance (X"d) of the generator and it will decay rapidly. As per the calculations in IEEE 1584, arcing current can be very low compared to three-phase bolted fault current, depending on the voltage. A lower actual available fault current may not allow for the upstream protective device to clear the abnormal electrical condition that could lead to an arcing fault and arc flash. Calculation formula for above table values: I_{sc} = (kVA x 1000) / {(V x 1.732) x (X"d (%)x 0.01)}.*

Table G-8
480 VAC Generator Available Fault Current Lookup Table

Danatec

			480V														
			X"d														
			6%	7%	8%	9%	10%	11%	12%	13%	14%	15%	16%	17%	18%	19%	20%
kW	Power Factor (%)	FLA	Momentary (1 cycle) 3-Phase Bolted Symmetrical Fault Current (Amps)														
20	80	30	501	430	376	334	301	273	251	231	215	200	188	177	167	158	150
30	80	45	752	644	564	501	451	410	376	347	322	301	282	265	251	237	226
45	80	68	1128	967	846	752	677	615	564	520	483	451	423	398	376	356	338
60	80	90	1504	1289	1128	1002	902	820	752	694	644	601	564	531	501	475	451
80	80	120	2005	1718	1504	1336	1203	1093	1002	925	859	802	752	708	668	633	601
100	80	150	2506	2148	1879	1671	1504	1367	1253	1157	1074	1002	940	884	835	791	752
175	80	263	4385	3759	3289	2924	2631	2392	2193	2024	1879	1754	1645	1548	1462	1385	1316
200	80	301	5012	4296	3759	3341	3007	2734	2506	2313	2148	2005	1879	1769	1671	1583	1504
230	80	346	5764	4940	4323	3842	3458	3144	2882	2660	2470	2305	2161	2034	1921	1820	1729
250	80	376	6265	5370	4699	4177	3759	3417	3132	2891	2685	2506	2349	2211	2088	1978	1879
300	80	451	7518	6444	5638	5012	4511	4101	3759	3470	3222	3007	2819	2653	2506	2374	2255
400	80	601	10024	8592	7518	6682	6014	5467	5012	4626	4296	4009	3759	3538	3341	3165	3007
500	80	752	12530	10740	9397	8353	7518	6834	6265	5783	5370	5012	4699	4422	4177	3957	3759
600	80	902	15036	12888	11277	10024	9021	8201	7518	6940	6444	6014	5638	5307	5012	4748	4511
750	80	1128	18795	16110	14096	12530	11277	10252	9397	8674	8055	7518	7048	6633	6265	5935	5638
1000	80	1504	25059	21479	18795	16706	15036	13669	12530	11566	10740	10024	9397	8844	8353	7913	7518
2000	80	3007	50119	42959	37589	33412	30071	27337	25059	23132	21479	20047	18795	17689	16706	15827	15036

***Note**: The available fault current calculated above is three-phase momentary (one cycle) symmetrical available fault current at the generator terminal. The motor contribution and cable impedance information has been neglected. A detailed engineering Available Fault Current Study would provide the actual theoretical maximum available fault current taking these variables into consideration. The available fault current listed above would be the maximum available fault current based on Subtransient Reactance (X"d) of the generator and it will decay rapidly. As per the calculations in IEEE 1584, arcing current can be very low compared to three-phase bolted current, depending on the voltage. A lower actual available fault current may not allow for the upstream protective device to clear the abnormal electrical condition that could lead to an arcing fault and arc flash. Calculation formula for above table values: I_{sc} = (kVA x 1000) / {(V x 1.732) x (X"d (%)x 0.01)}.*

Table G-9
600 VAC Generator Available Fault Current Lookup Table

Danatec

			600V														
			X"d														
	Power Factor		6%	7%	8%	9%	10%	11%	12%	13%	14%	15%	16%	17%	18%	19%	20%
kW	(%)	FLA	Momentary (1 cycle) 3-Phase Bolted Symmetrical Fault Current (Amps)														
20	80	25	418	359	314	279	251	228	209	193	179	167	157	148	139	132	126
30	80	38	628	538	471	418	377	342	314	290	269	251	235	221	209	198	188
45	80	56	941	807	706	628	565	513	471	434	403	377	353	332	314	297	282
60	80	75	1255	1076	941	837	753	685	628	579	538	502	471	443	418	396	377
80	80	100	1674	1434	1255	1116	1004	913	837	772	717	669	628	591	558	528	502
100	80	126	2092	1793	1569	1395	1255	1141	1046	965	897	837	784	738	697	661	628
175	80	220	3661	3138	2746	2441	2197	1997	1830	1690	1569	1464	1373	1292	1220	1156	1098
200	80	251	4184	3586	3138	2789	2510	2282	2092	1931	1793	1674	1569	1477	1395	1321	1255
230	80	289	4811	4124	3609	3208	2887	2624	2406	2221	2062	1925	1804	1698	1604	1519	1443
250	80	314	5230	4483	3922	3487	3138	2853	2615	2414	2241	2092	1961	1846	1743	1652	1569
300	80	377	6276	5379	4707	4184	3765	3423	3138	2896	2690	2510	2353	2215	2092	1982	1883
400	80	502	8368	7172	6276	5578	5021	4564	4184	3862	3586	3347	3138	2953	2789	2642	2510
500	80	628	10460	8965	7845	6973	6276	5705	5230	4827	4483	4184	3922	3692	3487	3303	3138
600	80	753	12551	10758	9414	8368	7531	6846	6276	5793	5379	5021	4707	4430	4184	3964	3765
750	80	941	15689	13448	11767	10460	9414	8558	7845	7241	6724	6276	5883	5537	5230	4955	4707
1000	80	1255	20919	17931	15689	13946	12551	11410	10460	9655	8965	8368	7845	7383	6973	6606	6276
2000	80	2510	41838	35861	31379	27892	25103	22821	20919	19310	17931	16735	15689	14766	13946	13212	12551

***Note**: The available fault current calculated above is three-phase momentary (one cycle) symmetrical available fault current at the generator terminal. The motor contribution and cable impedance information has been neglected. A detailed engineering Available Fault Current Study would provide the actual theoretical maximum available fault current taking these variables into consideration. The available fault current listed above would be the maximum available fault current based on Subtransient Reactance (X"d) of the generator and it will decay rapidly. As per the calculations in IEEE 1584, arcing current can be very low compared to three-phase bolted current, depending on the voltage. A lower actual available fault current may not allow for the upstream protective device to clear the abnormal electrical condition that could lead to an arcing fault and arc flash. Calculation formula for above table values: I_{sc} = (kVA x 1000) / {(V x 1.732) x (X"d (%)x 0.01)}.*

Table G-10
4,160 VAC Generator Available Fault Current Lookup Table

Danatec

			4160V														
			X"d														
			6%	7%	8%	9%	10%	11%	12%	13%	14%	15%	16%	17%	18%	19%	20%
kW	Power Factor (%)	FLA	Momentary (1 cycle) 3-Phase Bolted Symmetrical Fault Current (Amps)														
300	80	52	867	744	651	578	520	473	434	400	372	347	325	306	289	274	260
400	80	69	1157	991	867	771	694	631	578	534	496	463	434	408	386	365	347
500	80	87	1446	1239	1084	964	867	789	723	667	620	578	542	510	482	457	434
600	80	104	1735	1487	1301	1157	1041	946	867	801	744	694	651	612	578	548	520
750	80	130	2169	1859	1626	1446	1301	1183	1084	1001	929	867	813	765	723	685	651
1000	80	173	2891	2478	2169	1928	1735	1577	1446	1335	1239	1157	1084	1021	964	913	867
2000	80	347	5783	4957	4337	3855	3470	3154	2891	2669	2478	2313	2169	2041	1928	1826	1735
2500	80	434	7229	6196	5421	4819	4337	3943	3614	3336	3098	2891	2711	2551	2410	2283	2169
3000	80	520	8674	7435	6506	5783	5205	4731	4337	4004	3718	3470	3253	3062	2891	2739	2602
5000	80	867	14457	12392	10843	9638	8674	7886	7229	6673	6196	5783	5421	5103	4819	4565	4337
7500	80	1301	21686	18588	16264	14457	13012	11829	10843	10009	9294	8674	8132	7654	7229	6848	6506
10000	80	1735	28915	24784	21686	19276	17349	15772	14457	13345	12392	11566	10843	10205	9638	9131	8674

***Note**: The available fault current calculated above is three-phase momentary (one cycle) symmetrical available fault current at the generator terminal. The motor contribution and cable impedance information has been neglected. A detailed engineering Available Fault Current Study would provide the actual theoretical maximum available fault current taking these variables into consideration. The available fault current listed above would be the maximum available fault current based on Subtransient Reactance (X"d) of the generator and it will decay rapidly. As per the calculations in IEEE 1584, arcing current can be very low compared to three-phase bolted current, depending on the voltage. A lower actual available fault current may not allow for the upstream protective device to clear the abnormal electrical condition that could lead to an arcing fault and arc flash. Calculation formula for above table values: I_{sc} = (kVA x 1000) / {(V x 1.732) x (X"d (%)x 0.01)}.*

Table G-11
13,800 VAC Generator Available Fault Current Lookup Table

Danatec

			13800V														
			X"d														
	Power Factor		6%	7%	8%	9%	10%	11%	12%	13%	14%	15%	16%	17%	18%	19%	20%
kW	(%)	FLA	Momentary (1 cycle) 3-Phase Bolted Symmetrical Fault Current (Amps)														
300	80	16	261	224	196	174	157	143	131	121	112	105	98	92	87	83	78
400	80	21	349	299	261	232	209	190	174	161	149	139	131	123	116	110	105
500	80	26	436	374	327	291	261	238	218	201	187	174	163	154	145	138	131
600	80	31	523	448	392	349	314	285	261	241	224	209	196	185	174	165	157
750	80	39	654	560	490	436	392	357	327	302	280	261	245	231	218	206	196
1000	80	52	872	747	654	581	523	475	436	402	374	349	327	308	291	275	261
2000	80	105	1743	1494	1307	1162	1046	951	872	805	747	697	654	615	581	551	523
2500	80	131	2179	1868	1634	1453	1307	1189	1090	1006	934	872	817	769	726	688	654
3000	80	157	2615	2241	1961	1743	1569	1426	1307	1207	1121	1046	981	923	872	826	784
5000	80	261	4358	3736	3269	2905	2615	2377	2179	2011	1868	1743	1634	1538	1453	1376	1307
7500	80	392	6537	5603	4903	4358	3922	3566	3269	3017	2802	2615	2451	2307	2179	2064	1961
10000	80	523	8716	7471	6537	5811	5230	4754	4358	4023	3736	3487	3269	3076	2905	2753	2615
15000	80	784	13074	11207	9806	8716	7845	7132	6537	6034	5603	5230	4903	4615	4358	4129	3922

***Note**: The available fault current calculated above is three-phase momentary (one cycle) symmetrical available fault current at the generator terminal. The motor contribution and cable impedance information has been neglected. A detailed engineering Available Fault Current Study would provide the actual theoretical maximum available fault current taking these variables into consideration. The available fault current listed above would be the maximum available fault current based on Subtransient Reactance (X"d) of the generator and it will decay rapidly. As per the calculations in IEEE 1584, arcing current can be very low compared to three-phase bolted current, depending on the voltage. A lower actual available fault current may not allow for the upstream protective device to clear the abnormal electrical condition that could lead to an arcing fault and arc flash. Calculation formula for above table values: I_{sc} = (kVA x 1000) / {(V x 1.732) x (X"d (%)x 0.01)}.*

APPENDIX H. LABELING SPECIFICATION & SCHEDULE FOR ARC FLASH & SHOCK LABELS & SIGNS

NOTE: This file may require additional edits, including adding a label for referencing [Company] Results Table data.

Table of Contents

List of Figures

List of Tables

1.0 SCOPE

This specification covers the minimum requirements for the design, supply, and application of *Arc Flash & Shock equipment labels* and *signs* for electrical distribution equipment.

This specification also identifies requirements for the application of signs to MCC Building/Room doors and for *Overhead Power Lines*.

The scope of work is to take the results of the *arc flash risk assessment* that is completed by *engineering incident energy analysis studies* or the application of the *CSA Z462 Arc Flash PPE Category Table Method* and define what *detailed Arc Flash & Shock equipment labelling* is applied to electrical distribution equipment and where the labels are to be applied. This document forms a record copy of taking the results of the *engineering incident energy analysis* or *CSA Z462 Arc Flash PPE Category Table Method* and applying labels to the appropriate electrical distribution equipment.

This specification applies to all electrical distribution equipment where *detailed Arc Flash & Shock equipment labelling* is required or other areas where signage is deemed necessary.

2.0 PURPOSE

The purpose of this *specification* is to ensure that consistent labelling occurs on all electrical distribution equipment throughout all areas of the Business Unit, Plant, Facilities or Offices. By ensuring this *specification* and the related *labelling schedule* are implemented we are able to manage *consistent hazard warning labelling and signs for Arc Flash & Shock*. This will provide both staff and contract workers with clarity and effective guidance to decide what appropriate *Electrical Specific PPE, Tools & Equipment* are to be used when performing *energized electrical work tasks*.

3.0 MINIMUM LABEL

Arc Flash labels on electrical distribution equipment are required by *C22.1, Canadian Electrical Code (CEC)* Part 1, Rule 2-306, on new equipment installed. This *minimum label* can be factory of field installed. This rule indicates that certain electrical distribution equipment must be marked with a *minimum arc flash and shock warning equipment label*. There is no mandatory requirement to install an *arc flash and shock label* with detailed arc flash hazard information on it. *CSA Z462, Clause 4.3.5.5* does outline equipment labelling requirements. Labels must be placed and sized so they are visible to personnel before beginning maintenance or inspection work.

C22.1, Canadian Electrical Code (CEC), Part 1, Rule 2-306:

> Rule 2-306 Shock and arc flash protection (see *Appendix B*)
>
> (1) Electrical equipment such as switchboards, panel boards, industrial control panels, meter socket enclosures, and motor control centers that are installed in other than dwelling units and are likely to require examination, adjustment, servicing, or maintenance while energized shall be field marked to warn persons of potential electric shock and arc flash hazards.
>
> (2) The marking referred to in Sub rule (1) is located to be clearly visible to persons before examination, adjustment, servicing, or maintaining the equipment.

No specific *design standard for arc flash and shock equipment labels* is currently available, but the *CSA Z462 Annex Q Arc flash and shock warning labels* can be referred to for general guidance. However, *CEC Part 1*, in *Appendix B*, recognizes that the *ANSI Z535.4 Standard* can be used for generic requirements related to the design of labels or signs:

- The signal word "*DANGER*", in white letters on a red background, signifies the most serious threats. It should be used only in extreme danger cases. Use "*DANGER*" where incident energy is above the *Electrical Safety Program* stipulated *Maximum Allowed Working Incident Energy Level* (e.g. 65 cal/cm^2). This is defined as the highest incident energy level where energized electrical work is authorized for energized electrical work. The signal word "*WARNING*", in black letters on an orange background is for use where *shock and arc flash hazards* may exist.

The example label in Figure H-6 meets the intent of *CEC* and is compliant with the *ANSI Z535.4* Standard.

Figure H-6 – Simple Arc Flash & Shock Warning Label Sample - CEC compliant

The *Simple Arc Flash & Shock Warning equipment label* is legally required to be installed on appropriate electrical distribution equipment as required by the *Jurisdiction Having Authority*. This requirement is not grandfathered to any existing electrical equipment before the 2006 *CEC Part 1* was adopted into law.

Detailed Arc Flash & Shock equipment labels carry additional information beyond the requirements of *CEC Part 1, Rule 2-306* requirements. Workers use this additional

information to make informed decisions for *work planning, work task risk assessments, electrical safe work procedures*, establishing the *Electrical Work Zone* and defining appropriate *Electrical Specific PPE, Tools & Equipment* for a specific *work task*. *CSA Z462* includes requirements for minimum arc flash labels on equipment. This specification will meet or exceed those requirements outlined (e.g. *CSA Z462, Clause 4.3.5.5*). This Appendix outlines requirements that include shock hazard information on all labels. A company can decide to use labels that do not include shock hazard information.

Where *detailed Arc Flash & Shock equipment labels* have not been installed and only a *Simple Arc Flash & Shock Warning equipment label* is installed "*Electrical Hazard Risk Assessment*" will be completed using the *CSA Z462 Arc Flash PPE Category Table Method* to determine the *Arc Flash Boundary*, the *Working Distance* and *Electrical Specific PPE, Tools & Equipment* requirements.

Note: *Detailed Arc Flash & Shock equipment labels are NOT mandatory and are not required to be installed by any applicable law. These detailed labels are installed at the discretion of the electrical distribution equipment owner. The installation of required labels will be determined by the Electrical Safety Program, any questions should be brought to the attention of the Electrical Safety Program Manager and Electrical Safety Steering Committee.*

4.0 DETAILED ARC FLASH & SHOCK WARNING & DANGER LABELS DESIGN

Appropriate information on the *detailed warning label* includes the following:

18. Arc Flash information: *Arc Flash Boundary*, *Working Distance* e.g. 18" for LV MCCs, 24" for LV SWGR, and 36" for HV (e.g. 4,160 V, 13,800 V), and the *Incident Energy level* at the *assumed Working Distance* will reference the *Electrical Safety Program* for more information on arc flash protective clothing requirements.

19. Shock information: *Working Voltage* (e.g. maximum voltage of exposed energized conductors and circuit parts), *Limited and Restricted Approach Boundaries for Shock*. Typically the "*Class*" of *Rubber Insulating Gloves* required is indicated on the label.

20. Equipment Information & Date: The electrical distribution equipment tag and the location that the information on the label applies to should be included on the label. Typically the calculated *incident energy* and *Arc Flash Boundary* apply to either the line or load side of a protective device. The date that the calculation was completed shall be included on the label to ensure that the information can be checked every 5 years as required by *CSA Z462*.

4.1. Detailed Label Design

- *Figure H-2* is a *sample detailed Warning label* that would be installed on Switchgear, MCCs, and other distribution equipment where *arc flash incident energy* is less than the *Maximum Allowed Working Incident Energy Level* stipulated in the *Electrical Safety Program* e.g. 65 cal/cm^2) or less. *Figure H-3* illustrates a *Warning label*, but with the addition of the *Maintenance Mode Switch* indicating the *incident energy* and *arc flash boundary* when the switch OFF or ON.

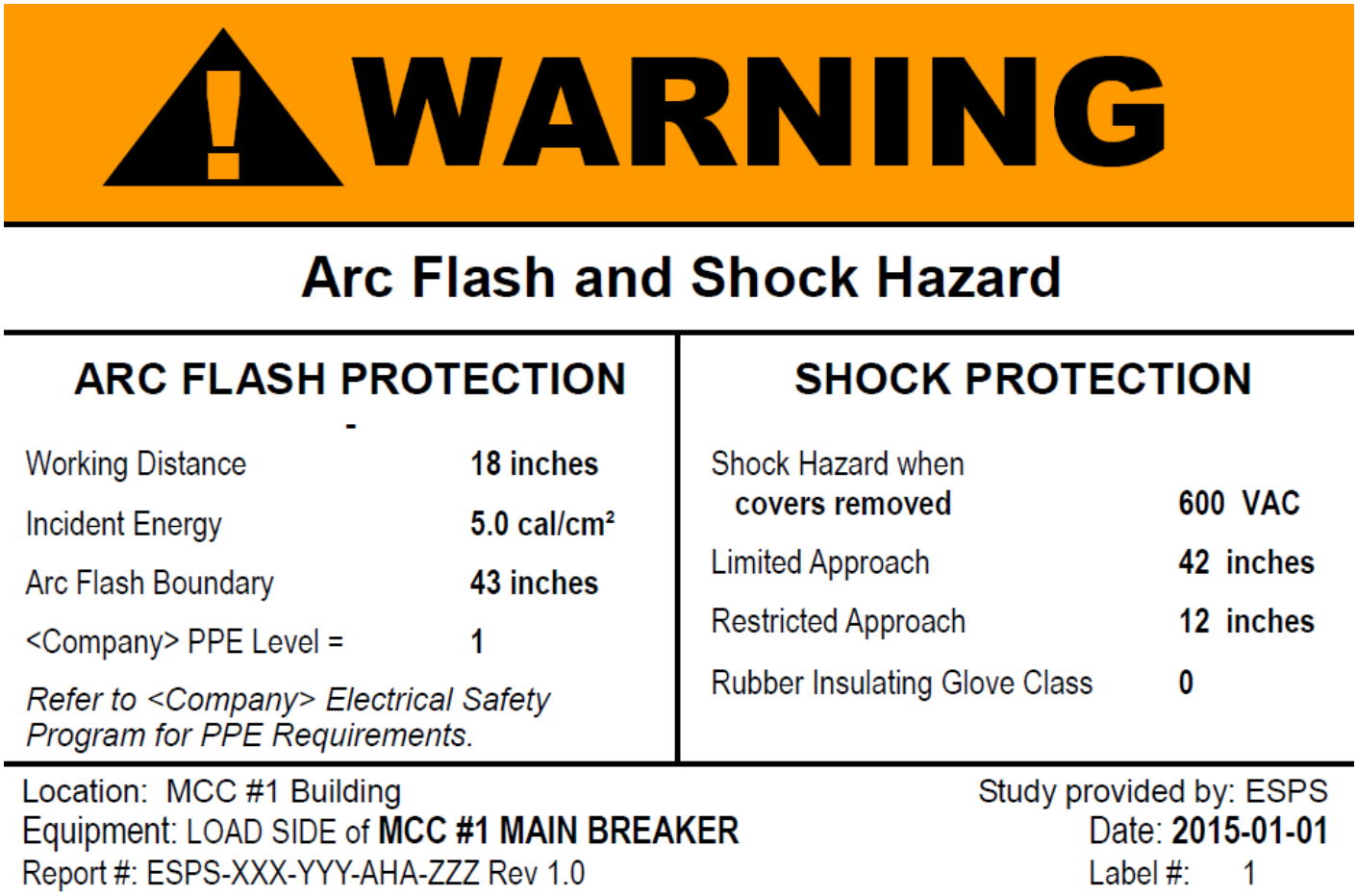

Figure H-7 – Detailed Arc Flash & Shock Warning Label for SWGR/MCC/Electrical Distribution Equipment/ where Incident Energy is 65 cal/cm^2 or less

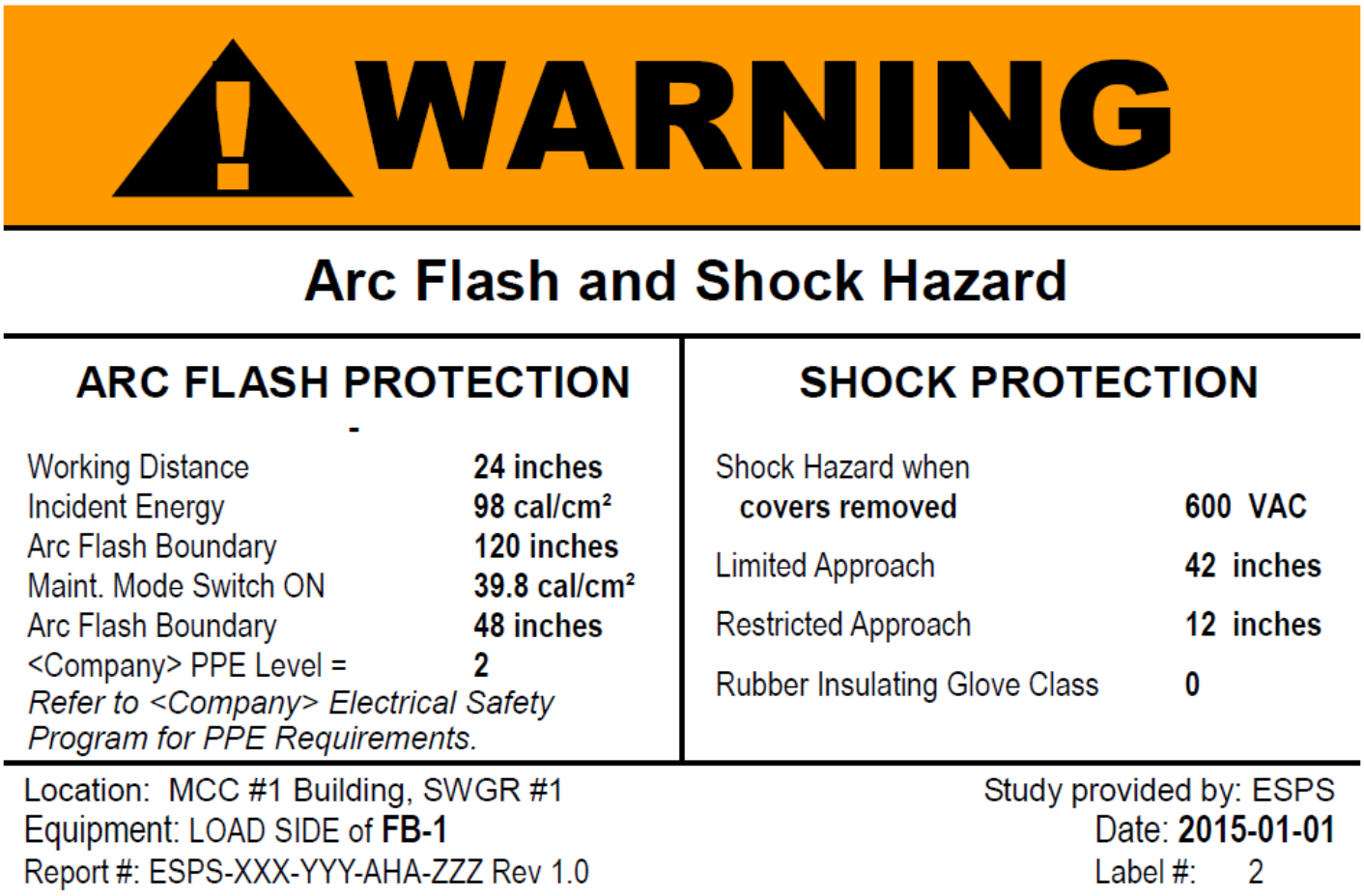

Figure H-8 – Detailed Arc Flash & Shock Warning Label for SWGR/MCC/Electrical Distribution Equipment where Maintenance Mode Switch is ON

Specific label specifications information:

- Label Size: Minimum 4” X 6”.
- Letter Size: “*WARNING*” or “*DANGER*”, are prominent and in upper case. Appropriately size other sections lettering for legibility at 5’.
- Color: All black lettering in the “*WARNING*” section on orange background with remaining sections having white background. For *Danger*, all white lettering on red background.
- Placement: Conspicuously and readily apparent on electrical distribution equipment. Should be placed at eye level on the electrical equipment. Refer to the *labelling schedule section* for specific MCC/SWGR line-up examples.

- The *Figure H-4 sample detailed Danger label* below could be installed on MCCs, distribution equipment and Switchgear where the *arc flash incident energy level* is above the *Maximum Allowed Working Incident Energy Level* defined in the *Electrical Safety Program* (e.g. 65 cal/cm^2).

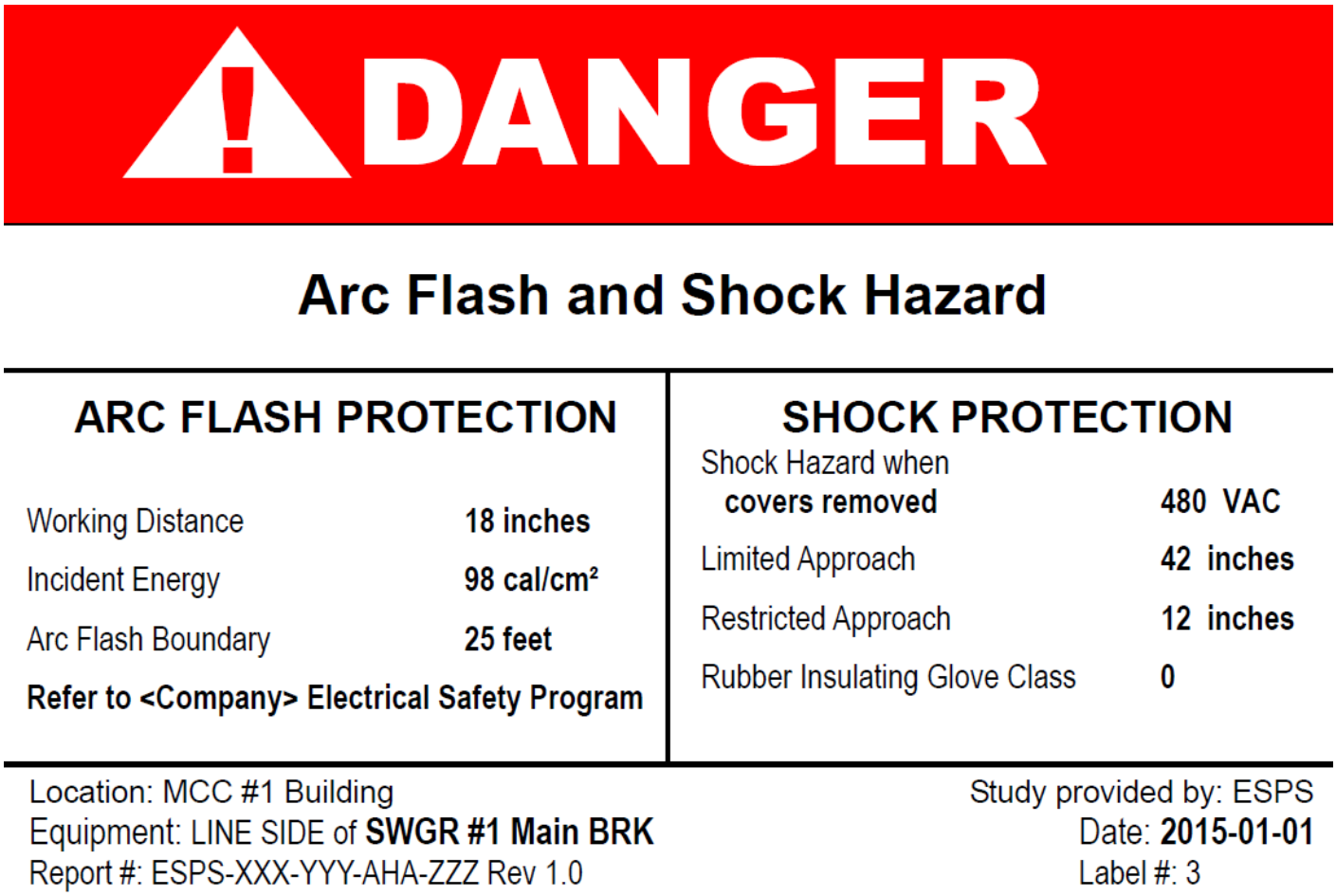

Figure H-9 – Detailed Arc Flash & Shock Danger Label for MCC/SWGR and other distribution equipment where Incident Energy is above Maximum Allowed Working Incident Energy Level stipulated in the Electrical Safety Program

5.0 LABEL PLACEMENT AND LABELLING SCHEDULE

The label should be placed in a conspicuous location that is visible by the Qualified Electrical Worker before they open the electrical equipment (e.g. recommend label is installed at eye level on the electrical equipment if at all possible). The label is placed on the outside of the specific panel or enclosure door of the MCC/Electrical Distribution Equipment/SWGR that the label applies to. The key point is that the label must be easily noticeable by the Qualified Electrical Worker before they may be exposed to *energized electrical conductors or circuit parts*, or an *arc flash hazard*.

Large MCC or Switchgear line-ups often have different *incident energy levels* due to Main Breaker and feeder protective device design. Multiple labels may be required and placed on the electrical equipment. Care is taken to clearly indicate the equipment portion the labels apply to.

Typically the default labels should indicate that the applicable *incident energy data* is on the LINE SIDE or LOAD SIDE of the indicated protective device for the specific electrical distribution equipment. Based on the *Scenario Analysis* completed by the engineer the *incident energy value* indicated should be the worst case. Additional LOAD SIDE labels would be applied at a reasonable distance down the length of the equipment line-up.

If an *Emergency Generator* is part of the electrical distribution system, additional labels may have to be applied indicating LOAD SIDE and LINE SIDE incident energy when the generator(s) are running and utility transformers are disconnected. This should have been reviewed in the *short circuit current scenario analysis* completed in the *engineering incident energy analysis*.

When the *engineering based incident energy analysis* has been completed, *engineering based mitigation* may have also have been completed, which will require different labels to be installed indicating the incident energy when the mitigation is functional (e.g. using a *Maintenance Mode Switch*, see example label Figure H-3).

The *labelling schedule* and the specific label locations will depend on the MCC/SWGR layout/line-up.

5.1. Labelling Schedule

As an additional measure of tracking and confirming that labels have been installed correctly to this specification, the use of a *Labeling Schedule* (See *Table H-*) is recommended. When labels are applied the *Schedule* is used as a checklist.

Generic steps to follow using a labelling schedule:

1. Identify the MCC Building/Room in a particular facility and fill in the MCC Building/Room ID in the *Labelling Schedule template* below in *Table H-*.
2. Install appropriate warning signs on the MCC Building/Room doors on the outside of all doors as identified in *Figure H-10* to *Figure H-13*. It is recommended that all doors into enclosed MCC Buildings/Rooms also be uniquely labelled with the Building Name/Tag (e.g. BU-101 MCC Building, see the following examples). If existing building security protocols do not allow this level of detail labelling in public locations (e.g. hallways, voltage levels), the signage should be displayed in a prominent highly visible location immediately inside of the room.

Figure H-10 – Simplified Sign on the Door of MCC Buildings/Rooms – Authorized Personnel

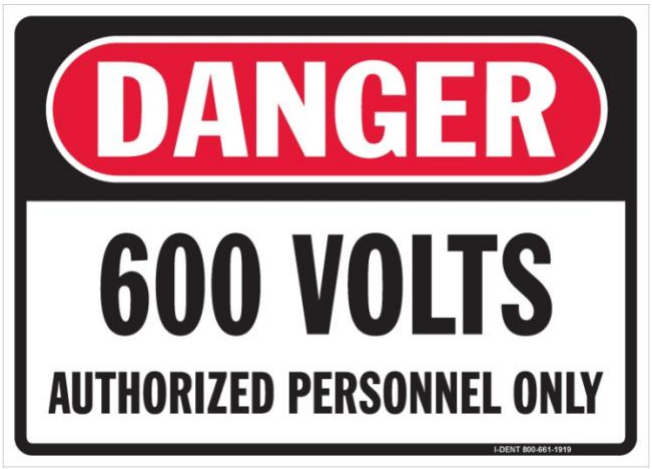

Figure H-11 – Simplified Sign on the Door of MCC Buildings/Rooms – Highest Voltage Present or Combine with Authorized Personnel Only

***Note**: Signs shall indicate highest voltage present in the room or building; 480 Volts, 600 Volts, 4160 Volts, etc.*

Figure H-12 – Example Magnetic Sign or Hanging Sign Indicating that Temporary Protective Grounds (TPGs) are Installed on Electrical Equipment

Figure H-13 – Example Label indicating that Arc Flash Mitigation Techniques are Present on this Electrical Equipment

3. Identify the particular MCC/SWGR line-up in the MCC Building/Room and fill in the MCC/SWGR ID in the *Labelling Schedule template* in *Table H-*.

4. An *Example of Label placement* on the identified SWGR line-up:

Scenario 1: Tie Open:

- Install labels at 5' above grade on both sides (when viewed from the line-up front) on the SWGR line-up. Line side and load side labels.
- Identify the Main 1 and/or Main 2 cubicles in the SWGR line-up.

***Note**: Main 1 and Main 2 breakers have different incident energy levels compared to the feeder breakers in the line-up.*

- Install labels where space is available and easily visible on (depending on the layout) the Front of the Main 1 and/or Main 2 cubicles separate from existing labels, markings or nameplate.
- Install labels at an easily visible position (depending on the layout) at the Back of the Main 1 and/or Main 2 cubicles.

Scenario 2: Tie Closed with 1 (one) Transformer in service:

- Incident Energy values are different from Scenario 1. A separate label set is printed and applied as per incident energy analysis results. Line side and load side labels.
- Follow the same guideline as Scenario 1 for label placement.

Scenario 3: Tie Closed with Transformers running in parallel:

- This is a worst-case short circuit current scenario.
- It is noted that in most cases parallel operation is not provided.
- Engineering incident energy analysis is performed.
- Engineering incident energy analysis results may result in very high incident energy values.
- Line side and load side labels.
- Energized electrical work may be strictly prohibited.

***Note:** Identify the Scenario 1 and Scenario 2 labels with "TIE OPEN" and "TIE CLOSED,"*
Utilize LOAD side and LINE side words respectively. These words must be located directly above the appropriate label in stencil or non-removable marking or on the detailed Arc Flash & Shock Warning equipment label itself.

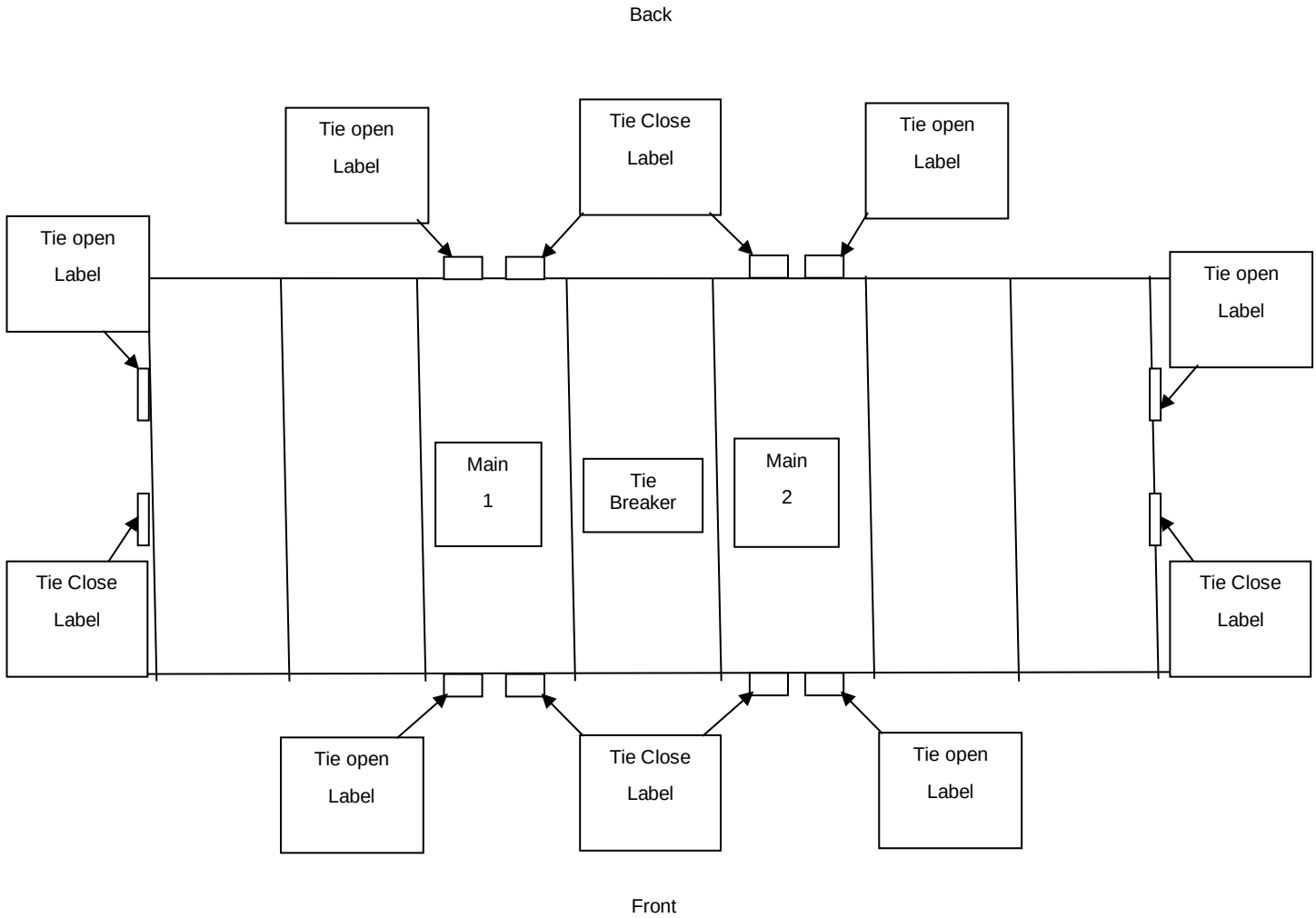

Figure H-14 – Label Placement on 4160 V SWGR Line-up

Note: *LINE and LOAD side labels to be included.*

5. Placement of labels on the identified MCC line-up:

   - Install labels 5' above grade on both sides (when viewed from the line-up front) on the MCC line-up.
   - Identify the Bus Connection or Main breaker cubicle in the MCC line-up.

   Note: *The Bus Connection or Main Breaker cubicle will have different incident energy levels (e.g. Line and Load side) compared to the motor starter or feeder breaker cubicle (e.g. Load side or Bus label) in the MCC line-up.*

   - Install labels at an easily visible location (depending on the layout) on the Main Breaker Section (e.g. incoming bus cable connection) front separate from existing labels, markings and nameplate.
   - Install labels at an easily visible location (depending on the layout) at the Back of the Main Breaker MCC Section (e.g. incoming bus cable connection) where incoming transformer cables or feeder cable are connected.

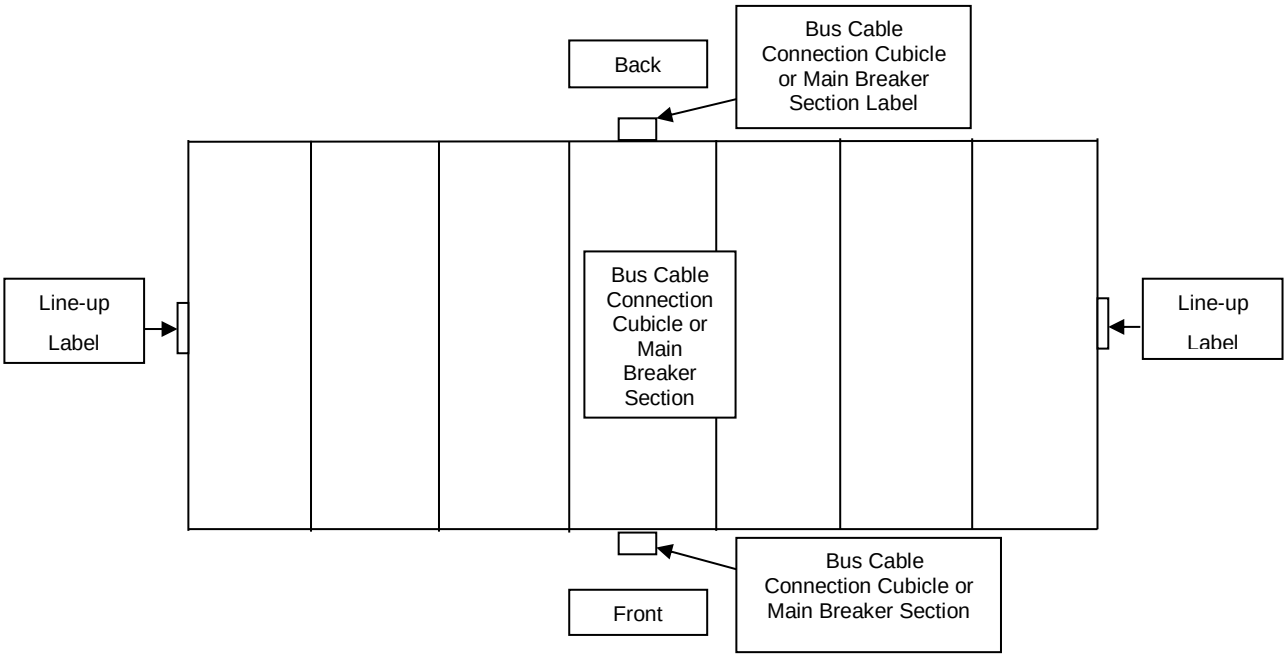

Figure H-15 – Label Placement on MCC Line-up

6. Where the MCC/SWGR line-up length requires it, line-up labels should be placed at an appropriate distance along the entire length of the MCC/SWGR. For an example, please see *Figure H-16 – MCC Line-up Label Placement*. The distance should be no greater than 10 feet or approximately six (6) Sections or four (4) SWGR Sections.
7. Following each step outlined above fill in appropriate information in the *Labelling Schedule Template* shown in *Table H-1*. Fill out the Remarks column as necessary.

Table H-7 – Labelling Schedule Template

BLDG ID	SWGR / MCC ID	Placement On SWGR/MCC Line-up		Specific Cubicle ID	Placement On MB or CT Cubicle		Remarks
		Left End*	Right End*		Front	Back	

* When viewed from the front of the line-up. MB = Main Breaker, CT = Cable Termination.

Note 1: *Separate the labels when installed from existing labels/markings/nameplate etc.*

Note 2: *Don't install near viewing windows, meters, relays panels and any other components.*

6.0 MAINTENANCE OF ARC FLASH & SHOCK WARNING LABELS AND BUILDING SIGNS

Labels and signs are subject to scheduled inspections. Damage, illegibility or missing labels or signs are corrected immediately.

Labels are kept legible and up-to-date. *Arc flash incident energy levels* can change when the electrical distribution system is modified, including changing settings on circuit breakers or protective relays.

Audit labels at a scheduled interval. Update labels when modifications, changes, expansions or modifications are made to the existing electrical distribution system (e.g. short circuit current changes) after an approved *Management of Change process*.

As per *CSA Z462*, the electrical distribution system and the *Engineering Incident Energy Analysis* (e.g. *Arc Flash Risk Assessment*) are recommended to be reviewed at a minimum on a 5 year schedule.

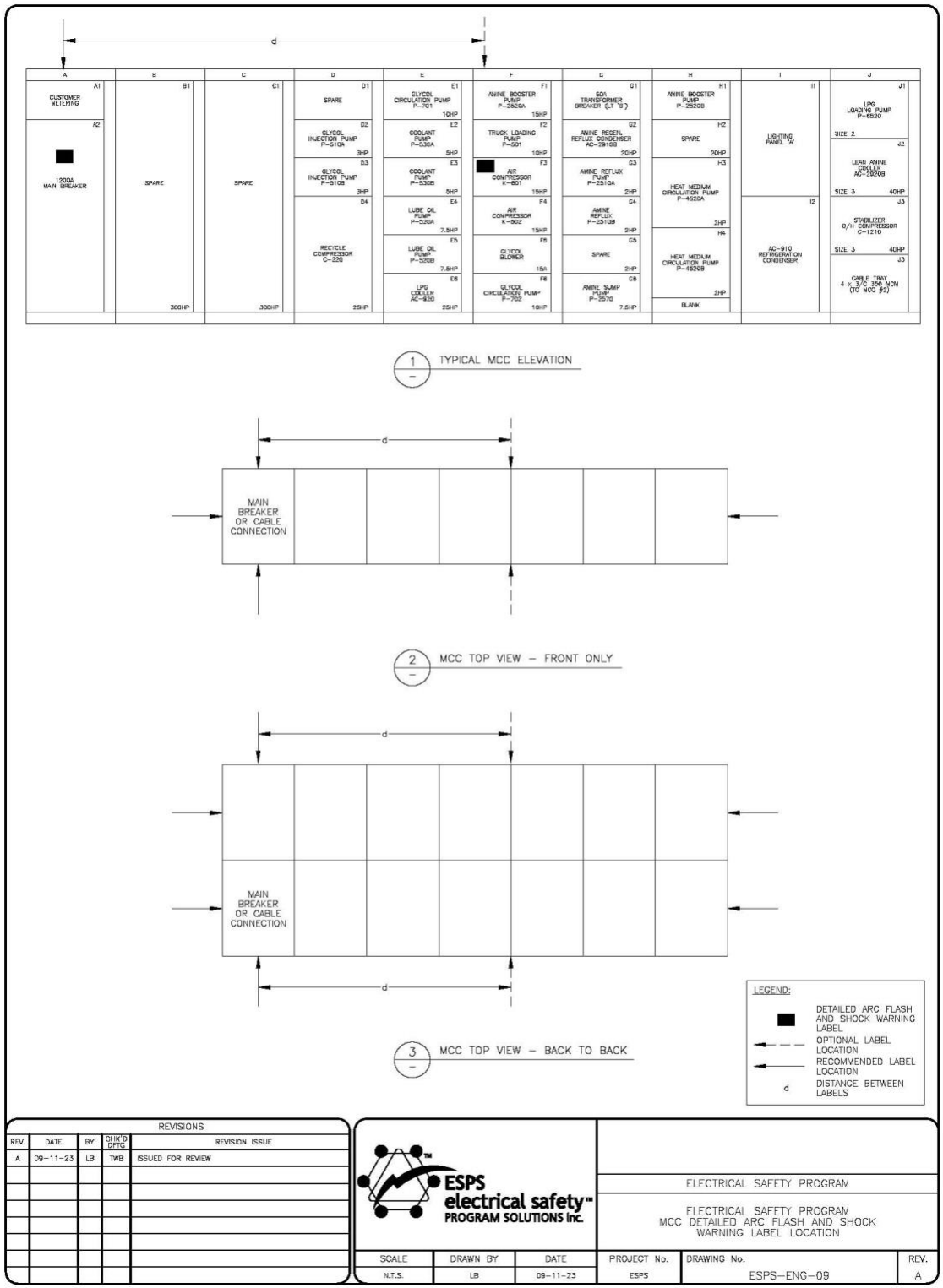

Figure H-16 – MCC Line-up Label Placement

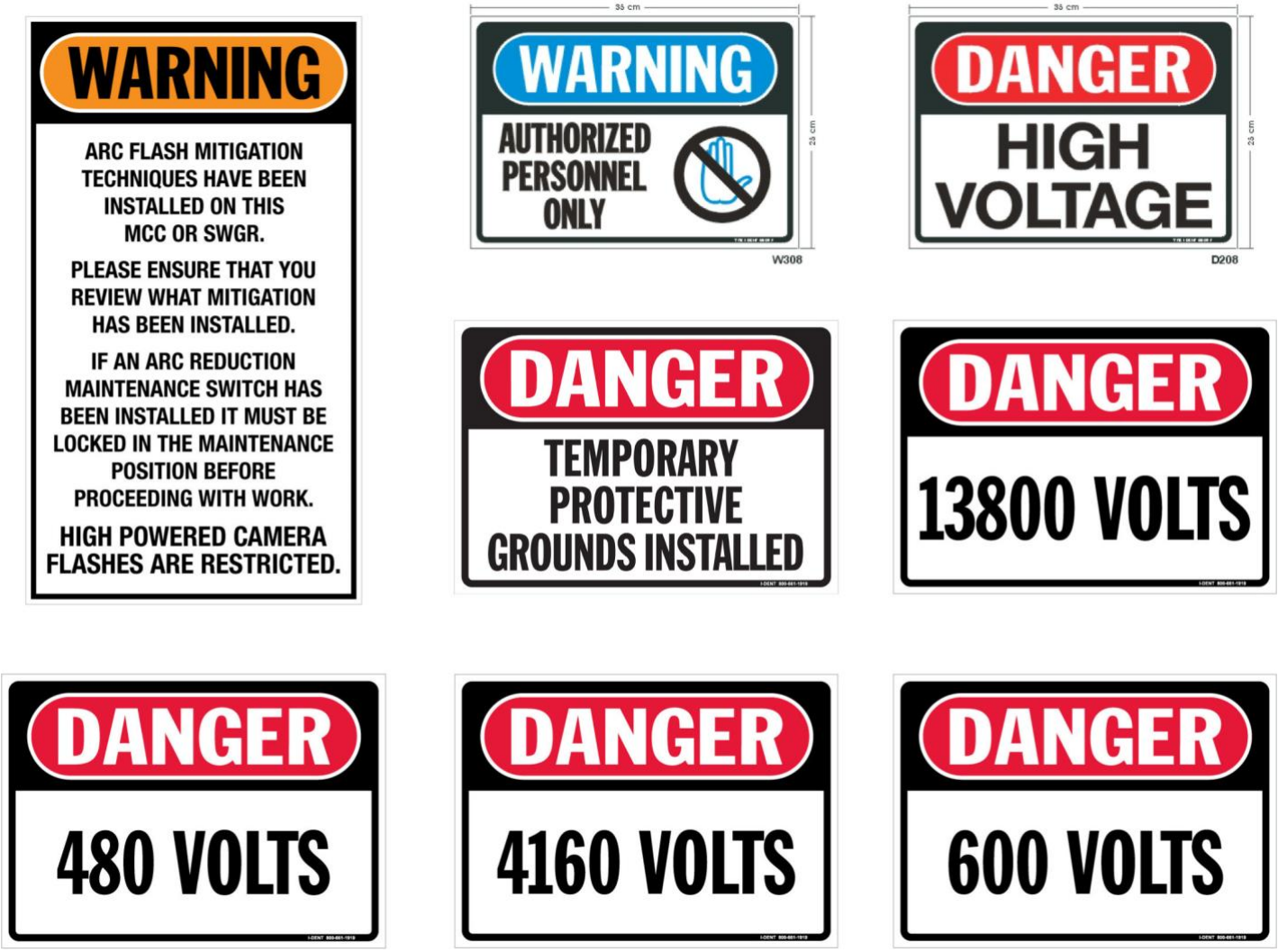

Figure H-17 – Examples of Various Electrical Signage

Figure H-18 – Example of Overhead Power Lines Danger Signage

APPENDIX I POWER LINE ENCROACHMENT AUTHORIZATION PERMIT (PLEAP) FORM

Form # ESP00013

This permit shall be used when work must be performed within legislated *Limits of Approach* or *Minimum Approach Distances* for overhead systems and power lines. The work cannot be completed outside of the 10 m distance if the work involves encroaching within the restricted zones.

Refer to WorkSafeBC Variance VR201700059 regarding minimum requirements and adjusted limits of approach for City of Vancouver workers working in the vicinity of overhead power lines.

Section 1 of the permit describes the date, company, authority, location and description of the work to be performed and identifies any restrictions that may be applicable to the task.

In *Section 2* of the permit, authorizations are required by the persons or organizations listed.

In *Section 3* of the permit it provides for acceptance from the recipient of the Permit by signing the Permit the recipient is indicating that the zones are understood and that *appropriate preventive and protective controls* will be followed to *reduce risk*.

This form can be printed directly or provided for use in a Non-Carbon Return (NCR) Book with sequential numbering (i.e. so there is never a duplicated Permit) and completed or filled in online.

ESP0013 – Power Line Encroachment Authorization Permit (PLEAP) Form

Power Line Encroachment Authorization Permit (PLEAP)

Section 1 – General Information:			Power Line Encroachment Authorization Permit (PLEAP) #: _____
Date Issued: yyyy-mm-dd _____/____/____	Valid From: yyyy-mm-dd _____/____/____	Valid Until: yyyy-mm-dd _____/____/____	Affected Safe Work Permit #s: _____, _____, _____
Utility or Operator-in-Charge / Authority: (As per Electrical Boundaries Diagram) _____		Company/Trade Designation: _____	Zone(s) Required: ☐ 2 ☐ 3
Physical Location:			
Description of Work:			
Restrictions:			

Section 2 – Authorizations:			
Position	Name (Print)	Signature	Date: (yyyy-mm-dd):
Job Site Supervisor (Zone "2" and "3")			_____/____/____
Encroachment Spotter (Zone "2" and "3")			_____/____/____
Qualified Electrical Worker High Voltage (Zone "3")			_____/____/____
Utility or Operator-in Charge / Authority (Zone "2" and "3")			_____/____/____

Section 3 – Acceptance:			
Position	Name (Print)	Signature	Date: (yyyy-mm-dd):
Acceptance by PLEAP Receiver: (Zone "2" and "3")			_____/____/____

ESP0013 – Power Line Encroachment Authorization Permit (PLEAP) Form (cont'd)

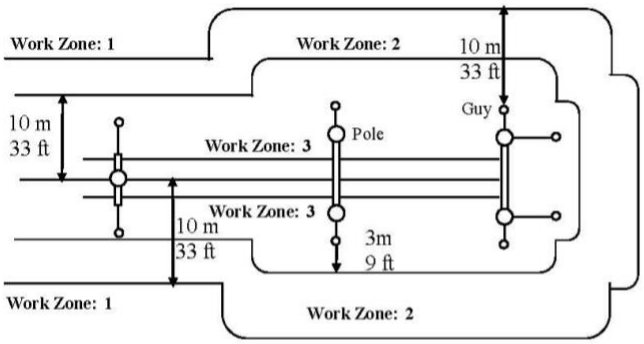

- **Work Zone 1**: Work done outside of 10 m (33 ft in the USA) from any pole or guys, and 10 m (33 ft) from the centre phase conductor does NOT require a "*Power Line Encroachment Authorization Permit (PLEAP)*."
- **Work Zone 2**: For work performed less than 10 m (33 ft), but no closer than 3 m (9 ft) away from poles and guys and not less than 6 m (20 ft) from the centre phase conductor, a "*Power Line Encroachment Authorization Permit (PLEAP)*" shall be required. A spotter with proper PPE shall be required.
- **Work Zone 3**: Work that is less than 3 m (9 ft) away from poles and guys. All activities shall be conducted under the direction of a *Qualified Electrical Worker High Voltage*. A spotter with proper PPE shall be required.
- All *City of Vancouver procedures / work practice(s)* shall be followed.

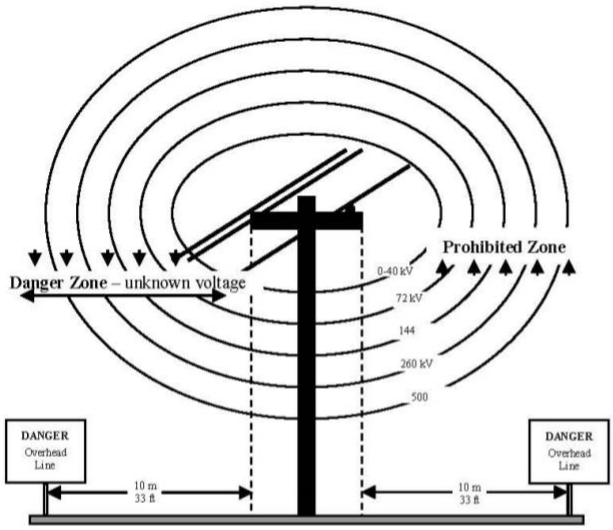

1) **DANGER ZONE:** Equipment shall NOT be operated within 10 m (23 ft in the USA) of any *overhead power line* without notifying the Utility or *City of Vancouver Operator-in-Charge/ Authority*.
2) **PROHIBITED ZONE:** (voltage is known or confirmed):
   a) Only *Qualified Electrical Workers High Voltage* shall be allowed to enter the *Prohibited Zone*.
   b) A designated spotter shall be required.
   c) All *City of Vancouver procedures / work practice(s)* shall be followed.

APPENDIX J. Energized Electrical Work Permit (EEWP) FORM

Form #: ESP0004

ESP 0004 – Energized Electrical Work Permit (EEWP) Form # 0000001

Energized Electrical Work Permit
EEWP Form

PART I – Description & Justification:

Qualified Person Name:	
Date:	
Requester:	
Work Task Description:	
Justification (greater hazard / infeasibility):	

PART II – Qualified Electrical Worker, Document *Arc Flash & Shock Risk Assessments*

Note:
The *ESP Energized Electrical Job Risk Assessment (EEJRA) Form* fulfills the requirements of the *Energized Electrical Work Permit (EEWP) Part II*. Use the *EEJRA Form* to complete *Job Safety Plan* and *Job Briefing*. The following minimum information is required:

Job Briefing:		
Job Procedure used:		
Safe Work Practices used:		
Limited Approach Boundary:		
Restricted Approach Boundary:		
Shock PPE, Tools & Equipment:		
Incident Energy:		
Working Distance:		
Arc Flash Boundary:		
Arc Flash PPE:		
Electrical Work Zone:		
Job & Work Tasks completed with Acceptable Risk:		
Worker Signature, Date:		___ / ___ / _____

PART III – Authorized Signatures and Date:

Authorizing individual	Signatures	Date
Requester: (e.g. Client, Operations, etc.)		___ / ___ / _____
Qualified Person(s):		___ / ___ / _____
Supervisor or **Designate:**		___ / ___ / _____
Manager or **Designate:**		___ / ___ / _____

COV Energized Electrical Work Permit Form 2018 Rev 1.0 Page **1** of 1

Note: *For client deployment, this form needs to be created in a Non-Carbon-copy Return (NCR) booklet format adding additional space to allow for handwritten entries where applicable. The EEWP displayed is the example found in CSA Z462 Annex J and can be customized in content and appearance. In Part III the required signatures must be reviewed and confirmed, more or less signatures may be required.*

APPENDIX K. SIGN-OFF AND CHECK-IN/CHECK-OUT SHEETS FOR PERSONALLY ASSIGNED AND SHARED ELECTRICAL SPECIFIC PPE, TOOLS & EQUIPMENT

The following *inventory log* is to be used for shared *Electrical Specific PPE, Tools, and Equipment*. A *separate list* should be retained at every shared PPE storage location and locker. Workers sign the articles of *Electrical Specific PPE, Tools & Equipment* out and in and ensure the articles are returned to the same location. Dates are recorded. If the PPE is returned in a state of disrepair requiring cleaning or maintenance, it shall be recorded on the log form and reported to the Supervisor and through the *work order system*.

Form #: ESP0005

Table K-8 – Electrical Specific PPE, Tools & Equipment Check-in/Check-out Log

QEW's Name	Work Order #	Date Signed Out	Date Returned	Returned Condition (Cleaning or Maintenance Required)	PPE Tag	PPE Description	Location (Locker Number)

APPENDIX L. ELECTRICAL SPECIFIC PPE, TOOLS & EQUIPMENT LEVEL TABLES

The "*Levels*" identified below are specific to this *Electrical Safety Program* and represent *arc-rated clothing groupings* that help simplify the application of *Electrical Specific PPE, Tools and Equipment* as a control to reduce severity (injury or damage to health) when completing a *Risk Assessment Procedure* for a *justified energized electrical work task*. The *Levels* as listed below are correlated to *Arc Flash PPE Categories* if the *Arc Flash PPE Category Table Method* has been used to determine additional protective measures for *Arc Flash Risk Assessment*. When *engineering incident energy analysis studies* have been completed and *detailed Arc Flash & Shock Warning Equipment Labels* are installed or *Results Tables* are available *arc-rated clothing* is selected based on the listed *incident energy* with an *ATPV or* E_{BT} value that is equal to or greater than the *incident energy* listed on the label.

The two "*Level*" system is consistent with *CSA Z462 Table 3* in order to simplify *procurement, selection and inventory management* of *arc-rated clothing*.

The tables below also list other typical *shock PPE, tools & equipment* and other items that may be required for *LOTO*, etc.

Table L-9 **– LEVEL 0**
Qualified Electrical Worker, Everyday Wear Clothing – Wear Company Standard PPE

Item	Description	Comments
1	100% Cotton Natural Fibre Underwear	Limit elastic bands. For female worker 100% cotton sports bra recommended.
2	100% Cotton Natural Fibre Shirt & Pants	Long sleeve shirt and work pants or denim jeans.
3	*CSA or UL Approved Safety Glasses*	Anti-fog, anti-scratch, >99% UV Rated Polycarbonate lens.
4	*CSA or UL Approved Grade 1, Ohm Rated Safety Boots*.	Leather only, and boot only footwear. Full leather upper section to cover ankles.

Notes:

1. *Depending on other workplace hazards the "Company" Standard PPE may be Flame Resistant (FR) clothing as a mandatory requirement. Level 0 as defined in the Electrical Safety Program is not an arc-rated clothing system, but for a QEW must be 100% natural fibre clothing worn to work.*

Table L-10 – LEVEL 1 [Arc Flash PPE Category 1 or 2 when you use the Arc Flash PPE Category Table Method]

Energized Electrical Work, Electrical Specific PPE for Arc Flash & Shock

Item	Description	Comments
1	*Arc-rated Clothing* (e.g. shirt & pants, coveralls)	Between 8 and 12 cal/cm^2 *arc rating* (e.g. *ATPV or* E_{BT})
2	*Arc-rated Faceshield* – Recommend Oberon True Color Grey. No wire color discoloration and best Visual Light Transmission. **Or** *Arc-rated Arc Flash Hood* With Cooling Fan and LED Lamp	Minimum 12 cal/cm^2 *arc rating* (e.g. *ATPV or* E_{BT}). Oberon 17 cal/cm^2 *arc rating* (e.g. *ATPV*). Oberon currently only product available. Procure with a storage bag. Minimum 12 cal/cm^2 *arc rating* (e.g. *ATPV*). Oberon only product available with optional LED lamp and hood ventilation system. Recommend procuring with the LED lamp and hood ventilation system.
3	*Arc-rated Balaclava*	Between 8 and 12 cal/cm^2 *arc rating* (e.g. *ATPV or* E_{BT}). Provides full face protection front and back except for the eyes and nose. Required to be worn with an arc-rated faceshield.
4	*Rubber Insulating Gloves c/w Leather Protectors* with Storage Bag	Class 0, 1000VAC or 1500VDC rated minimum for all low voltage work. Otherwise Class 1 for 7.5kV and Class 2 for 17kV, Class 3, 26.5kV, and Class 4, 36kV. Provides arc flash protection for the hands. Individually issue Class 0, two pairs recommended. Class 1, 2, 3 or 4 to be shared for HV work. Ensure *Leather Protector gloves* are the correct Class # and sized to match the *Rubber Insulating Glove*.
5	*Work Gloves*	When shock protection is not required as per a *Shock Risk Assessment*, non-rubber insulating work gloves can be worn for arc flash protection. Select appropriately gloves that are non-arc-rated gloves suitable for the work task, but provide arc flash protection for the hands. Recommend good fit for dexterity. Ensure any non-leather work glove is tested and certified to *ASTM F2675*.
6	*CSA or UL Approved Safety Glasses*	Anti-fog, anti-scratch, >99% UV Rated Polycarbonate lens. To be worn as primary protection underneath *arc-rated faceshield or arc flash suit hood*. Safety glasses selection required based on a *risk assessment*.

Item	Description	Comments
7	*CSA or UL Approved Grade 1, Ohm Rated Safety Boots*.	Leather only, and boot only footwear. Full leather upper section to cover ankles.
8	Hearing Protection	Ear Canal insert type or Non-Conductive Ear Muffs (confirm that they can be worn with *arc-rated faceshield or arc flash suit hood*). When using an *arc flash suit hood* with ventilation system recommend using *3M Peltor Tactical Pro* behind the neck type ear muffs that can be used to accommodate communication and provide additional noise attenuation. Minimum requirement is Ear Canal insert type hearing protection.
9	Class E Hard Hat Type 1	To be included with the *Arc-rated Faceshield*. Keep together do not interchange. Use a 6 point ratchet type suspension for the best fit. Rated to 20kV non-conductive. Type 1 or 2 selection required based on a *risk assessment*. Recommend Type 1 as Type 2 foam insert may melt when used with *arc-rated faceshield*.
10	Stanchions & Red Danger Tape	Available for use, may be stored in central location. Red tape can be connected to equipment, doors etc. with duct tape. Retractable type optional (e.g. as used in airports, stanchioned, wall mounted or magnetic are available).
11	Locks & Tags and Locking Mechanisms For Breakers (e.g. Panduit, Oberon, Masterlock, etc. as required)	Personal lock(s), special lock out devices for electrical equipment, and tags.
12	Kit Bag or Locker	Storage for *PPE, Tools & Equipment*. When using a locker PPE is stored on hangers or folded on shelves. Label the locker on the outside. If kit bag used label and/or tag the kit bag with unique ID. Recommend kit bag with plastic base for better protection of clothing (e.g. *Oberon Blue Kit Bag with plastic base #KITBAG*).

Notes:

1. *Reference CSA Z462 Table 6C or NFPA 70E Table 130.7(C)(15)(c) when the Arc Flash PPE Category Table Method of Arc Flash Risk Assessment is used.*
2. *Reference CSA Z462 Table 3, or NFPA 70E, Table 130.5(G).*

Table L-11 – LEVEL 2 [Arc Flash PPE Category 3 and 4 when you use the Arc Flash PPE Category Table Method]

Energized Electrical Work, Electrical Specific PPE for Arc Flash & Shock

Kit Bag or Stored In Locker

Item	Description	Comments
1	*Arc Flash Suit* c/w Arc Flash Suit Hood, Arc Flash Suit Coat and Arc Flash Suit Bib-Overalls. Recommend *Oberon True Color Grey Hood lens*. No wire color discoloration and best Visual Light Transmission.	Minimum 40 cal/cm^2 *arc rating* (e.g. *ATPV or* E_{BT}). Order with Kit Bag. *Arc Flash Suit Hood* must have hood ventilation system and LED lamp. Oberon available with LED hood mounted lamp and hood ventilation system that vents air to the front of the hood for improved defogging and fresh air to the QEW breathing zone. *Oberon Company* has available a 106 *ATPV* and 140 *ATPV* arc flash suit, both in lightweight layered cloth system.
2	*Rubber Insulating Gloves c/w Leather Protectors* with storage bag	Class 0, 1000VAC or 1500VDC rated minimum for all low voltage work. Otherwise Class 1 for 7.5kV and Class 2 for 17kV, Class 3, 26.5kV, and Class 4, 36kV. Provides arc flash protection for the hands. Individually issue Class 0, two pairs recommended. Class 1, 2, 3 or 4 to be shared for HV work. Ensure *Leather Protector gloves* are the correct Class # and sized to match the *Rubber Insulating Glove*.
3	Work Gloves	When shock protection is not required as per a *Shock Risk Assessment*, non-rubber insulating work gloves can be worn for arc flash protection. Select appropriately gloves that are non-arc-rated gloves suitable for the work task, but provide arc flash protection for the hands. Recommend good fit for dexterity. Ensure any non-leather work glove is tested and certified to *ASTM F2675*. For *incident energy levels* greater than 12 cal/cm^2 wear *Rubber Insulating Gloves with Leather Protectors* for arc flash protection for the hands.
4	*CSA or UL Approved Safety Glasses*	Anti-fog, anti-scratch, >99% UV Rated Polycarbonate lens. To be worn as primary protection underneath arc-rated faceshield or arc flash suit hood.

Item	Description	Comments
		Safety glasses or goggles selection required based on a risk assessment.
5	CSA or UL Approved, Grade 1, Ohm Rated Safety Boots.	Leather only, and boot only footwear. Full leather upper section to cover ankles.
6	Hearing Protection	Ear Canal insert type or Non-Conductive Ear Muffs (confirm that they can be worn with arc-rated faceshield or arc flash suit hood). When using an *arc flash suit hood* with ventilation system recommend using *3M Peltor Tactical Pro* behind the neck type ear muffs that can be used to accommodate communication and provide additional noise attenuation. Minimum requirement is Ear Canal insert type hearing protection.
7	Class E Hard Hat Type 1	To be included with the *Arc Flash Suit Hood*. Keep together do not interchange. Use a 6 point ratchet type suspension for the best fit. Rated to 20kV non-conductive. Type 1 or 2 selection required based on a risk assessment. Recommend Type 1 as Type 2 foam insert may melt when used with arc-rated faceshield.
8	Stanchions & Red Danger Tape	Available for use, may be stored in central location. Red tape can be connected to equipment, doors etc. with duct tape. Retractable type optional (e.g. as used in airports, stanchioned or wall mounted).
9	Locks & Tags and Locking Mechanisms For Breakers (e.g. Panduit, Oberon, Masterlock, etc. as required)	Personal lock(s), special lock out devices for electrical equipment, and tags.
10	Kit Bag or Locker	Storage for *PPE, Tools & Equipment*. If using a locker PPE is stored on hangers or folded on shelves. Label the locker on the outside. If kit bag used label and/or tag the kit bag with unique ID. Recommend kit bag with plastic base for better protection of clothing (e.g. *Oberon Blue Kit Bag with plastic base #KITBAG*).

Table L-12 – Other Electrical Specific PPE, Tools & Equipment

Item	Description	Requirements
1	*CSA or UL Approved Test Instruments* (*Digital Multi-Meter*), List Manufacturer/Model, Provide Category & Voltage	For low voltage applications *Digital Multi-meter* or *clamp on style only or voltage detectors*. Minimum Category III, 600V (e.g. Peak Impulse Transient, 6000V).
2	Properly Rated *High Voltage Voltage Proximity Detector* with storage bag/box	*Salisbury Model 4544* (e.g. self test visual and audible), with Self Test Feature both Visual and Audible. Order with plastic hard storage case. Also recommend ordering the *Salisbury 4445 Voltage Source* for testing the 4544. Hot stick adapter built into the voltage detector.
3	*Fluke PRV 240 Proving Unit Model: PRV240*	Test-Before-Touch, provides both AC and DC 240 V source for proving test instruments.
4	*Fluke Probe Extenders Model: L215*	SureGrip Kit with Probe Light and Probe Extenders for Fluke test instruments.
5	*Rubber Insulating Glove Inflator*	Recommend *Cementex*. *Salisbury* also available.
6	*Temporary Protective Grounds* – List Wire Gauge	Site and electrical equipment specific. Ensure *maximum short circuit current* at an *assumed clearing time* is used to size clamp and conductor. Uniquely tagged with ID and *short circuit current* at *assumed clearing time*. Check Clamp Type to suit equipment or retrofit "ground ball studs" and this type of Clamp.
7	*Hot Stick (s)* – List Type, Length, Manufacturer	Telescopic (e.g. recommend 4' or 6') for use with *HV Proximity Detector* and/or *Shot Gun style* (e.g. recommend 4' length for use in enclosed switchgear) for use with *Temporary Protective Grounds*.
8	*Rescue Hot Stick*	Optional, 6ft length with hook on the end.
9	*Discharge Hot Stick*	Optional. Adapts to *shotgun style hot stick* with resistor, grounding conductor and clamp. Can be used for discharging capacitors and removing residual voltage on long cable lengths.
10	*Warning Sign – Danger Temporary Protective Grounds Installed* (e.g. magnetic warning sign used on outside of SWGR).	Stored in storage locker or in MCC room.
11	*Ground Truck Device (GTD)* or *Ground Truck & Test Device*	Equipment manufacturer specific customized from applicable manufacturer and site specific.

Item	Description	Requirements
12	*Insulated Hand Tools* – List Manufacturer & Tools. Stored in separate case or wrap?	Shared set of standard hand tools. UPS battery work specialized set marked "*UPS Work Only*." Stored in suitable soft wrap or hard case. Do not store with normal hand tools.
13	Portable in-line GFCIs.	To be used when uncertain if receptacle is GFCI protected. Must "Test" and "Reset" before use.
14	Other	

Table L-13 – Optional or Specific to Work Task Requirement

Additional Electrical Specific PPE, Tools & Equipment

Item	Description	Requirement
1	Winter outer wear.	*Arc-rated* as required. Winter jackets will have a high *ATPV or* E_{BT} value, typically 50 to 60+ cal/cm^2.
2	Rainwear.	*Arc-rated* as required. Depending on the manufacturer *arc rating* will vary.
3	Dual Rated both Chemical and Arc Flash Suit NASCO PetroLite 9000 Series	Nomex 3A, FR Neopene 13.5 Oz/yd^2. Arc Rating 9.1 ATPV cal/cm^2.
4	Manual *Rack In / Out Tool*	Equipment manufacturer specific. Should be stored in locker or other secure location within the MCC Room.
5	*Rubber Insulating Blanket*	Optional, 1000V, Class 0.
6	Other *HV Specialized Tools or Equipment*	

Notes:

1. *All Electrical Specific PPE, Tools & Equipment must be approved to an applicable Standard as outlined in CSA Z462.*
2. *When ordered it is recommended that laminated inventory lists be created and kept with the kit bags or in storage lockers.*
3. *Electrical Specific PPE, Tools & Equipment listed above can be deployed using a shared or individually assigned system.*
4. *Shared Electrical Specific PPE, Tools & Equipment should be stored in a central, controlled location or in assigned MCC Buildings/Rooms. Storage in suitable bags, containers (e.g. PVC tubes for hot sticks) or a locker is recommended.*

5. *Lockers located within MCC Buildings/Rooms for storage of shared Electrical Specific PPE, Tools & Equipment should be labeled on the outside with a unique tag (e.g. Electrical Specific PPE, MCC Building BU-101).*
6. *Purchase the manufacturers storage bags for Electrical Specific PPE, Tools & Equipment (e.g. rubber insulating gloves, arc-rated faceshields, hot sticks, digital multi-meter, arc flash kit bags for arc flash suits, etc). Oberon Company has the best available large kit bag with plastic base.*
7. *Care, use, maintenance and pre-use inspections requirements should be provided in documented form to electrical workers.*
8. *Emergency Response Plans should be reviewed to assess if electrical hazards are identified and first responders instructions provided. An insulating rescue hot stick is specified for this reason if deemed necessary.*
9. *With respect to shared Electrical Specific PPE, Tools & Equipment a simple check in and check out system is recommended.*
10. *Ensure that third party dielectric testing is completed at the required frequencies for rubber insulating gloves, hot sticks, temporary protective grounds and blankets.*
11. *Electrical Specific PPE, Tools & Equipment can be tagged with a unique identifying tag to allow it to be tracked for inventory management, PMs or reference in electrical safe work procedures.*

APPENDIX M. ELECTRICAL SPECIFIC PPE, TOOLS & EQUIPMENT SPECIFICATION AND STANDARDS TABLES

Table M-14 – Electrical Specific PPE, Tools & Equipment Specifications

ES PPE, Tools or Equipment	Minimum Specification	Reference Standards
Head Protection	• Non-conductive, Class E head protection complying with *ANSI Z89.1* (e.g. rated for 20kV). • Type I or Type II as per company requirement. • Recommend polycarbonate hard caps for superior thermal protection. • Suspension system – four or six points of support. • Recommend using ratchet suspension inside hard cap to support shield weight, keep hood from spinning and maintain window position. • Color, size and design will vary from location to location. • Winter hard hat liner to be made from FR/AR materials for arc flash protection.	CSA-Z94.1, Industrial Protective Headwear ANSI Z89.1, Requirements for Protective Headwear for Industrial workers.
Safety Glasses and Arc-rated Eye and Face Protection	• Fit properly and offer the least possible resistance to movement and cause minimal discomfort while in use. • Should be made of polycarbonate material. No metal parts. • Consider “Anti-Fog”, “Anti-Glare”, “Scratch-Resistant” coatings and “UV-Proof” features when selecting the face-shields. • Arc-rated faceshields or arc flash suit hoods shall always be used with an arc rating that is suitable for the arc flash exposure. • Arc rating of the faceshields should comply with *ASTM F 2178*. • Use fleece interior cotton canvas storage bag or nylon storage bag for arc-rated faceshield with hard hat attached, w/ drawstring closure or suitable storage bag for arc flash hood.	CSA-Z94.3, Eye and Face Protectors ASTM F 2178, Standard Test Method for Determining the Arc rating of Face Protective Products ANSI Z87.1, Practice for Occupational and Educational Eye and Face Protection.

Table M-14 – Electrical Specific PPE, Tools & Equipment Specifications

ES PPE, Tools or Equipment	Minimum Specification	Reference Standards
	• Safety glasses shall be antifogging, anti-scratch and antistatic with 99.9% UV protection, and meets *ANSI Z87.1*. • Some *arc-rated faceshields* and *arc flash suit hoods* have low impact ratings, requiring *approved safety glasses* to be worn under the faceshield or *arc flash suit hood* for eye impact protection. • High impact rated *arc-rated faceshields and arc flash suit hoods* are superior and should be used whenever possible. *ANSI Z87.1+* (plus symbol indicates high impact models) shall be used for both shields and hood windows for maximum protection from shrapnel, projectiles and flying debris. • Select shields and hood windows with the highest amount of visual light transmission. Obtain the *ANSI Z87.1* manufacture spectral scan when comparing different models. • The use of *arc-rated goggles* for arc flash protection is not recommended.	

Rubber Insulating Gloves with Leather Protectors	• *Rubber insulating gloves* must combine high dielectric, flexibility and physical strength.
	• A glove system consists of two main elements and an optional third element:
	  • *Rubber Insulating Gloves*.
	  • *Leather Protector gloves*.
	  • *Liner gloves* (optional)
	• Specify Type II rubber that is Ozone resistant.
	• Approved glove dust can be used (e.g. optional).
	• *ASTM F 496* specifies voltage Class of gloves (e.g. voltage rating of the glove must be at least equal to or higher than the maximum circuit voltage to be worked on).
	• The *Rubber Insulating Gloves Class* must be increased by one Class when gloves are used without the *Leather Protectors*.
		ASTM D 120, Standard Specification for Rubber Insulating Gloves.
		
		ASTM F 496, Standard Specification for In-Service care of Insulating Gloves and Sleeves.
		
		ASTM F 696, Standard Specification for Leather Protectors for Rubber Insulating Gloves and Mittens.

Table M-14 – Electrical Specific PPE, Tools & Equipment Specifications

ES PPE, Tools or Equipment	Minimum Specification	Reference Standards
	• Class 00 up to 250VAC only • Class 0 • Class 1 to 4 must use one Class higher than usage voltage To be used in limited use situations where good finger dexterity is required and a low risk of physical damage to the glove is possible. Gloves must be inspected and retested before returning to normal use with *Leather Protectors*. • Gloves should be sized for the individual that is to wear them (e.g. palm measurement around the widest point is the size that should be ordered). • Color to be specified as required. Black best for arc flash performance. • Cuff design (e.g. default design is the straight cuff; other designs have advantages in specific circumstances). • Gloves shall always be purchased with *leather protector*s and manufacturer's approved storage bag (e.g. canvas bag or equivalent). Place gloves separated from leather protectors with the opening of the gloves into the storage bag. • *Leather protectors* shall meet the requirements of *ASTM F 696* and must match the size and Class of the rubber insulating gloves for proper fit. • Recommend that each pair of gloves be assigned a unique tag that is marked on the storage bag. This tag can be used for tracking in *preventative maintenance scheduling* and referenced in *procedures*. • At least two pairs of *rubber insulating gloves* should be ordered for each worker where individually issued, allowing for one set to be sent out for dielectric testing while one set if available for use. • *Rubber Insulating Gloves* can be deployed as shared PPE, but effective management is required	ASTM F 1296, Standard Guide for Visual Inspection of Electrical Protective Rubber Products.

Table M-14 – Electrical Specific PPE, Tools & Equipment Specifications

ES PPE, Tools or Equipment	Minimum Specification	Reference Standards
	e.g. testing, and cleaning. Where shared ensure adequate sizes and quantities available.	

Rubber Insulating Sleeves	• Sleeves must comply with all the requirements of *ASTM D 1051*.
	• Specify Type II rubber that is Ozone resistant.
	• Voltage Class of sleeves (e.g. assigned to the same voltage Class as the rubber insulating gloves).
	• Construction – molded or dipped.
	• Style (e.g. Type I is available as straight taper or curved elbow, Type II is available in curved construction only.).
	• Size and color to be specified as per specific requirements.
	• Both Type I and Type II sleeves are constructed with holes to accept buttons with which to fasten the straps to the sleeves.
	• Sleeves shall always be purchased with a storage bag or box.
	
	• Other accessories to be specified are:
	  • Harness (one required per pair of sleeves)
	  • Buttons (four required for each pair of sleeves)
	  • Straps with buttons (two required for each pair of sleeves)
		ASTM D 1051, Standard Specification for Rubber Insulating Sleeves.

Rubber Insulating Aprons	• Aprons must comply with all the requirements of *ASTM F 2677*. • Type I is non-resistant to ozone, specify Type II and Type III which are resistant to ozone degradation. • Voltage Class of Aprons (e.g. assigned to the same voltage Class as the *Rubber Insulating Gloves*).	ASTM F 2677 Standard Specification for Electrically Insulating Aprons.

Table M-14 – Electrical Specific PPE, Tools & Equipment Specifications

ES PPE, Tools or Equipment	Minimum Specification	Reference Standards
Rubber Insulating Mats and Matting	• Mats and matting must comply with all the requirements of *ASTM D 178*. • Type IIA-Ozone resistant or Type IIB-Flame resistant. • Voltage Class of mats and matting (e.g. assigned to the same voltage Class as the rubber insulating gloves). • Mats and matting are available in widths of 24, 30, 36 and 48 inches. • Mats are provided in pre-cut dimensions and matting is provided as rolls in lengths as requested. • Type and Class must be marked on the mat. • Color to be specified as per specific requirements.	ASTM D 178, Standard Specification for Rubber Insulating Matting.
Rubber Insulating Blankets	• Blankets must comply with all the requirements of *ASTM D 1048*. • Type II-Ozone and Ultraviolet resistant or Type IIB-Flame resistant. • Voltage Class of blankets (e.g. assigned to the same voltage Class as the rubber insulating gloves). • Construction style (e.g. with or without eyelets). Specific sizes are available with Voltage Class 2 and Class 4 ratings. • Magnets are available for attachment to equipment. • Color to be specified as per specific requirements.	ASTM D 1048, Standard Specification for Rubber Insulating Blankets. ASTM F 2676 Standard Test Method for Determining the Protective Performance of an Arc Protective Blanket for Electric Arc Hazards. CAN/ULC – D61112 Blankets of Insulating Material for Electrical Purposes
Dielectric Barriers	• Passes acceptance testing of Poly Vinyl Chloride insulating sheeting for use as a covering for protection of workers as defined in *ASTM F 1742*.	ASTM F1742 - 03e1 Standard Specification for PVC Insulating Sheeting.

Table M-14 – Electrical Specific PPE, Tools & Equipment Specifications

ES PPE, Tools or Equipment	Minimum Specification	Reference Standards
Ohm or EH Rated Footwear		CAN/CSA –Z195, Protective Footwear. CSA Z195.1 Guideline on Selection, Care and Use of Protective Footwear. ASTM F2412 Standard Test Methods for Foot Protection ASTM F2413 Standard Specification for Performance Requirements for Protective (Safety) Toe Cap Footwear

Table M-14 – Electrical Specific PPE, Tools & Equipment Specifications

ES PPE, Tools or Equipment	Minimum Specification	Reference Standards
Dielectric Footwear	• Dielectric footwear must comply with all the requirements of *ASTM F 1117*. • Voltage rating should be marked (e.g. manufacturers test them to a predetermined voltage level of AC, 15kV or 20kV or DC, 45kV or 60kV). • Premium quality ozone-resistant rubber. • Description to be specified – boots (e.g. including height) or overshoes. • Sizes to be specified as per specific requirements. • The symbols or markings on the footwear will help you determine which footwear is appropriate for the job. • If overshoe style, designed to fit over existing footwear. • Labels should be on the tongue of the right shoe at ankle height. • Labels may also appear at ankle height (e.g. 6 inches minimum) on the shoe itself for electrical protection footwear.	CAN/CSA –Z195, Protective Footwear. CSA Z195.1 Guideline on Selection, Care and Use of Protective Footwear. ASTM F 1116 Standard Test Method for Determining Dielectric Strength of Dielectric Footwear ASTM F 1117, Standard Specification for Dielectric Overshoe Footwear. ASTM F 2412, Standard Test Methods for Foot Protection. ASTM F 2413, Standard Specification for Performance Requirements for Foot Protection.
Arc-rated Clothing	• Shall meet the requirements of *ASTM F 1506*. • Materials shall be arc-rated using inherently flame resistant fabric or treated cotton and other fabrics treated with chemical agent. • The arc rating of FR clothing should be determined by testing in accordance with *ASTM F 1959*. • Arc rating as tested to *ASTM F 1959* will be recorded on a garment as *Arc Thermal Performance Value (ATPV) or Breakopen threshold energy (E_{BT})*. • Store in manufacturer's approved storage bag or storage locker in a clean dry environment. Never store with sharp objects, or in dusty areas. • *Arc-rated clothing* must be labelled as follows: • Manufacturer	ASTM F 1506, Standard Performance Specification for Textile Material for Wearing Apparel for Use by Electrical Workers Exposed to Momentary Electric Arc and Related Thermal Hazards. ASTM F 1959, Standard Test Method for Determining the Arc Rating of Materials for Clothing.

Table M-14 – Electrical Specific PPE, Tools & Equipment Specifications

ES PPE, Tools or Equipment	Minimum Specification	Reference Standards
	• *Arc Thermal Performance Value (ATPV) or E_{BT}* rating in calories per square centimetre • Care instructions • Fabric fiber content (e.g. oz weight/sq yard) (optional) • Garment size • Manufacturer tracking code • Meets requirements of *ASTM Performance Specification F 1506* • When *incident energy calculations* are completed and *detailed Arc Flash and Shock Warning equipment labels* available or access to the *engineering report* then *arc-rated protective clothing* must be specified with an arc rating equal to or greater than the *incident energy*. • When using the *Table Method of Arc Flash Risk Assessment, arc flash protective clothing* is specified based on *Arc Flash PPE category*, which are correlated to an equivalent minimum *arc rating*. • Configurations – shirts and pants or coveralls for *Arc Flash PPE Category 2* or lower and *arc flash suit* (e.g. hood, jacket and bib style pant) for *Arc Flash PPE Category 4* or *ASTM F 1959* test results for layering with *Arc Flash PPE Category 4 arc flash suit hood*. • Layering – single layer or it might consist of two or more layers. Consult the manufacturer to determine the *Total System Arc Rating* of the *multi-layer protective system* (e.g. you need to confirm the equivalent *ATPV or E_{BT}* by reviewing manufacturer`s *ASTM F 1959* test results). You CANNOT just add the ATPV values of the layers of clothing. • Tight fitting clothing should be avoided. Loose fitting clothing provides additional thermal insulation by ensuring the air gap between the skin	

Table M-14 – Electrical Specific PPE, Tools & Equipment Specifications

ES PPE, Tools or Equipment	Minimum Specification	Reference Standards
	and clothing, and layers of clothing is provided. • An *arc flash suit* should fit properly such that it does not interfere with the intended task. • *Arc flash suit hood* should be specified with a hood ventilation system. External components to be completely covered by FR materials to avoid non-FR component ignition in the event of an arc flash accident. • All company requirements for additions to the garment (e.g. name tags, company logos) should be applied with *inherently FR thread*, check with garment manufacturer. Keep non arc-rated logos as small as possible. Embroidered text must be with FR thread. • Any damage will be repaired using the same *arc-rated materials* as the original garment and *inherently FR thread*. • *Undergarments* should be made of 100% cotton, arc-rated, or other non-meltable fabric (***Note**: This applies to workers of both genders*). • Clothing made from flammable synthetic materials that melt at temperatures below 315°C (600°F), such as acetate, nylon, polyester, polypropylene, and spandex, either alone or in blends, shall not be used. • High visibility striping sewn on *arc-rated clothing* should be *arc-rated* (e.g. *3M high visibility striping is arc-rated*).	

Table M-14 – Electrical Specific PPE, Tools & Equipment Specifications

ES PPE, Tools or Equipment	Minimum Specification	Reference Standards
Hearing Protection	• Class A rated for an 8-hour *Time-Weighted Average (TWA)* noise exposure of up to 105 dBA. • Hearing protection must be worn when *working on energized electrical conductors or circuit parts* when there is a risk of exposure to an *arc flash* and particularly when the *calculated arc flash incident energy exposure* is greater than 1.2 cal/cm^2 or > *Arc Flash PPE Category 1* (e.g. onset of a second degree burn, worker inside the *Arc Flash Boundary*). • Canal insert ear plug styles – cylindrical, tapered, hex, etc. • Earmuffs are to be made of a mixture of plastics and foam, non-conductive. Soft ear cushions. ***Note:*** *While using arc flash suit hoods, ear muffs with behind the head or under the hard cap applications shall be used when required. The ear muffs must not interfere with the protective sides of arc-rated faceshields. Ear muff and arc flash faceshield combinations exist and therefore when ear muffs are required this combination shall be used.*	CSA Z94.2 Hearing Protection Devices – Performance, Selection, Care and Use. ANSI S3.19 Hearing Protection Standard.

Table M-14 – Electrical Specific PPE, Tools & Equipment Specifications

ES PPE, Tools or Equipment	Minimum Specification	Reference Standards

Raingear	• Shall meet the requirements of *ASTM F 1891*.
	• For performing *energized electrical work* in inclement weather, the outer layer must be FR material with an *arc rating (e.g. ATPV or E_{BT})* appropriate for the task. This includes rain gear and winter wear.
	• Raingear shall include reflective material for increased visibility as per *ANSI/ISEA 107, Performance Class 3*.
	• Style – full-length raincoats and rain jackets with detachable hoods, and rain pants.
	• *ASTM F 1506*, arc-rated clothing must be labelled as follows:
	  • Manufacturer
	  • Arc Thermal Performance Value (ATPV) rating in calories per square centimetre
	  • Care instructions
	  • Fabric fiber content (e.g. oz weight/sq yard)
	  • Garment size
	  • Manufacturer tracking code
	  • Meets requirements of Performance Specification *ASTM F 1506*
		ASTM F 1891, Standard Specification for Arc and Flame Resistant Rainwear.

Table M-14 – Electrical Specific PPE, Tools & Equipment Specifications

ES PPE, Tools or Equipment	Minimum Specification	Reference Standards
Insulated and Insulating Hand Tools	• Shall meet the requirements of *ASTM F 1505*. • Approved insulated hand tools shall be rated for 1000 VAC and 1500 VDC. • Covered with two layers of material – inner layer provides the electrical insulation and the outer layer provides mechanical protection for the electrical insulation. • Recommended *Journeyman Electrician Kit – Side Cutting Linesman Pliers, Diagonal Cutting Pliers w/ angled head, Long-Nose Pliers, Tongue and Groove Pliers, High-Leverage Cable Cutter, screwdrivers: flat head, Robertson, Phillips, and fuse puller(s)*. • Heavy-duty soft tool case or hard plastic case should be provided for storing and transporting tools. • Do not store with normal tools to avoid damage to insulation. • For UPS Battery work special tools above those mentioned above will be required and should only be used for UPS Battery work. • Must have double triangle and voltage level.	ASTM F 1505 Standard Specification for Insulated and Insulating Hand Tools. CAN/ULC – 60900 Hand Tools for Live Working up to 1000 V A.C. and 1500 V D.C.

Table M-14 – Electrical Specific PPE, Tools & Equipment Specifications

ES PPE, Tools or Equipment	Minimum Specification	Reference Standards
Hot Sticks (Live-Line Tools)	• Meets the requirements of *ASTM F 711*. • Constructed from Fibreglass-Reinforced Plastic (FRP). • *Hot Sticks* should be equipped with hook ends that will accept both hi-voltage testers and *temporary protective ground* cable clamps (e.g. custom hot sticks may be supplied with *temporary protective grounds*). • Special attachment means are to be specified when these hot sticks are used for replacing fuses or operating disconnection means. • Length and diameter are to be specified as per specific work task requirements and design of the equipment/electrical distribution system. • All *hot sticks* must be tested by the manufacturer to conform to *ASTM F 711* (e.g. 100kV per foot of length for FRP material). • Recommend that a unique tag be assigned to each hot stick to be referenced for tracking in preventive maintenance scheduling and referenced in procedures. • Storage container of appropriate size shall be purchased and used.	ASTM F 711, Standard Specification for Fiberglass-Reinforced Plastic (FRP) Rod and Tube Used in Live-Line Tools. ASTM F 2522 Standard Test Method for Determining the Protective Performance of a Shield Attached on Live Line Tools or on Racking Rods for Electric Arc Hazards.

Table M-14 – Electrical Specific PPE, Tools & Equipment Specifications

ES PPE, Tools or Equipment	Minimum Specification	Reference Standards
High Voltage Proximity Detectors	• Typical range 240VAC to 500kVAC. Selector switch preferred over sliding bar type. • Visual and an audible annunciation should be provided. • Self checking both visual and audible should be specified. • Sensor detects the radiated field which surrounds energized conductors. Radiated field strength increases with voltage and decreases quickly with distance or earth shielding. • The radiated field from a cable of closely bunched conductors supplied by three phase power tends to cancel. • Typical detecting distances for various voltage levels and configurations of electrical circuits should be consulted with the manufacturer's instructions for use. • Follow manufacturer`s instructions for use included with the detector. • Use with *approved hot stick* only. • Recommend stored in manufacturer or third party hard storage case.	No specific approvals available. Refer to the manufacturer. ANSI/ISA Standard S82.02.01, Safety Standard for Electrical and Electronic Test Measuring, Controlling, and Related Equipment - General Requirements. IEC 61010 Safety Requirements for Electrical Equipment for Measurement, Control, and Laboratory Use – Part 1 General Requirements. IEC 61243-1, -2, -3 – Live working – voltage detectors.

Table M-14 – Electrical Specific PPE, Tools & Equipment Specifications

ES PPE, Tools or Equipment	Minimum Specification	Reference Standards
Low Voltage Proximity Detectors	• CSA, UL or equivalently approved. • Rated to CAT III or IV, 1000 V. • Dual Sensitivity. • LED indicating light. • Audible annunciation. • Detects from 90 to 600 VAC. Do not detect DC. • Should be equipped with convenient pre-use test feature. Self checking visual and/or audible. • Suitable for indoor and outdoor applications. • Required ambient temperature operation should be specified. • Not used for low voltage as primary tester for *absence of voltage*, should use *direct contact voltage tester* for testing for *absence of voltage* on low voltage systems. • Indicates when batteries are dead.	CSA C22.2.1010 Safety Requirements for Electrical Equipment for Measurement, Control, and Laboratory Use – General Requirements. ANSI/ISA Standard S82.02.01, Safety Standard for Electrical and Electronic Test Measuring, Controlling, and Related Equipment - General Requirements. IEC 61010 Safety Requirements for Electrical Equipment for Measurement, Control, and Laboratory Use – Part 1 General Requirements.

Table M-14 – Electrical Specific PPE, Tools & Equipment Specifications

ES PPE, Tools or Equipment	Minimum Specification	Reference Standards
Test Equipment (Digital Multi-meter)	• CSA, UL or equivalently approved. • All meters must be at a minimum Category III, 600V rated. Use Category IV where required. User to determine appropriate Category for transient overvoltage protection suitable to the testing location in the electrical system. • Recommend equipped with fused leads (e.g. optional). • The banana plug that connects the leads to the meter must be shielded to prevent contact with a grounded surface in case either of the plugs slips out of the receptacle. • Probes shall contain a knurled section near the end to help prevent the worker's hand from slipping and contacting the energized conductor. If this knurl is removed, certification of the meter is voided. • Must be stored in protective storage bag/case provided by the manufacturer. Do not store in tool pouch or box where other tools can damage the meter. • If internal fuse is every replaced, it must be replaced with identical fuse. • If available order with stand and/or magnetic holder for attachment to electrical equipment.	CSA C22.2.1010 Safety Requirements for Electrical Equipment for Measurement, Control, and Laboratory Use – General Requirements. ANSI/ISA Standard S82.02.01, Electrical and Electronic Test Measuring, Controlling, and Related Equipment, General Requirements IEC 61010 Safety Requirements for Electrical Equipment for Measurement, Control, and Laboratory Use – Part 1 General Requirements. UL 1244 Standard for Electrical and Electronic Measuring and Testing Equipment.
Temporary Protective Grounds (TPG)	• Shall meet the requirements of *ASTM F 855*. *Temporary protective grounds* that are installed on an electrical circuit must have a fault duty rating at least equal to the *available fault-current capacity* at the point in the circuit where the grounds will be installed and for the *assumed clearing time*. • *Temporary protective grounds* must be tagged or marked to indicate the rating assigned by the manufacturer.	ASTM F 855, Standard Specifications for Temporary Protective Grounds to be Used on De-energized Electric Power Lines and Equipment. ASTM F 2249, Standard Specification for In-Service Test Methods for Temporary Grounding

Table M-14 – Electrical Specific PPE, Tools & Equipment Specifications

ES PPE, Tools or Equipment	Minimum Specification	Reference Standards
	• *Temporary protective grounds* shall have an impedance low enough to cause immediate operation of protective devices. • *Temporary protective grounds* shall have ground clamps that are designed specifically for grounding the intended equipment, (i.e. ball style ground studs installed in the switchgear or equipments vs bus bar style.) • Recommend that a unique tag be created and placed on the *temporary protective ground cables* for reference in *preventive maintenance and procedures*. • When installed and left in service the equipment should be marked with a sign indicating *"Danger - Temporary Protective Grounds" are installed* (e.g. magnetically applied sign on the outside of MCC or SWGR). • The installation sequence starts with the ground connection first then continues by connecting to each subsequent phase connection. The removal sequence starts with each phase and ends with removal of the ground connection. *Ground truck and test devices* are equipment specific and can be user configurable. Verify for proper application and correct configuration before use. A *ground truck and test device* should be used as a test device first when confirming *absence of voltage*, then reconfigured to ground the appropriate location. • Locks should be applied to the cover door when configured appropriately. When a *Ground Truck and Test Device* is installed and left in service the equipment should be marked with a sign indicating *"Danger – Temporary Protective Grounds" are installed* (e.g. magnetically applied sign on the outside of MCC or SWGR).	Jumper Assemblies Used on De-Energized Electrical Power Lines and Equipment IEEE Std 1246 IEEE Guide for Temporary Protective Grounding Systems Used in Substations CAN/ULC – D 61230 Live Working – Portable Equipment for Grounding and Bonding

Table M-14 – Electrical Specific PPE, Tools & Equipment Specifications

ES PPE, Tools or Equipment	Minimum Specification	Reference Standards
Fall Protection	Minimum performance criteria for arc resistance of harnesses and shock absorbing lanyards shall meet *ASTM F 887* requirements.	ASTM F 887, Standard Specifications for Personal Climbing Equipment.
Non-Conductive Ladders	• Fibreglass construction. • Side rails non-conductive fibreglass.	ANSI A14.3 Ladders – Fixed – Safety Requirements ANSI A14.4 Job-Made Wooden Ladders Safety Requirements for ANSI A14.5 Ladders – Portable Reinforced Plastic – Safety Requirements CSA CAN3 – Z11 Portable Ladders
Conductive Suit	• Less than 100 Ω, made of flame resistant fibre and stainless steel fibre, repel water, tear resistant. • Does not degrade with time or number of washings.	IEC 895 Specification for Conductive Clothing
Raingear	• The *Arc Resistant* PVC Suit. • Rain Suit all comply with *ASTM F1891* and *ASTM D64B* standards. • Rain Suit also meets *Class 3 ANSI/ISEA 107* Standard for *High Visibility Safety Apparel*. • Meet *ANSI 107* and *ASTM F1671* standard.	ASTM F1891 ASTM D64B standards ANSI/ISEA 107
Static Belt	• The belt, made of the same material as Conductive Suits, should be buckled snugly around the waist, next to bare skin and has a six-foot lead that can be attached to the steel structure.	IEC 895

Table M-14 – Electrical Specific PPE, Tools & Equipment Specifications

ES PPE, Tools or Equipment	Minimum Specification	Reference Standards
Conductive Boots	• Meets specifications for *ANSI Class 75* steel toe footwear. • Chemical and liquid resistant. • Meets requirements of *CSA Standard Z195* or equivalent.	ANSI Class 75, CSA Z195
Linemen's Insulated Handheld Tools	• Meet or exceed *ASTM F1505* and *IEC 60900* standards. • Necessary for compliance with *OSHA 1910.333 (c)(2)*, and *NFPA 70E*. • Clearly marked with the 1000-volt rating symbol and dielectrically tested at 10, 000 V. • Two layers of insulation must provide protection against electric shock and the outer layer must be flame-resistant.	ASTM F1505, IEC 60900, OSHA 1910.333, NFPA 70E
Insulated Ropes	• Must be properly maintained polypropylene synthetic rope. • Rope lines used must be constructed without wire reinforcement, and be at least ½ in (12.7mm) in dia. • Must meet *ANSI/IEEE 516* requirements.	ANSI/IEEE 516
Linemen's Holsters	• Reinforced for extra wear.	
Linemen's Tool Belt	• Linemen tool belt must be "D" size. • Should be adjusted based on *ASTM F887*	ASTM F887
Portable Bond Mats	• Complies with the *Occupational Safety and Health Administration (OSHA) 1910.269* standard. • Must have ground Extension Cable and visibility edges which helps to ensure the operator does not step off of the Bond Mat accidently.	OSHA 1910.269
Pole Straps	• The breaking strength must meet as per *ASTM F887* standard.	ASTM F887

Table M-14 – Electrical Specific PPE, Tools & Equipment Specifications

ES PPE, Tools or Equipment	Minimum Specification	Reference Standards
	• If the strap is made of leather, it shall show no cracking on the grain side when bent slowly over a 1⁄2-in. (12.7 mm) diameter mandrel, grain side out, through an angle of 180°. The leather shall not show piping or wrinkling of the grain side when bent over a mandrel 1-in. (25.4 mm) in diameter, with the grain side in, through an angle of 180. • If fabric is used for the construction, it shall be a minimum of four plies of thickness of folded nylon, or of woven nylon, or equivalent material, constructed in such a way that no raw edges are exposed. The fabric shall be impregnated with neoprene or its equivalent, so that the plies or strands are not readily separable, except by chemical means.	
Fully Body Harness with Tower and Climbing Harness	• Shall be a part of a *Personal Fall Arrest System (PFAS)*. • Meets *OSHA 1910.66, 1926.104, 1926.502, ANSI A10.32, Z359.1* and *CSA Z259.10* specifications.	OSHA 1910.66, 1926.104, 1926.502, ANSI A10.32, Z359.1, CSA Z259.10
Pole Climbers with Pads and Straps	• Meets or exceeds applicable *OSHA* requirements. • Meets the stringent *CSA Z259* standard. • Meets *ASTM F 887, Specifications for Personal Climbing Equipment*.	CSA Z259 ASTM F 887
Arial Lift with Bucket and Derrick	• Meet *ANSI/SIA A92.2* standards. • Meet *ANSI/SIA A92.3* standards. • Meet *ANSI/SIA A92.5* standards. • Meet *ANSI/SIA A92.6* standards. • The derrick must meet *ANSI/ASSE A10.31* Standard.	ANSI/SIA A92.2 standards ANSI/SIA A92.3 standards ANSI/SIA A92.5 standards ANSI/SIA A92.6 standards ANSI/ASSE A10.31

Table M-14 – Electrical Specific PPE, Tools & Equipment Specifications

ES PPE, Tools or Equipment	Minimum Specification	Reference Standards
Fall Protection Equipment	• Meet *ASTM F 887* requirements. • *ASTM F 887* only will be labelled for 40 cal/cm^2 *incident energy level*.	CAN/CSA-Z259.2.1, CAN/CSA-Z259.2.2, CAN/CSA-Z259.12, CAN/CSA-Z259.14 ASTM F 887
Portable Phase Comparator	• Meets the minimum length of insulating material according to *IEC/EN 61481 (DIN VDE 0682 Part 431)*.	IEC/EN 61481
Rescue Kit from Pole	• Must contain: -Safety rope -Snap hooks -Body Belt -Pole Strap -Tool Pouch -Knife -Cable Cutter -Class 0 (1000V) Rubber Insulating Gloves • Meet requirement in accordance with *CSA Z259.14*	

APPENDIX N. ELECTRICAL SPECIFIC PPE, TOOLS & EQUIPMENT RECOMMENDED CARE, USE & MAINTENANCE

Table N-15 – Electrical Specific PPE, Tools & Equipment Recommended Care, Use & Maintenance

ES PPE, Tools & Equipment	Recommended Care, Use & Maintenance	Reference Standard
Hard Hat	• Do not paint hard hat as paint can cover up cracks/damage. • Do not apply stickers to hard hats. • Solvents and other harsh cleaners should be avoided. Use mild soap and warm water. • Use manufacturer's instructions for proper cleaning guidelines. Recommended to clean hard hats by immersing for one minute in hot (approximately 60˚ or 140˚F) water and mild soap, scrubbing and rinsing in clear water. • If hard hat has expired remove from use. • Replace suspension as per manufacturer`s requirements. • Ensure suspension is not damaged.	CSA-Z94.1, Industrial Protective Headwear ANSI Z89.1, Requirements for Industrial Head Protection
Safety Glasses & Arc-rated Faceshield or Arc Flash Hood Lens	• Mild soap or detergent and warm water are the best solution for cleaning safety glasses or lenses. • Solvents should not be used. • For special lenses such as those with an anti-fog coating, a standard lens cleaner or a solution of mild detergent and warm water may be used. • For drying, a soft lint-free cloth is the best choice. • To avoid scratches, a dry lens never should be cleaned with a paper towel or untreated paper. • Check with manufacturer who may supply cleaning materials for their specific apparatus. • Consider anti-fog solutions for winter use.	CSA-Z94.3, Eye and Face Protectors ANSI Z87.1, American National Standard for Occupational and Educational Eye and Face Protection Devices

Table N-15 – Electrical Specific PPE, Tools & Equipment Recommended Care, Use & Maintenance

ES PPE, Tools & Equipment	Recommended Care, Use & Maintenance	Reference Standard
Rubber Insulating Line Hose and Covers	• Check for damage. • Clean as required. • Mild soap or detergent and warm water are the best solution for cleaning	ASTM F 478, Standard Specification for In-Service Care of Insulating Line Hose and Covers
Rubber Insulating Mats	• Check for damage. • Clean as required. • Mild soap or detergent and warm water are the best solution for cleaning	ASTM D 178, Standard Specification for Rubber Insulating Matting
Rubber Insulating Blankets	• Check for damage. • Clean as required. • Mild soap or detergent and warm water are the best solution for cleaning	ASTM F 479, In-Service Care of Insulating Blankets
Rubber Insulating Sleeves	• Check for damage. • Clean as required. • Mild soap or detergent and warm water are the best solution for cleaning	ASTM F 496, Standard Specification for In-Service care of Insulating Gloves and Sleeves
Rubber Insulating Gloves	• Ensure hands are clean before inspecting *rubber insulating gloves*. Ensure long finger nails are trimmed. • Check to ensure *rubber insulating gloves* are date stamped with last test date and ensure <u>current to within the last 6 months</u>. • Check to ensure size is appropriate. • Ensure that leather protectors are correct for the associated *rubber insulating glove Class* (e.g. same Class and size), that minimum distance between leather protector cuff and rubber insulating glove cuff is acceptable. • If gloves are used without the *Leather Protectors* in limited use situations, the glove Class must be increased by one Class and inspected and retested before returning to normal use with	ASTM F 496, Standard Specification for In-Service care of Insulating Gloves and Sleeves ASTM F 1236 Standard Guide for Visual Inspection of Electrical Protective Rubber Products

Table N-15 – Electrical Specific PPE, Tools & Equipment Recommended Care, Use & Maintenance

ES PPE, Tools & Equipment	Recommended Care, Use & Maintenance	Reference Standard
	Leather Protectors. • Complete an *air test* by rolling up the glove or using a glove inflator. Listen for any air leaks along the length of the glove. Use of *glove inflator* is recommended. • Can be used with *manufacturer's approved glove talc*. • *Cotton insert gloves* are available for use from manufacturer. Thoroughly check the inside and outside of the rubber insulating glove both visually and by feeling the surface of the rubber insulating glove for any damage. Look for abrasions, scratches, age cracks, cuts, hard spots, nicks, snags, ozone cracking, puncture, soft spots, tracking and any abnormal irregularity in the gloves which should have a smooth finish. • Ensure gloves are stored in *manufacturer`s recommended storage bag or case*. Store flat, do not store folded, creased, inside out or compressed. • Store the gloves in storage bag with the glove openings down into the bag. • Store the gloves in a cool, dry, and dark location. • Do not store near large power generators or other sources of ozone. • When stored inside trucks, keep in the storage bag, and away from windows, batteries, heat sources, fuel supplies or container. Glove bags should be hung if possible. • Wash the *rubber insulating gloves* as per *manufacturer`s requirements* in mild soap and warm water not to exceed 71 °C (e.g.160 °F). Ensure *leather protector gloves* are not contaminated or damaged. The *leather protectors* are required to protect the *rubber insulating gloves* from damage, and also provide *arc flash*	

Table N-15 – Electrical Specific PPE, Tools & Equipment Recommended Care, Use & Maintenance

ES PPE, Tools & Equipment	Recommended Care, Use & Maintenance	Reference Standard
	protection which could be compromised if the leather is damaged or contaminated. • Workers are not permitted to have long finger nails while using *Rubber Insulating Gloves (RIG)*. • Do not wear jewellery on your fingers inside *rubber insulating gloves* they could damage the glove. To accommodate testing two pairs of *rubber insulating gloves* should be purchased when individually issued. Where gloves are shared ensure adequate number of pairs available to allow *rubber insulating gloves* to be sent in for testing and still have appropriate number available for use.	
Leather Protectors	• Must be worn over the *Rubber Insulating Gloves*, except in limited use situations where good finger dexterity is necessary and possibility of physical damage to the glove is unlikely. • Check to ensure the same Class and size as the r*ubber insulating glove*. • Should not be used alone for *shock protection*. • Should not deform the shape of the rubber insulating gloves when worn. • If they are used for any other purpose than with the *rubber insulating gloves* they cannot be re-used with the *rubber insulating glove*. • Keep them clean from oil, grease, chemicals, and similar materials. • Cannot be used if they have holes, are torn, are contaminated or other damage. • Ensure you purchase spare pairs or *leather protectors* so they are available.	ASTM F 696 Standard Specification for Leather Protectors for Rubber Insulating Gloves and Mittens

Table N-15 – Electrical Specific PPE, Tools & Equipment Recommended Care, Use & Maintenance

ES PPE, Tools & Equipment	Recommended Care, Use & Maintenance	Reference Standard
Dielectric Footwear	• Use a protective coating to make the footwear water-resistant. • Repair and replace worn or defective footwear. • Since an effective retest is not viable and recommended as per standard, dielectric footwear should not be considered as a primary protection against electrical shock. • Mild soap or detergent and warm water are the best solution for cleaning.	CSA Z195.1 Guideline on Selection, Care and Use of Protective Footwear ASTM F 1117, Standard Specification for Dielectric Overshoe Footwear.
Arc-rated Clothing	• Launder and repair arc-rated (e.g. FR) clothing as per *ASTM F 1449/ NFPA 2112*. • If contaminated with flammable substance do not use. • Recommend *arc flash suits* not be sent to industrial launder. Special care must be taken when removing *arc flash suit hood material* from hard hat and faceshield. • Do not mix *arc-rated* garments with items made of other materials in the same wash. • Do not use bleaches, fabric softeners or other treatments unless recommended by the manufacturer. Use mild detergent only. • Observe manufacturer's recommendation for laundering instructions. • The arc rating clothing should not be washed in temperatures over 74 ºC or 165 ºF. • For *arc flash suits* after washing, dry on low heat and remove immediately. Do not line dry. • For clothing ensure when used all buttons and fasteners are done up completely. • If ripped, torn, fasteners used not working or fabric weight is worn down from washing or use must be discarded. • Care should be taken when putting on an arc flash suit, ensure you zip up all openings, close	ASTM F 1449, Standard Guide for Care and Maintenance of Flame Resistant Clothing NFPA 2112, Standard on Flame-Resistant Garments for Protection of Industrial Personnel Against Flash Fire.

Table N-15 – Electrical Specific PPE, Tools & Equipment Recommended Care, Use & Maintenance

ES PPE, Tools & Equipment	Recommended Care, Use & Maintenance	Reference Standard
	all Velcro fasteners, close the Velcro collar and other Velcro straps are secured, and that the arc flash hood flaps are lying flat over top of the jacket, do not tuck into the jacket. • Any damage will be repaired using the same arc-rated materials as the original garment and FR thread.	
Insulated and Insulating Hand Tools	• Store *insulated hand tools* separate from normal tools. • Keep tools clean from contamination. • Wash with mild soap in warm water. • Store in separate tool box, hard case or wrap to protect the tools from damage to insulation. • Use the right tool for the work task when required to be used. • Only use the *insulated hand tools* for *energized electrical work*.	ASTM F 1505 Standard Specification for Insulated and Insulating Hand Tools.
Hot sticks (Live-Line Tools)	• Check for identification tag. • Check for sticker for proof of tested current. • Clean as per manufacturer's recommendations. • Keep free of contamination. • Ensure mechanically fit for use. • Ensure stored in manufacturer's approved bag, hard case or tube.	IEEE Standard 978, Guide for In-Service Maintenance and Electrical Testing of Live-Line Tools.
Temporary Protective Grounds (TPG) (e.g. ground clusters, ground chains, Ground Truck	• Check for identification tag, and indication of *fault current carrying capacity* at *assumed clearing time*. • Check for sticker for proof of tested current for *temporary protective grounds*. • Store in protective box. • Clean as per manufacturer's recommendations. • Keep free of contamination.	ASTM F 855, Standard Specifications for Temporary Protective Grounds to be Used on De-energized Electric Power Lines and Equipment.

Table N-15 – Electrical Specific PPE, Tools & Equipment Recommended Care, Use & Maintenance

ES PPE, Tools & Equipment	Recommended Care, Use & Maintenance	Reference Standard
and Test Device)	• Ensure conductor insulation and ferrule connections are not damaged. • Ensure clamps are intact and operate properly. • Ensure appropriate hot stick for application is available. • For *Ground Truck & Test Device* use suitable storage cover so that it won't get contaminated with dirt, dust, or any conductive object or substance. • For *Ground Truck and Test Device* inspect before use, and clean as required. • For *Ground Truck and Test Device* ensure cables used are not damaged, do not store loose, store connected to the *Ground Truck & Test Device*.	
Non-Conductive Ladders	• Ensure not damaged. • Ensure mechanically fit for use. • Keep clean and free of dirt and other contamination.	ANSI A14.3 Ladders – Fixed – Safety Requirements ANSI A14.4 Job-Made Wooden Ladders Safety Requirements for ANSI A14.5 Ladders – Portable Reinforced Plastic – Safety Requirements CSA CAN3 – Z11 Portable Ladders

Table N-15 – Electrical Specific PPE, Tools & Equipment Recommended Care, Use & Maintenance

ES PPE, Tools & Equipment	Recommended Care, Use & Maintenance	Reference Standard
Lifting Devices (Breaker Trolley or Hoist)	• Annual inspection for safe and proper operation is required. • Check fluid levels (e.g. battery electrolyte if electrical, hydraulic fluid reservoir if hydraulics used). • Perform preventative lubrication. • Verify user control operations, etc. • Ensure cable system is not damaged.	There is no standard for Lifting Devices. Reference manufacturer's manual. Canadian Standard Association, Safety Standard for Operation, Maintenance and Inspection of Overhead Cranes, Gantry Cranes, Monorails, Hoists, and Trolleys, CSA B167 Canadian Standard Association, Safety Code for Material Hoists, CSA - Z256 - M87

Rack In/Out Tools	• Perform proper tool management techniques for specialized electrical tools:
	  ○ Appropriate storage.
	  ○ Device tagging and labelling
	• Ensure correct tool is available for the specific equipment (e.g. fixed shaft, or articulated shaft so hand won't hit the floor when used).
	• If possible use longest tool length available to increase your working distance.
	• Check tool to ensure no damage and components functioning as required.
		Supplied by original equipment manufacturer.

APPENDIX O. RECOMMENDED PRE-USE CHECKS FOR ELECTRICAL SPECIFIC PPE, TOOLS & EQUIPMENT

Table O-16 – Electrical Specific PPE, Tools & Equipment Pre-Use Inspection & Checks

ES PPE, Tools & Equipment	Pre-Use Checks
Arc-rated Clothing	Must be clean, no dirt, no contamination due to chemicals, hydrocarbon stains, NO tears, rips punctures, or frays of material. All zippers, buttons, snap and Velcro must function properly and be covered by fabric. Check for the proper arc rating (e.g. ATPV or E_{BT}) on the manufacturer's labels on the inside of the garment. Check correct size for the wearer.
Ear Plugs or Ear Muffs	Ensure canal insert style ear plugs are clean, inserted completely and are not damaged. Ensure ear muffs are made of non-conductive materials and that they are not damaged.
Hard Hat	No cracks, stickers, paint, not out of date, webbing and adjusting mechanism works, check harness for proper adjustment. Clean hard hats by immersing for one minute in hot (approximately 60˚ or 140˚F) water and mild soap, scrubbing and rinsing in clear water. Ensure for electrical use that the hard hat is labelled Class E.
Rubber Insulating Gloves	Ensure hands are clean before inspecting and finger nails are cut short. Store in a dry, cool, location out of the direct sunlight. Do not store them inside out. Store flat in the original manufacturers storage bag with the glove openings pointing into the bag. Keep the *rubber insulating gloves and leather protectors* clean. <u>First check for a date stamp for testing to ensure current within the last 6 months</u>, visually check for contamination, cracking, tears punctures and perform an air test to check for any leaks (e.g. roll up test or use a glove inflator pump. If you use a *glove inflator pump* do not over inflate the glove.). After the glove is full of air listen for any leaks, check finger joints for cracks or wear, check for tears, punctures, cuts, ozone cutting or checking, embedded foreign objects and texture changes in the rubber such as swelling, softening, hardening, sticky or inelastic.

Table O-16 – Electrical Specific PPE, Tools & Equipment Pre-Use Inspection & Checks

ES PPE, Tools & Equipment	Pre-Use Checks
	Ensure *Class* is adequate for *working voltage* (e.g. Class 0 for 600VAC). Use only *approved rubber insulating glove talc/dust/powder*. Remove *rubber insulating gloves* from service if damaged. Use with matching Class and Size of *leather protectors*. See *ASTM F 1236 Standard Guide for Visual Inspection of Electrical Protective Rubber Products* for specific details. If you find that gloves are not suitable for use, cut off the fingers and discard.
Leather Protectors	Must be clean with no oil, chemicals, mud, dirt stains, or damage. Should not be used if ripped or torn. Check inside of gloves to ensure no foreign material has entered which could cause damage to the *rubber insulating glove*. Ensure that the gap between the cuff of the *leather protectors* and the *rubber insulating glove* is adequate. Ensure *leather protector* is for the right Class and Size of *rubber insulating gloves*. Discard if damaged and replace with *approved leather protector gloves* for *rubber insulating gloves*. Ensure spare pairs of *leather protectors gloves* are available.
Balaclava	Clean, no rips or tears. Check for the proper *arc rating* (e.g. *ATPV or* E_{BT}) rating on the manufacture label on the inside of the garment.
Hot Sticks (Live-Line Tools)	<u>First, check for a date stamp for testing to ensure current within the last 24 months</u>. Check for any cracks, splinters, no mechanical damage. Clean if required following manufacturer's instructions. Check mechanical functions and ensure working properly. If telescopic or folding ensure that when extended that method used to secure is working properly.

Table O-16 – Electrical Specific PPE, Tools & Equipment Pre-Use Inspection & Checks

ES PPE, Tools & Equipment	Pre-Use Checks
	If specialized connection for *temporary protective grounds* ensure it works properly. If attaching an *arc flash shield*, ensure shield is properly secured and at correct location on the *hot stick*. Ensure *hot stick arc flash shield* is not cracked or damaged.
High and Low Voltage Proximity Detectors and Indicators	Ensure the detector is clean, no visible damage to case, such as cracks. Where a separate adapter is provided for connection to *hot stick* ensure you have it and it isn't damaged. Check as per manufactures instruction to ensure functional. Ensure self test visible and audible indicators are working. Test function on a *known voltage source* before and after use (e.g. **Test-Before-Touch**). Detector is to be used for testing for the *absence of voltage*. Ensure new batteries are readily available.
Test Instrument (Digital Multi-Meter)	Ensure meter is clean, no visible damage to case, such as cracks. Completely inspect test leads for any damage to plugs, cable insulation and if fused leads correct fuse installed. Check the fuse installed in the meter is the correct fuse as recommended by the manufacturer. Ensure meter is on correct setting and that test leads are plugged into appropriate locations. Ensure meter is suitably rated based on *Category for transient overvoltage protection*. If you replace the leads replace with same manufacturer is recommended. Ensure new batteries are readily available.
Temporary Protective	First check for a date stamp for testing to ensure current within the last 36 months.

Table O-16 – Electrical Specific PPE, Tools & Equipment Pre-Use Inspection & Checks

ES PPE, Tools & Equipment	Pre-Use Checks
Grounds (TPG) (and Ground Truck & Test Devices)	Check all mechanical items for proper functionality. Clamps, screw connectors, cable terminations to clamps, ferrules and cable covering to be checked for any damage. Ensure that the conductor size is suitable for the available three phase bolted fault current level at the assumed clearing time. When *temporary protective grounds* have been installed, ensure you post a "*Danger Temporary Protective Grounds*" warning sign on the outside of the electrical equipment that they have been applied to. Clean the *temporary protective grounds* as required. For *Ground Truck & Test Devices* ensure clean before use. Ensure conductors to be used for configuration are not damaged. Check stabs to ensure clean and not damaged, dielectric grease may be used on stabs, follow *manufacturer's recommendations*.
Arc-rated Faceshields and Arc Flash Suit Hoods	Check hard hat, suspension ok. Check inside of faceshield is clean and no damage to lens (e.g. cracked or excessively scratched), arc-rated clothing on the *arc flash suit hood* has no rips, tears etc. Ensure all plastic components (e.g. used to secure the lens or extensions on the sides of the faceshield) and plastic mechanical components (that allow shield to move up from the face) are not damaged and work properly. Ensure faceshield or *arc flash suit hood* is properly secured in hard hat. If a cooling fan is used in the *arc flash hood* ensure is it working and connected properly. Ensure new batteries are readily available for the cooling fan.
Insulated Hand Tools	Check to ensure no damage to insulation and tools are clean. No taping of parts with electrical tape or heat shrink sleeve allowed.

Table O-16 – Electrical Specific PPE, Tools & Equipment Pre-Use Inspection & Checks

ES PPE, Tools & Equipment	Pre-Use Checks
	Proper storage to ensure that they won't be damaged, do not store with normal tools. Check for double triangle certification, and 1000V rated. If you observe *yellow insulation through outer orange insulation* DO NOT USE the tool.
Test Instruments and Equipment	Test leads, cables, power cords, probes, and connectors shall be visually inspected for external defects or damage before they are used. Ensure the case for the test equipment is not damaged (e.g. cracks). Ensure new batteries are readily available.
Rubber Insulating Mats / Sleeves / Blankets	<u>First check for a date stamp for testing to ensure current within the approved frequency if specified as required.</u> Ensure clean, and inspect for any signs of damage before they are used. See *ASTM F 1236 Standard Guide for Visual Inspection of Electrical Protective Rubber Products* for specific details.
Footwear (Safety Boots)	Keep them clean. Ensure footwear laces are not broken. It is noted that if the footwear are excessively damaged or dirty they may not perform as intended. If steel toe is exposed do not use. Check for *Class 1*, and green tag with *Greek Omega sign* indicated the boots are *properly electrically rated*. Do not use *dielectrically rated safety boots* as your *primary protection from electrical shock*.

Notes:

A. *If any item is damaged remove it from service, tag it out of service, and discard or have it repaired if applicable.*

APPENDIX P. ELECTRICAL SPECIFIC PPE, TOOLS & EQUIPMENT FREQUENCY OF TEST INTERVALS

Table P-17 – Electrical Specific Tools & Equipment Frequency of Test Intervals

Electrical Specific PPE, Tools & Equipment	Frequency of Test Intervals	Governing Standard for Testing Requirements
Arc Flash Protective Clothing	No in-service tests can be applied.	Not technically feasible, would be destructive.
Arc-rated Faceshields or Arc Flash Suit Hoods	No in-service tests can be applied.	Not technically feasible, would be destructive.
Rubber Insulating Gloves	Before first use and <u>every 6 months</u>. See **Note 1**. If used frequently then you may want to increase test frequency. See **Note 2**. Must be tested at AC or DC retest voltage for at least 1 minutes and not to exceed 3 minutes. United States *OSHA 1910.137(b)(2)(viii)* requires electrical re-testing of rubber insulating gloves before first issue and every six months thereafter. The gloves may not be placed into service unless it has been electrically tested within the previous 12 months. *Rubber insulating gloves* used without *leather protectors* shall not be used with protectors until inspected and electrically retested. In Ontario, Canada, Class 1 and higher must be tested every 3 months.	ASTM F 496
Leather Protectors	No in-service tests can be applied.	Replace if contaminated or damaged with approved *leather protectors*.

Table P-17 – Electrical Specific Tools & Equipment Frequency of Test Intervals

Electrical Specific PPE, Tools & Equipment	Frequency of Test Intervals	Governing Standard for Testing Requirements
Rubber Insulating Mat	No in-service tests are specified.	ASTM D 178
Rubber Line Hose	Upon indication that insulating value is suspect.	ASTM F 478
Rubber Insulating Covers	Upon indication that insulating value is suspect.	ASTM F 478
Rubber Insulating Sleeves	Before first use and every 12 months. See **Note 2**.	ASTM F 496
Rubber Insulating Blankets	Before first use and every 12 months. See **Note 2**.	ASTM F 479
Temporary Protective Grounds (TPG)	Before first use and every 36 months. If used frequently then decrease test frequency. Should be subjected to the 3-cycle or 15-cycle voltage-drop tests defined in the *ASTM F 855* standard on a regular basis as determined by condition of use. However, the test interval must not exceed three years. Repaired or modified ground clusters must be tested to ensure that the repaired equipment will pass the standard 30-cycle or 15-cycle voltage-drop values permitted by *ASTM F 855*.	ASTM F 855 ASTM F 2249 ***Note**: There is no specific frequency of testing listed in the Standards above, industry accepted best practice is 36 months or more frequent depending on usage.*

Table P-17 – Electrical Specific Tools & Equipment Frequency of Test Intervals

Electrical Specific PPE, Tools & Equipment	Frequency of Test Intervals	Governing Standard for Testing Requirements
Hot Stick, Rescue Hot Stick, or Static Discharge Hot Stick (Live-Line Tools)	Before first use and every 24 months. If used frequently then decrease test frequency.	IEEE 978 Guide for In-Service Maintenance and Electrical Testing of Live-Line Tools ***Note**: There is no specific frequency of testing listed in the Standard above, industry accepted best practice is 24 months or more frequent depending on usage.*
Test Instruments (Digital Multi-meter or Voltage Proximity Detector)	No in-service test frequency is provided. Test at CITY OF VANCOUVER's discretion. Inspection and function testing by user before every use.	No requirement in a Standard at this time. Recommend every 12 months depending on usage.
Insulated Hand Tools	No in-service testing. Inspection for certification and damage only.	There is no Standard. If insulated hand tools are damaged, discard them.
Conductive Boots	All live line tools must be tested at an interval not more than 6 months for tools in frequent use and not more than a year which are stored for a long period of time.	UFC Electrical Safety, O & M
Dielectric rated overshoes	All live line tools must be tested at an interval not more than 6 months for tools in frequent use and not more than a year which are stored for a long period of time.	UFC Electrical Safety, O & M

Table P-17 – Electrical Specific Tools & Equipment Frequency of Test Intervals

Electrical Specific PPE, Tools & Equipment	Frequency of Test Intervals	Governing Standard for Testing Requirements
Linemen's insulated handheld tools	An annual visual examination by suitable trained person. If any doubt persists after visual examination, a routine test shall apply.	ASTM F 1505
Insulated Ropes	Insulating rope is to be inspected at an interval not exceeding six months.	MSA-FP Pro Harness
Arial lift with bucket and derrick	Testing shall be set by the owner in accordance with the manufacturer's recommendations and *ANSI/SIA 92.2*, the intervals depend on component function and exposure to wear, deterioration and other agents which adversely affect component life. Service Providers will ensure that all elevated working platforms comply with *AS 1418 Part 10* and are tested at least once every six months. Where applicable, the insulating qualities of the upper boom, hydraulic circuit and detachable hydraulic hoses are to be tested at least once every six months. The basket and liner are to be tested at an electrical testing facility in accordance with *ANSI/SIAA92.2* at intervals not exceeding twelve months.	AS 1418 Part 10 ANSI/SIA 92.2

Note 1:

If the insulating equipment has been electrical tested but not issued for service, it shall not be put into service unless it has been tested within the previous twelve (12) months. Check applicable ASTM Standard to confirm requirements.

APPENDIX Q. SUMMARY OF OPTIONS FOR LIMITING ARC FLASH & SHOCK HAZARDS

The mitigation and risk reduction options listed should be reviewed and implemented based on a prioritized approach using the following *Hierarchy of Risk Control Methods*:

I. **Eliminate the hazard, de-energize is the first choice.**
II. Substitute with other materials, processes or equipment.
III. Reduce the risk by design (e.g. engineering solutions, equipment solutions, "*Safety by Design*").
IV. Implement appropriate *Electrical Equipment Maintenance* and at an acceptable frequency.
V. Use safer work systems that increase awareness of potential hazards (e.g. apply safeguards like signage, barriers, etc.).
VI. Implement *administrative controls* (e.g. *training and procedures*).
VII. Use *Electrical Specific Personal Protective Equipment (PPE), Tools & Equipment*, as a last line of defence, and ensure it is appropriately used and maintained.

Benefits:

1. Safety to all workers.
2. Improved reliability.
3. Eliminate damage to electrical power distribution equipment.
4. Lower and more effective management of costs related to *preventive and protective control measures* implemented for the electrical hazards of *arc flash and shock*.

The following is a list of potential opportunities to limit or mitigate *arc flash and shock hazards*.

12. **De-energize is the first choice!! *Establish an Electrically Safe Work Condition*.**
13. Implement a documented *Electrical Safety Program/Practice*.
14. Use TEST-BEFORE-TOUCH procedure.
15. Have an *Electrical Safety Audit* performed to review and validate electrical safety performance of any existing *preventive and protective control measures*.
16. Provide *electrical safety training* to electrical workers and non-electrical workers on a regular frequency. Use online eLearning (computer based training) to ensure every worker receives training and at an affordable price. See www.arcflash-training.ca for an *Electrical Safety Training System* eLearning solution.

17. Implement a *Qualified Electrical Worker (QEW) Electrical Safety Competency Validation Process*. Where there are gaps in competency provide additional training e.g. eLearning, on the job training or instructor led.
18. Create and implement the use of *Electrical Safe Work Procedures (ESWP)* for *energized electrical work tasks* that are justified. Use typical procedures for common tasks and create site specific for more complex tasks or for unique equipment (e.g. switching and isolation, power circuit breaker racking).
19. Implement an *Energized Electrical Work Permit (EEWP)* process requiring a signature of *Operations or Management approval*.
20. Ensure all electrical distribution and utilization equipment is "listed" or "approved" and installed to the minimum requirements of the applicable *jurisdictional "safe installation Standard."*
21. Perform an *Arc Flash Risk Assessment* for all applicable electrical equipment and affix a *detailed Arc Flash & Shock Warning equipment label*, including detailed information on the *Arc Flash Boundary*, *incident energy at assumed working distance*, *work task maximum voltage level, Shock Approach Boundaries*, and identify minimum *Electrical Specific PPE, Tools & Equipment*. Include the equipment tag, engineering firm's name that completed the study, calculation method used, and date that the data was calculated.
22. Worker must be *qualified and competent* for the task. Validate competency by *interview, testing and work task observations*.
23. Use *Engineering Specifications* to stipulate mandatory *Safety by Design* requirements for electrical engineering and electrical equipment. Prioritize based on cost and benefit and technical feasibility, existing power distribution systems compared to new power distribution system designs.
24. Design and install *redundant electrical power distribution systems*, A and B buses, load segregation, 100% redundancy.
25. Alter the *working distance from the energized equipment*, if possible. Use *hot sticks*. Extend length of *rack in/out tools*.
26. Use *remote racking tools* for power circuit breakers, adaptable to all manufacturers.
27. Use *remote low voltage MCC Bucket extractor tool*, adaptable to all manufacturers.
28. Do not reset a circuit breaker or replace a fuse until the cause of the electrical fault is known and rectified. Only a qualified electrical worker can reset the over current tripped breaker or replace the fuse.
29. Exercise good housekeeping upon completion of electrical work.

30. Specify view windows in electrical equipment to allow for visual checking of visible disconnect without having to open electrical equipment door(s).
31. Specify spare breakers in lighting panels, or load up the panel with standard breakers sizes when purchased new, thus eliminating the worker from attempting to install a breaker while the panel is energized.
32. Specify and install *High Resistance Grounding* to limit the phase to ground fault current.
33. Specify *high speed arc flash detection relay system* using light detection. *Arc flash relay*.
34. Install spare MCC motor starters in various typical sizes, Size 1, Size 2 and Size 3. This will eliminate the need to install starter buckets with an energized bus.
35. Under *normal operation* keep all electrical equipment doors closed and properly latched or bolted down. Cover up openings where components may have been removed for repair.
36. Carry out *electrical equipment maintenance* on critical electrical protection devices as per applicable manufacturer's recommendations, *CSA Z463 Guideline for Electrical Equipment Maintenance and or NFPA 70B Recommended Practice for Electrical Equipment Maintenance*.
37. Move unauthorized and unqualified workers outside of the *Arc Flash Boundary* and ensure they do not cross into the *Limited Approach Boundary for shock* without supervision and that they do not cross the *Restricted Approach Boundary for shock*.
38. Consider *overcurrent protection reliability, maintenance requirements* and understand the positive effects maintenance has on the *arc flash incident energy level*.
39. Designing electrical power systems using the best and most applicable *current limiting over current protective device* possible.
40. Improving existing fusible systems.
41. Specify Type 2 (no damage) protection for motor controllers.
42. Specify *finger safe* products and terminal covers.
43. Ensure *guarding* is used to cover any *exposed energized electrical conductors or circuit parts*. Install additional insulation for example to all exposed bus bars inside switchgear and MCCs.
44. Use Group Settings for protective relays. Normal and maintenance modes. "*Arc Reduction Maintenance Switch" (ARMS)*.
45. Do not use short time delay settings on circuit breakers, balance this off with managing *device coordination*.
46. Specify a main breaker on a service.
47. Specify high speed breakers (e.g. current limiting) with faster clearing times.

48. Use arc terminating grounding devices to speed up clearing times and limit *incident energy* to the fault.
49. Use high speed explosive fusing e.g. G&W.
50. Use disconnect switches on the line side of PTs.
51. Use SF6 switchgear.
52. Specify a main breaker on the secondary side of a lighting transformer.
53. Break up large loads into smaller circuits if possible. More transformers smaller in size lowers the *Maximum Short Circuit Current* and reduces the energy in an *arc flash*.
54. Specify zone selective interlocking to be used in your protection design.
55. Use "Smart" equipment.
56. Use arc resistant low (e.g. <750V) and high voltage (e.g. 2.4kV, 4.16V, 13.8kV, 25kV, 35kV) Switchgear and MCCs.
57. Proper interrupting ratings.
58. Use *infrared scanning windows and ultrasonic ports* on the back of switchgear and MCCs and on other electrical equipment so covers don't have to be removed energized.
59. Make all rear access panels hinged as a *standard specification*.
60. For existing bolted on covers where they have to be removed for IR scanning install handles on the sheet metal so that it can be removed easily and safely.
61. Increase the size of the MCC Building/Electrical Room allow a minimum of 2 metres or more in front and behind low and medium voltage switchgear where rack in/out of breakers is required and access to the back for application of *Temporary Protective Grounds*.
62. Remote switching of circuit breakers via control system, mimic panel or remote operator.
63. Retrofit in permanent simple motor drive systems for racking in/out breakers. Order new Power Circuit Breakers with integrated rack in/out motor drive systems.
64. Review application of new "*arc free*" low voltage MCCs.
65. Improve *lighting levels* in MCC rooms to ensure lighting is adequate for energized work where *Electrical Specific PPE (i.e. arc-rated faceshields or hoods)* may limit worker visibility.
66. Lighting fixture installation should consider ease of access for re-lamping. *Safety by Design*. As well retrofit in local simple in line disconnects that can be pulled apart under load.
67. Don't "box in" electrical equipment so there is only one egress point.
68. MCC buildings are not to be used as offices or for coffee breaks.

69. MCC buildings are not warehouses for storage of flammable materials.
70. Install ground ball studs to allow easier attachment of *Temporary Protective Grounding (TPG) cables* on applicable low and high voltage switchgear and MCCs. Install additional ground ball studs to allow the Qualified Electrical Worker to "park" the phase clamps before proceeding with installation to make it easier to install them with PPE on.
71. Use *procedures as tools*. Have Qualified Electrical Workers *develop procedures for authorized, justified energized electrical work tasks*. Prioritize development for *high risk energized electrical work tasks*.
72. Ensure *equipment labeling* is *as-built to Single Line Diagrams*, on MCC Building or Electrical Room layout drawings, and on the equipment itself. Ensure *electrical safe work/operating procedures* utilize the equipment or device tag and it is *as-built to the single line*.
73. Ensure *panel schedules* are as-built and legible.
74. Ensure all *electrical equipment disconnects* are properly labelled and the label matches the *Single Line Diagram (SLD)* or the *panel schedule*.
75. Uniquely *label* the MCC Building, Electrical Room, Substation etc. (e.g. BU-101, MCC #1, Substation #101, etc.).
76. Ensure *warning signs* are installed on the outside of all MCC Building or Electrical Room doors (e.g. Danger 480 Volts, Danger 25,000 Volts, etc. *Warning Access by Authorized Personnel Only, Danger High Voltage, Danger Overhead Power Lines, Danger Temporary Protective Grounds Installed* (this is a magnetic sign that is attached to the outside of the switchgear door) etc.) Ensure these signs are consistently applied.
77. Ensure *Single Line Diagrams (SLDs)* are posted in MCC/Electrical Rooms so they are easily accessible to workers for reference (e.g. to identify *emergency isolation device*, work location and voltage sources and isolation points, and *upstream protective device* from work location).
78. Use high or low speed bus differential bus differential protection.
79. Install *real time "predictive maintenance"* to appropriate electrical distribution and utilization equipment (e.g. partial discharge). Detect and eliminate a potential failure before it occurs.
80. Retrofit *arc resistant doors* to switchgear.
81. Use *through door racking* on switchgear.
82. Install door mounted voltage measure test points.
83. Install door mounted voltage indicating lights for low voltage equipment.

84. Install *high voltage LED indicating lights* to each phase of disconnect switch that can be viewed through a viewing window before the door is opened. These are used for risk reduction NOT for confirming an absence of voltage. An *approved voltage detector* must still be used for *absence of voltage* testing.

APPENDIX R. ELECTRICAL SAFETY PROGRAM ORIENTATION CHECKLIST

Form #: ESP-0006

Date:		**Location:**	
Name:		**Company:**	
Role:		**Staff or Contractor:**	

Instructions:

The Supervisor or designated Qualified Electrical Worker (QEW) shall provide this orientation to an existing or new electrical worker that will be performing work on [Company]'s property, by staff or contractor(s). The intent is to complete this review at least on an annual basis. If a *complex work task* is to be undertaken or new equipment is brought on site that the electrical worker may not be familiar with the orientation and training can be repeated on a more frequent basis.

The following has been reviewed with the electrical worker and required knowledge confirmed:

- ☐ Journeyman Electrician.
- ☐ Other Task Qualified Worker.
- ☐ Verification that *Site Workplace Health & Safety and Environmental Orientation* training has been completed including *lockout training*.
- ☐ Verification that the *Qualifications & Training requirements* outlined in *Appendix U Training & Qualifications Matrix* has been completed and specifically that *Arc Flash & Shock training* has been completed, classroom or e-Learning (e.g. verify the *Training Certificate*).
- ☐ Electrical safety concepts. (e.g. *Risk Assessment Procedure, Arc Flash Risk Assessment, Shock Risk Assessment, use of the Risk Register Table*, familiar with *Electrical Hazard Risk Assessment Matrix, Shock Approach Boundaries, Arc Flash Boundary, Arc Rating (ATPV or E_{BT}), Arc Flash PPE Category, Incident Energy at the assumed Working Distance, Electrical Specific PPE, Tools & Equipment, Electrical Work Zone*, read and understand *detailed Arc Flash & Shock equipment labels or Results Table*, properly use the *Arc Flash PPE Category Table Method*, etc.)

- ☐ Facility power distribution system.
  (e.g. configuration, voltage levels, *Single Line Diagrams,* etc.)
- ☐ *Appropriate knowledge, experience, and skills* to perform the assigned *work task*?
- ☐ Familiar with *your [Company]'s Electrical Safety Program (ESP)*?
- ☐ *Emergency Response requirements* reviewed including
  Approved Methods Of Release of a Shock Victim.
- ☐ *First aid and CPR training* completed as per *company requirements*?

Describe electrical equipment and *work task(s)* to be completed and limitations assigned:

Low Voltage (LV) (<750V Canada, <1000V USA):
High Voltage (HV) (>750V Canada, >1000V USA):
Task Qualified Worker (TQW) (<750V Canada, <1000V USA):

The Qualified Electrical Worker (QEW) has the following *Electrical Specific PPE, Tools & Equipment* available that may be required for *energized electrical work tasks*:

- ☐ Minimum 8 cal/cm^2 *arc flash clothing*
  c/w arc-rated balaclava and arc-rated faceshield.
- ☐ Minimum 65 cal/cm^2 *arc flash suit*
  (e.g. *bib coveralls, jacket* and *arc flash suit hood* with cooling fan and LED).
- ☐ *Shock Protection*
  (e.g. *ohm rated safety boots*, *Rubber Insulating Gloves with Leather Protectors, insulated hand tools, hot stick(s), rubber insulating blanket and Temporary Protective Grounds (TPGs)*).
- ☐ *Approved test instruments*
  (e.g. *Digital Multi-meter* and/or *High Voltage Proximity Detector*. Min. Cat III, 600V.)
- ☐ Other: _____

Company Authorized Signature:	
Electrical Worker Signature:	

Notes:

1. *This orientation should be reviewed on at least an annual basis. This orientation can be applied to a special work task to document qualifications. This orientation expires one year from the date indicated above.*
2. *All new Qualified Electrical Workers (QEW) and Associate Electrical Workers (AEW) on site must be oriented.*
3. *This checklist should be kept on file by the Supervisor or designated Qualified Electrical Worker (QEW) and available for Audit purposes.*
4. *This checklist can be sent to a contractor and the Manager or Supervisor complete this checklist for all workers that they will be providing that may perform energized electrical work tasks. This can be done before the project starts for construction or annually when maintenance support is provided by the contractor. Completed checklists are provided signed by both the QEW and Manager/Supervisor.*
5. *The International Electrical Testing Association (NETA) provides additional qualification and certification training for NETA Technicians that perform low and high voltage electrical equipment testing & maintenance.* See *http://www.netaworld.org/*.

APPENDIX S. OPERATIONAL READINESS FOR ENERGIZATION / RE-ENERGIZATION CHECKLIST

Form #: ESP0007

Table S-18 – Operational Readiness for Energization/Re-Energization Checklist

OPERATIONAL READINESS for ENERGIZATION/RE-ENERGIZATION CHECKLIST	
This Form is to be used by a Qualified Electrical Worker (QEW) and the Project Commissioning Representative to obtain Approval for Energization or Re-Energization of Electrical Systems related to Construction or Maintenance Work - Where required the Management of Change (MOC) Process should also be utilized.	
PROJECT:	**WO#**
LOCATION:	**EQUIPMENT/DEVICE:**
INSTALLER:	**COMPANY:**
QUALIFIED ELECTRICAL WORKER (QEW):	**DATE:**

General Items	COMPLETE YES / NO	QEW INITIALS:	PCR INITIALS:	Comments
1 - All electrical equipment and systems being energized are correctly installed and complete. e.g. jumpers and test leads removed, cables and bus terminations torqued correctly?				
2 - All electrical equipment is *CSA*, *ULc* approved and rated for the location in which it is installed?				
3 - System and equipment voltages verified to be correct?				
4 - All electrical components (wire, breaker, overloads etc.) are sized according to the *Canadian Electrical Code* or *NEC* requirements?				
5 - *Grounding and Bonding* is correct and complete?				
6 - All protective devices are properly rated and installed, programmed and tested?				
7 - All Protection and Co-ordination schemes have been approved by the *Engineering Department*?				
8 - *Engineering Incident Energy Analysis Studies* complete and *detailed Arc Flash & Shock Equipment Labels* in place or *Results Tables* available?				

Quality Assurance / Quality Control	COMPLETE YES / NO	QEW INITIALS:	PCR INITIALS:	Comments
1 - All electrical connections checked for correct termination and tightness?				
2 - All instrument loops have been wire checked / continuity checked?				
3 - *Megger and Hi-pot testing* is complete and acceptable e.g. Megger ungrounded conductors to ensure no shorts exist (phase to phase, phase to ground)?				
4 - All vendor representative commissioning checks and manufacturers recommended checks are complete?				
5 - Ensure that all applicable *quality control and assurance documentation* has been completed and a copy is entered into the project file.				
6 – All tools, construction materials, removed and equipment is clean and free of any debris?				
7 – Equipment covers are in place and all bolts installed or if hinged doors, doors closed and latched?				
Switching & Isolation	**COMPLETE YES / NO**	**QEW INITIALS:**	**PCR INITIALS:**	**Comments**
1. All branch circuit loads turned off, loads are isolated?				
2. All personnel are clear of equipment, *locks and tags* removed, *permits* released?				
3. All *Temporary Protective Grounds* or *Ground Truck & Test Devices* are removed and accounted?				
4. For outdoor substations all personnel are outside the fence, away from transformers or outside of electrical rooms during energization?				
5. If required approved *Electrical Specific PPE, Tools & Equipment* are being used for *work tasks* related to energization and/or re-energization?				

The Electrical equipment or system is complete and safe to energize: (Signature required)

Qualified Electrical Worker (QEW) _____

Project Commissioning Representative (if required) _____

PROJECT POST ENERGIZATION CHECKLIST			
System Phasing (if applicable)	System Phasing Checks Complete_____		
Voltage Verification	_____Volts A-B	_____Volts B-C	_____Volts C-A
	_____Volts A-G	_____Volts B-G	_____Volts C-G
Motor Checks	Rotation check_____	Amp Draw _____ A	Uncoupled Run / RTD Temperatures Stable_____

APPENDIX T. SAFE LIMITS OF APPROACH TO OVERHEAD POWER LINES FOR PERSONS AND EQUIPMENT

Table T-119 – BRITISH COLUMBIA Safe Limits of Approach Overhead Power Lines for Persons and Equipment

Operating voltage between conductors of overhead power line	Safe limit of approach distance for workers and equipment
Over 750V to 75kV	3.0 m
Over 75kV to 250kV	4.5 m
Over 250kV to 550kV	6.0 m

Please confirm all *Limits of Approach* with the *jurisdiction having authority*.

APPENDIX U. TRAINING AND QUALIFICATIONS MATRICES

Note: This appendix contains two training and qualifications matrices. The first section covers REFM and all other COV workers, the second covers only Engineering Services workers.

Section 1: REFM and other COV Training Matrix:

Acronyms and Definitions

M **Manager (Senior Manager or Director)**

S **Manager or Superintendent or Supervisor or Foreman**

E **Engineer**

QEW **Qualified Electrical Worker (Includes Low Voltage, High Voltage, and Field Safety Representative (FSR), but does not include Task Qualified Worker or Utility Arborist)**

TQW **Task Qualified Electrical Worker (Power Engineers (REFM and Parks Board); REFM Plumbers)**

UA **Utility Arborist**

QIW **Qualified Instrumentation Worker**

AEW **Associate Electrical Worker**

NEW **Non-Electrical Worker (Includes Qualified Operations Workers (QOW's), Inspections Branch; Theatre FE, LE, or LPEC; Parking Meter Maintenance Technicians).**

CW **Contract Workers**

X **Is Required**

R **Is Recommended**

Form #: ESP0008

ESP0008 – Training and Qualifications Matrix

Training and Qualifications X = Required R = Recommended	REFM and Other COV Role / Job Title [1]								
	M	S	QEW[7] (LV, HV, FSR)	TQW (Power Eng, Plumber)	UA	AEW[6]	QIW	NEW (QOW, Insp, Theatre Parking Meter)	CW[5]
Is a Journeyman Electrician, P.Eng. Electrical Engineer, Certified Electrical Technologist (CET) or other Task Qualified Trade designation.		**X**	**X**	**X**		**R [4]**	**X**		**X**
Has a comprehensive knowledge of the construction, operation, installation of the electrical equipment and maintenance work tasks and the associated safety implications.		**X**	**X**	**X**	**X**				**X**
Has an understanding of and is familiar with the work to be done and the associated safety implications but may not have formal training.						**X**			

Training and Qualifications X = Required R = Recommended	REFM and Other COV Role / Job Title [1]								
	M	S	QEW[7] (LV, HV, FSR)	TQW (Power Eng, Plumber)	UA	AEW[6]	QIW	NEW (QOW, Insp, Theatre Parking Meter)	CW[5]
Has received TSBC Field Safety Representative Training and Certification, A (no voltage limit, unlimited current), or B (750V or less, unlimited current).		**X**[12]	**X**[12]						**X**[12]
Has received approved Utility Arborist qualification training.					**X**[8]				
Has received TSBC Field Safety Representative Training and Certification, A (no voltage limit, unlimited current), or B (750V or less, unlimited current).		**X**[9]	**X**[9]						**X**[9]
Has received *CE Code Part 1 Update Training*.		**X**	**X**	**X**		**X**			**X**
Can perform *Job Safety Planning*, can identify electrical hazards to an assigned energized *work task*, assess the associated risk and can select the		**X**	**X**	**X**	**X**	**X**	**X**		**X**

Training and Qualifications X = Required R = Recommended	REFM and Other COV Role / Job Title [1]								
	M	S	QEW[7] (LV, HV, FSR)	TQW (Power Eng, Plumber)	UA	AEW[6]	QIW	NEW (QOW, Insp, Theatre Parking Meter)	CW[5]
appropriate risk controls methods from the *Hierarchy of Risk Control Methods*.									
Can determine the *nominal voltage of exposed energized electrical conductors and circuit parts*.		**X**	**X**	**X**	**X**	**X**	**X**		**X**
Has received *ESP Roll Out Training* and is familiar with the *City of Vancouver's ESP* requirements.[2]		**X**	**X**	**X**	**X**	**X**	**X**		
Has received *Electrical Safety Awareness Training pertinent/relative to the tasks they perform*.[3]	**X**	**X**	**X**	**X**	**X**	**X**	**X**	**X**	**X**
Can complete *Electrical Hazard Risk Assessments, both Arc Flash & Shock Risk Assessment* for an *energized electrical work task* to identify *additional protective*		**X**	**X**	**X**		**X**	**X**		**X**

Training and Qualifications X = Required R = Recommended	REFM and Other COV Role / Job Title [1]								
	M	S	QEW[7] (LV, HV, FSR)	TQW (Power Eng, Plumber)	UA	AEW[6]	QIW	NEW (QOW, Insp, Theatre Parking Meter)	CW[5]
measures and establish and use the *Shock Approach Boundaries* and the *Arc Flash Boundary*.									
Is experienced in the selection, and application of *Electrical Specific PPE, Tools & Equipment*.		X	X	X	X	X	X		X
Trained on *proper use, care, and maintenance* of *Electrical Specific PPE, Tools & Equipment*.		X	X	X	X	X	X		X
Trained to select an *appropriate test instrument (e.g. voltage detector)* and can demonstrate how to use it to test for the *absence of voltage*.		X	X	X	X	X	X		X
Is trained in and is familiar with *City of Vancouver's safety programs, permitting*	X	X	X	X	X	X	X	X	X

Training and Qualifications X = Required R = Recommended	REFM and Other COV Role / Job Title [1]								
	M	S	QEW[7] (LV, HV, FSR)	TQW (Power Eng, Plumber)	UA	AEW[6]	QIW	NEW (QOW, Insp, Theatre Parking Meter)	CW[5]
and lock-out/tag-out procedures.									
Knows where and how to safely de-energize or switch off an electrical circuit or equipment if there is a sign of a *worker in distress*.		**X**	**X**	**X**		**X**	**X**	**(X – QOW)**	**X**
Has received *HS&E for Contractors Orientation Training/Instruction*.									**X**
Has received *Electrical Emergency Response & First Aid Training*.		**X**	**X**	**X**	**X**	**X**	**X**		**X**

Notes:

(1) See Electrical Safety Program Section 3.0 for details of specific Roles and Responsibilities.

(2) Detailed training will include content on Provincial & Municipal Acts, Codes and Regulations as applicable, CSA Z462 content and requirements, Identification of Electrical Hazards, Risk Assessment Procedure, Arc Flash & Shock Risk Assessment, Hierarchy of Risk Control Methods, and specific content on Electrical Specific PPE, Tools & Equipment.

(3) Electrical Safety Awareness Training will include basic understanding of the electrical hazards of shock and arc flash, and precautions to be taken when working near energized electrical equipment (e.g. CSA Z462) and/or operating electrical equipment.

(4) Could be an Electrical Apprentice, Electrical Engineer, Technologist or Apprentice Instrumentation Technician or other trade in training.

(5) Contract Workers include all non-company personnel that are required to perform electrical work at City of Vancouver facilities, including manufacturer's technicians, and electrical testing and commissioning personnel.

(6) AEW scope of work is limited.

(7) If an AED is available then training on the proper use of the AED should be provided. Frequency of training and who is to be trained will be based on City of Vancouver requirements.

(8) Qualification training as a Utility Arborist and knowledge and application of applicable WorkSafeBC Limits of Approach and applicable BC Hydro policies, practices and procedures. Trained in BC Hydro PSSP Categories 2, 3,and 4; Distribution Component Training (DBC); and Transmission Component Training (TXC).

(9) Designated Field Safety Representative only. Reference TSBC website for Field Safety Representative, https://www.technicalsafetybc.ca/certification/electrical/electrical-fsr.

Section 2: Engineering Services Training Matrix:

Acronyms and Definitions

M **Branch Manager**

S **Superintendent and Supervisor**

QEW **Qualified Electrical Worker (other than TQW)**

AEW **Associate Electrical Worker (helpers, apprentices)**

- **TQW** **Task Qualified Worker (SCADA; Dedicated Fire Protection System (DFPS) Electrician; Parking Meter Maintenance (PO) Mechanics, Equipment Services (EQS) Mechanics)**
- **QOW** **Qualified Operations Worker (Sewer Operations (SO) Mechanics, Waterworks Operations (WO) Mechanics, Other DFPS workers)**

NEW **Non-Electrical Worker (such as Operations Workers)**

CW **Contract Workers**

X **Is Required**

R **Is Recommended**

Form #: ESP0008

ESP0008 – Engineering Training and Qualifications Matrix

Training and Qualifications X = Required R = Recommended	Engineering Services Role / Job Title (1)								
	M	S	QEW (other than TQW)	AEW(6)	TQW (DFPS Electrician)	TQW (SCADA, PO, EQS Mechanic)	QOW (SO, WO, DFPS Mechanic, other DFPS workers)	NEW	CW(5)
Is a Journeyman Electrician, P.Eng. Electrical Engineer, Certified Electrical Technologist (CET) or other Task Qualified Trade designation.	**X**	**X**	**X**	**R (4)**					**X**
Has a comprehensive knowledge of the construction, operation, installation of the electrical equipment and maintenance work tasks and the associated safety implications.	**X**	**X**	**X**						**X**
Has an understanding of and is familiar with the electrical work to be done and the associated safety implications but may not have formal training.				**X**					
Has received TSBC Field Safety Representative Training and Certification, A (no voltage limit, unlimited current), or B (750V or less, unlimited current).		**X(7)**	**X(7)**						**X(7)**
Has received *CE Code Part 1 Update Training*.		**X**	**X**	**X**					**X**
Can perform *Job Safety Planning*, can identify electrical hazards to an assigned energized *work task*, assess the associated risk and can select the appropriate risk controls methods from the *Hierarchy of Risk Control Methods*.		**X**	**X**						**X**

Training and Qualifications X = Required R = Recommended	Engineering Services Role / Job Title [1]								
	M	S	QEW (other than TQW)	AEW[6]	TQW (DFPS Electrician)	TQW (SCADA, PO, EQS Mechanic)	QOW (SO, WO, DFPS Mechanic, other DFPS workers)	NEW	CW[5]
Can determine the *nominal voltage of exposed energized electrical conductors and circuit parts*.		**X**	**X**	**X**	**X**				**X**
Has received COV *ESP Roll Out Training* and *CSA Z462 Training*..[2]		**X**	**X**	**X**	**X**				
Has received *Electrical Safety Awareness Training pertinent/relative to the tasks they perform*.[3] *(For some job titles, it may be covered under ESP Roll Out Training* and *CSA Z462 Training).*		**X**	**X**	**X**	**X**	**X**	**X**	**X**	**X**
Can complete *Electrical Hazard Risk Assessments, both Arc Flash & Shock Risk Assessment* for an *energized electrical work task* to identify *additional protective measures* and establish and use the *Shock Approach Boundaries* and the *Arc Flash Boundary*.		**X**	**X**	**X**					**X**
Is experienced in the selection, and application of *Electrical Specific PPE, Tools & Equipment*.		**X**	**X**	**X**					**X**
Trained on *proper use, care, and maintenance* of *Electrical Specific PPE, Tools & Equipment*.		**X**	**X**	**X**					**X**
Trained to select an *appropriate test instrument (e.g. voltage detector)* and can demonstrate how to use it to test for the *absence of voltage*.		**X**	**X**	**X**					**X**

Training and Qualifications X = Required R = Recommended	Engineering Services Role / Job Title (1)								
	M	S	QEW (other than TQW)	AEW(6)	TQW (DFPS Electrician)	TQW (SCADA, PO, EQS Mechanic)	QOW (SO, WO, DFPS Mechanic, other DFPS workers)	NEW	CW(5)
Is trained in and is familiar with *City of Vancouver's safety programs, permitting and lock-out/tag-out procedures*.		**X**	**X**	**X**					**X**
Knows where and how to safely de-energize or switch off an electrical circuit or equipment if there is a sign of a *worker in distress*.		**X**	**X**	**X**					**X**
Has received *HS&E for Contractors Orientation Training/Instruction*.									**X**
Has received *Electrical Emergency Response & First Aid Training*.		**X (8)**	**X**	**X**					**X**

Notes:

(1) *See Electrical Safety Program Section 3.0 for details of specific Roles and Responsibilities.*

(2) *Detailed training will include content on Provincial & Municipal Acts, Codes and Regulations as applicable, CSA Z462 content and requirements, Identification of Electrical Hazards, Risk Assessment Procedure, Arc Flash & Shock Risk Assessment, Hierarchy of Risk Control Methods, and specific content on Electrical Specific PPE, Tools & Equipment.*

(3) *Electrical Safety Awareness Training will include basic understanding of the electrical hazards of shock and arc flash, and precautions to be taken when working near energized electrical equipment and/or operating electrical equipment.*

(4) *Could be an Electrical Apprentice, Electrical Engineer, Technologist or Apprentice Instrumentation Technician or other trade in training.*

(5) *Contract Workers include all non-company personnel that are required to perform electrical work at City of Vancouver facilities, including manufacturer's technicians, and electrical testing and commissioning personnel.*

(6) *AEW scope of work is limited.*

(7) *Designated Field Safety Representative only. Reference TSBC website for Field Safety Representative, https://www.technicalsafetybc.ca/certification/electrical/electrical-fsr.*

(8) *Supervisors only.*

APPENDIX V. ELECTRICAL INCIDENT RESCUE PROCEDURE & INVESTIGATION FORM

In the event that a person has received an *electric shock* and is still in contact or you believe may still be in proximity to *energized electrical equipment* DO NOT TOUCH the person and possibly become a second victim. If you are *authorized* to complete an *electrical incident rescue* you must use *approved rescue methods*. Additionally, if a worker has been exposed to an *arc flash event*, follow these procedures:

- Evacuate away from the area where the electrical incident occurred, assess the situation and ensure there are no continuing hazards to yourself or others.
- Sound the alarm, alert other personnel.
- Call for help, notify the Supervisor and call for immediate medical help (e.g. EMS, Fire Department, or Police. Call 911).
- Assess the hazards don't rush in to initiate rescue. Only complete an *electrical incident rescue* if you are *authorized and competent* to complete the rescue safely.
- Secure the area, treat all electrical equipment as energized. If possible turn off the electrical power supply if you are authorized to (e.g. for High Voltage power distribution equipment >750V you may not be authorized and/or competent to operate the isolation device), *isolate and lock out* the electrical source following *established electrical safe work procedures*. If you cannot turn the power off then assess if you can safely rescue using a *hot stick*? If a *hot stick* is not available, are *rubber insulating gloves* available?
- Initiate rescue, when it is confirmed safe to do so, rescue the victim.
- When the victim has been removed to a safe area begin *first aid* if properly trained. If the person is unconscious or breathing is erratic monitor closely. If breathing stops apply *artificial respiration* immediately.
- Don't leave the victim unattended.
- If burned do not touch the victim's affected area or apply any lotions or gauzes.
- Confirm *emergency services* have been dispatched.
- Follow up, ensure *government/regulatory agencies* have been notified as required.
- Complete an *incident report*.

Electrical Incident Investigation Form

This form can be used as a tool to capture the details of *electrical incidents* or non-injury incidents ("near-misses") that have resulted or could have resulted in a work-related injury and help to prevent similar incidents from occurring.

This information can be used to identify underlying causes and contributory factors, then recommend solutions that address these causes and factors. The recommended corrective actions may be included in your *organization's corrective/preventive action process* or included in the *Incident Investigation Form*.

Form #: ESP0009

Dear Doctor:

The information provided in this package is intended to assist you in the evaluation, diagnosis and treatment of individuals who may have been involved in an *electrical shock or arc flash*.

As you are aware, electric current can cause damage when it passes through the human body. Potential impacts include burning tissue, cellular membrane changes and/or interference with the function of internal organs.

Electrical incidents may also involve an *arcing fault and an arc flash*. In this scenario, there may be multiple traumas to the body in the form of thermal burns to the surface of the body, deep tissue damage, percussion/blast damage or injury from flying molten metal. Other injuries could include: damage to hearing, eye damage as well as lung/respiratory track damage if toxic gasses (e.g. vaporized copper) and other byproducts of the arc flash are inhaled.

Medical Management of Electrical Injuries may include:

1. Assess and treat associated injuries
   - Cardiac, renal, eye and internal organs depending on the path of the current
   - Neurologic and central nervous system injuries (i.e., seizures and loss of consciousness, etc.)
   - Thermal wounds (entry and exit wounds)
   - Muscle damage and tenderness
   - Compartment syndrome assessment
2. Baseline investigations depend on the path of the current (i.e. head to foot, hand to hand, hand to opposite foot, foot to foot, etc.)
   - CBC, electrolytes, creatine, blood CPK, etc.
   - Urine myoglobin (serum myoglobin if urine is positive)
   - ECG
   - X-rays (as indicated)
3. Tetanus prophylaxis (as indicated)
4. Analgesic (as indicated)
5. Consultation in cases with increased current, duration, or lowered resistance

Note: There is usually more tissue injury than is first apparent

Attached are information sheets and an *incident detail form* developed specifically for *electrical shock and arc flash scenarios*. Where possible, the injured worker or his co-workers will provide you with information that may help to determine the potential severity and complexity of the injury. Be aware that the extent of the victim's injuries may be worse than is first clinically apparent.

Finally, as a concerned employer who recognizes the potential serious nature of the injuries that may result, as well as the relative infrequency of treating this type of injury, please contact a member of your company's health team should you require any further information.

Table V-20 – Electrical Incident Investigation Form

Supervisor of Co-worker: *Please provide the following information and give to the emergency department attending physician*.	
Victim Name:	**Time of incident**: AM PM
What was the victim doing?	
What type of electrical injury was involved: ☐ Shock, direct electrical contact or proximity; ☐ Arc flash; ☐ Arc Blast; ☐ Other:	
Estimated duration of direct electrical contact: seconds	
Voltage details: ☐ AC; ☐ DC; Voltage level: ☐ volts ☐ kilovolts	
Electrical Current details: Amperes	
What was the main pathway through the body? ☐ Hand to hand; ☐ Hand to opposite foot; ☐ Head to foot ☐ Foot to foot ☐ Other:	
Conditions at point of contact: ☐ Wet skin; ☐ Dry skin; ☐ Contact with water; ☐ Non-intact skin; ☐ Humidity of air ☐ Other:	
Level of consciousness: ☐ Fully alert; ☐ Dazed / confused; ☐ Lost consciousness; Duration: _____ mins	
Did victim require: ☐ CPR; ☐ Defibrillation; ☐ No resuscitation	
Did the victim fall from height? ☐ Yes; ☐ No If yes, explain:	

Was victim immobilized? ☐ Neck collar; ☐ Joints / bones splinted
Was victim wearing Personal Protective Equipment (PPE)? ☐ Yes; ☐ No ☐ Arc-rated PPE; ☐ Leather Gloves; ☐ Rubber Insulating Gloves; ☐ Ohm rated Footwear; ☐ Hard hat; ☐ Safety glasses ☐ Other test instruments, tools:
Did the incident take place in an enclosed/confined space? ☐ Yes; ☐ No If yes, please explain:
Any other hazards in vicinity of electrical contact impacting on injury? ☐ Yes; ☐ No; If yes provide details:
Contact for further information: Name: Phone:

Factors Affecting Potential Injury

1. Amount of current flowing through the body.
2. The main pathway of electrical current through the body (see diagram below).
3. The duration of the current flow.
4. Current type - Alternating Current (AC) or Direct Current (DC).
5. The condition of the body at the point of electrical contact (depends in humidity, sweating, water contact, non-intact skin on contact point, PPE worn, etc.).
6. Arcing fault injury – where the individual is exposed to the arcing fault current between 2 objects (associated with severe blunt trauma). Temperatures may exceed 20,000 ºC).
7. Arc flash injury – no contact with electricity but exposure to thermal radiation, UV/IR, sound wave, molten metal projectiles and arc flash blast pressure.

Biological Effects of Electricity

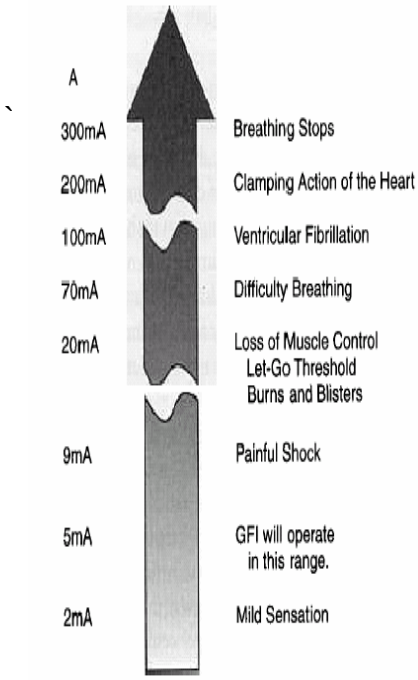

Some Basic Facts:

- AC 110 to 220 volts (household current) travelling across the chest for less than one second is capable of inducing ventricular fibrillation at currents from 27 – 100 milli amperes [*IEC IEC 60479-1: 2005-07*].
- AC produces involuntary spasms in muscles; however, DC currents do not have the same effect.
- The maximum "let go" current is 15 mA (milli amperes) AC and 75 mA DC.
- Burns are most frequent type of injury with electricity: Electrical shock, arc flash/blast and thermal contact.

If one of more of the following conditions are met, then prompt review by a Physician is also required for all voltages:

- Skin is not intact (i.e. an open wound) at point of contact.
- Skin is wet from sweat or humidity.
- Duration of contact is prolonged.
- Possibility that current passed through the heart or head.
- Employee has implanted medical device (includes but not limited to pacemaker, implantable defibrillator etc.).
- Employee has serious chronic medical condition which may increase the risk of injury/illness from electrical contact.
- Contact has caused burns/injuries.

Less than 1 ampere can kill!

Note: *General circuits for households are 15 amperes.*

Main Pathways Through the Body

Typical electric current pathways that stop normal pumping of the heart

Hand to Hand | Hand to Opposite Foot | Head to Foot

Electrically resistant Personal Protective Equipment such as *electrically rated footwear* and *Rubber Insulating Gloves* reduces the risk of injury or death.

APPENDIX W. ELECTRICAL SAFETY PROGRAM AUDIT

Form #: ESP0010

The following sets of *audit questions* can be used to validate and verify that the *Electrical Safety Program (ESP)* is understood and being properly applied. Any non-compliant issues will be identified and prioritized as corrective actions to ensure that the *ESP* is being properly and consistently applied. The audit questions are organized into sets of questions based on the hierarchy of controls (e.g. prioritized *preventive and protective control measures*) that the *Electrical Safety Program* outlines to be applied to reduce risk. Additional questions are provided to confirm the administrative requirements of the *Electrical Safety Program* are functioning as intended.

The *hierarchy of risk control methods* are:

1. De-energize is always the first choice;
2. *Substitution*;
3. Engineering and Equipment "*Safety by Design*." Maintain Critical Electrical Equipment;
4. Increase awareness by the application of *warning signs* and the use of *barriers*;
5. Administrative controls, *training* and *procedures*;
6. *Electrical Specific PPE, Tools & Equipment*, as the last line of defence, and ensure it is appropriately cared for, used and maintained.

Audit performed by: _____ **Date of audit: _____**

The following table identifies items that should be examined during the *Internal Electrical Safety Audit (IESA)*. Validation and verification can be completed by interviews/discussions with the responsible Qualified Electrical Worker(s) or other Worker Roles, retrieving documentation as evidence, walkthrough inspection(s) of electrical power distribution equipment, inspecting all available *Electrical Specific PPE, Tools & Equipment*, and observations of *energized electrical work tasks* if available. Auditing the items listed will provide an indication of the effective implementation of the *Electrical Safety Program* and related documentation such as supporting *policies, practices*, *safe operating procedures*, *electrical safe work procedures*, related *Canadian Electrical Code (CEC) Part 1* compliance and the application of any other recognized industry best practices. *CSA Z462 Workplace electrical safety Standard* is the primary reference Standards for electrical safety.

The following *Electrical Safety Audit Process* should be followed:

1. The *Internal Electrical Safety Audit* should be assigned as a *Work Order* to be executed by the *Electrical Maintenance department*. If an Electrical Engineer is available in a supporting role they may also be involved as an *audit team member*. The *Safety Department* may want to participate directly.
2. Schedule when you will complete the *Audit*, and advise management and workers that it will be completed and that they may have to participate in an interview or in verification/validation of the audit questions. Advise the *Safety Department* of the schedule for the *Audit*.
3. The *Internal Electrical Safety Audit* will also validate that applicable requirements of the overall *Occupational Health & Safety Management System (OHSMS)* are in place, and being followed with respect to *energized electrical work*. Relevant content from the overall *OHSMS* that should be applied against electrical hazard management may be a *Safe Work Permit*, overall *Hazard Identification process* with *FLHA/FLRA, LOTO Program/Policy*, *Risk Assessment process*, *Preventive and Protective Control Measures* (e.g. specific information on *Electrical Specific PPE, Tools & Equipment*), *Incident Reporting & Investigation*, *Emergency Response*, *Management of Change (MOC)*, *Contractor Management*, etc.. A formal or informal *Work Order* management system may also be used.
4. Retrieve the latest revisions of the *Electrical Safety Program*, and supporting *policies*, *practices*, *safe operating procedures*, *forms*, *checklists*, and *electrical safe work procedures*.
5. Retrieve and confirm that you have the latest Revision of facility *Electrical Single Line Diagram(s) (SLDs)* and they are as-built.
6. Execute the *Internal Electrical Safety Audit* by completing the questions in the *Table* below.
7. Create a simple *Internal Electrical Safety Audit Report* to document findings. Corrective actions are to be reviewed and prioritized.

Use of the Audit Questions:

This list of questions provides a broad review of the requirements of the *Electrical Safety Program (ESP)*. The questions should be reviewed for validation while completing interviews/discussions, while completing the walkthrough inspection(s) of the electrical power distribution system(s) and when you have retrieved relevant documents. You will also have to inspect all available *Electrical Specific PPE, Tools and Equipment* (e.g. inventory available for use, stored properly, issued individually or shared, *check in/out system*, if any items are shared, inspected for proper laundering, general condition as found (e.g. not torn, contaminated), and valid third party test date (e.g. *rubber insulating gloves* within the last 6 months, *hot sticks* within the last 24 months and *temporary protective grounds* within the last 36 months).

When completing inspections, interviews/discussions, or reviewing documents or inspecting *Electrical Specific PPE, Tools & Equipment* the criteria against which you are reviewing the findings can be identified by:

Table W-21 – Comments/Observation Verification/Validation Criteria

Item	Description
R	*Regulations*, *OH&S, Mines Act.*
C	*Codes*, *CEC*
S	*Standards*, *CSA Z462*, Other
M	Overall *Occupational Health & Safety Management System* Requirements (e.g. *CSA Z1000, COR* etc.)
E	*Electrical Safety Program*
B	Best Practice
O	Other

You can use the criteria "letter" when recording results in the Comments/Observation column of the *Audit Findings Table*. The "*Requirements and References*" column of the Table includes specific requirements related to the criteria in *Table W-1*.

Generally as the auditor you are looking for the acceptable application of the prioritized list of *preventive and protective control measures* with an electrical hazard focus that are included in the *Electrical Safety Program*:

1. *Eliminate the hazard*, de-energize is the first choice (e.g. application of *LOTO program* locks and tags available and applied, lock removal form and process in place, *Establishing an Electrically Safe Work Condition*);
2. *Substitution* (e.g. use of NGRs, *Arc Resistant Switchgear*, Low Voltage MCC "*Arc Free*" designs, etc.)
3. Reduce the risk by design (e.g. Engineering solutions, equipment solutions, "*Safety by Design*," *Arc Flash Incident Energy Analysis Studies* with mitigation: circuit breaker & relay changes to reduce incident energy, *incident energy reduction* with *Maintenance Mode Switches*, *incident energy reduction* with *Arc Flash Relays*, *IR scanning windows* installed for use, *Ultrasonic ports* installed for use, etc.);
4. Electrical equipment maintenance (e.g. *Electrical Equipment Maintenance Program* in place, appropriate strategies used, scheduling in place, PD, PMs, RTF and RCM);
5. Use safer work systems that increase awareness of potential hazards (e.g. apply safeguards like signage, barriers, etc. The *Electrical Work Zone* is being used with red "*Danger*" tape and a tag or other barricading, proper use of *Shock Approach Boundaries* and *Arc Flash Boundary*);
6. Implement administrative controls, *training* and *procedures* (e.g. review training records, use of *Energized Electrical Work Permits*, use of *Energized Electrical Job Risk Assessment (EEJRA)* form, audit status of *Electrical Safe Work Procedures (ESWP) / Standard Operating Procedures (SOP)*, etc.); and
7. Use of *Electrical Specific Personal Protective Equipment (PPE), Tools & Equipment*, as a last line of defense, and ensure it is appropriately used and maintained (e.g. available inventory, stored properly, shared check in/out system working, check condition, laundered properly, tested current, etc.).

Please also note that the *Auditor* can add to this list of questions or modify the way the question is asked in an effort to extract the verification/validation data required to make a credible assessment of the status quo.

***Note**: Please review Appendix Q of the Electrical Safety Program for a Summary of Options for Mitigating or Limiting Arc Flash & Shock Hazards.*

Table W-22 – Audit Findings Table

Item No.	Audit Questions	Requirements and Reference	Compliant		Comments or Observation
			Yes	No	
General					
1.	CITY OF VANCOUVER Overall *Occupational Health & Safety Management System* in place and active? Where is it located?	OH&S			
2.	Overall corporate "*Risk Assessment Procedure*" in place and a "*Risk Assessment Matrix*" is available and applied?	OHSMS			
3.	CITY OF VANCOUVER *Electrical Safety Program* available? Where is it located?	CSA Z462, Clause 4.1.5			
4.	Has the *Electrical Safety Program* been reviewed and implemented based on the *Electrical Safety Program Appendix B "Work Flow Process" flow chart*?	ESP			
5.	Have workers received training on the *Electrical Safety Program* and its requirements?	CSA Z462, Clause 4.1.5			
6.	Have electrical workers been identified as Qualified Electrical Workers Low Voltage, High Voltage or Task Qualified using the *Appendix R Electrical Safety Program Orientation Checklist* as a simple method to document qualifications and competency with the worker. Confirm *Appendix R forms* are filled out, signed and filed.	ESP Appendix R			
7.	Has the *Electrical Safety Program Power Line Encroachment Authorization Permit (PLEAP)* been used?	ESP			
8.	Has the *Electrical Safety Program Temporary Power Certificate (TPC)* been used and renewed after the 12 month expiry with re-inspection and sign off?	ESP			
9.	Has any electrical hazard and *Electrical Safety Program* practice information been posted on *Safety Bulletin Boards* in order to get the profile higher in the general worker community?	CSA Z462, Clause 4.1.5			
10.	Has any communication gone out to the general worker community and appropriate contracting companies with respect to awareness of encroachment (*Limits of Approach*) for *Overhead Power Lines* and the risk of shock and electrocution?	OH&S			
11.	Has any communication been sent out to the general worker community on the importance of using a	CSA Z462, Clause 4.1.8			

Item No.	Audit Questions	Requirements and Reference	Compliant		Comments or Observation
			Yes	No	
	Ground Fault Circuit Interrupter (GFCI) and pre-use test and reset requirements?				
12.	Has any communication been sent out to the general worker community on the importance of pre-use inspecting *power cords and plugs* to ensure no damage?	CSA Z462, Clause 4.1.9			
13.	CITY OF VANCOUVER requires that a *Risk Assessment /Job Hazard Analysis* be done for all work tasks completed?	OH&S			
14.	CITY OF VANCOUVER requires general *Job Planning & Briefing* be completed by all workers before proceeding to complete a work task? Tail board meetings used?	CSA Z462, Clause 4.1.5.8			
15.	Is a *Joint Health & Safety Committee (JHSC)* in place are QEWs represented? General safety meeting held monthly?	CSA Z1000, Clause 4.2.3, OH&S, ANSI Z10			
16.	Is an *Electrical Safety Steering Committee (ESSC)* in place as a sub-committee of the *JHSC*? Does the *ESSC* meet at least annually to review the *Electrical Safety Program*?	CSA Z1000, Clause 4.2.3, ESP			
17.	With respect to the *Roles & Responsibilities of the Electrical Safety Program*, is an *Electrical Safety Program Manager* in place and active?	ESP			
18.	If the CITY OF VANCOUVER has multiple divisions or business units is there an established *Electrical Safety Program Coordinator* in place for each division of business unit?	ESP			
19.	CITY OF VANCOUVER *Emergency Response Plan (ERP)* in place and active?	OH&S			
20.	CITY OF VANCOUVER *Incident Reporting and Investigation Policy* in effect and active?	OH&S			
21.	Have all workers been advised that ALL *electrical shocks* (no matter what the voltage of exposure was) and *arc flash events* are to be reported?	ESP			
22.	Have any *electrical incidents* occurred since the last *Electrical Safety Audit* was completed?	ESP			
23.	Is the *Electrical Safety Program Appendix V Electrical Incident Rescue Procedure & Investigation Form* used for electrical incidents investigation and reporting?	ESP			
24.	Are Class “C” fire extinguishers are located in SWGR and MCC buildings and tested current?	OH&S			

Item No.	Audit Questions	Requirements and Reference	Compliant		Comments or Observation
			Yes	No	
25.	First aid kits are available? Where are they located? Are AEDs available and where are they located?	OH&S			
26.	Are there written *procedures* for care, use, maintenance, testing and pre-use inspection for *Electrical Specific PPE, Tools & Equipment*?	OH&S			
27.	*Management of Change (MOC)* Form has been used for items identified in the *Electrical Safety Program* e.g. *engineering incident energy analysis studies*, changing *detailed Arc Flash & Shock equipment labels*, *single line diagrams*, *protective device settings*, *procedures*, etc.). *Appendix Z Management of Change Request forms* are filled out, signed and filed.	OH&S, ESP			

General Comments:

Item No.	Audit Questions	Requirements and Reference	Compliant		Comments or Observation
			Yes	No	
De-energizing – Control of Hazardous Energy					
28.	CITY OF VANCOUVER *Lockout and Tagout Program/Policy* is in place and current?	OH&S			
29.	As a priority *energized electrical equipment* is de-energized before any work is completed on it e.g. repair or alteration?	ESP, CEC Part 1, Rule 2.-304			
30.	The concept of "*Establishing an Electrically Safe Work Condition*" is practiced before any repair or alteration work on *energized electrical equipment*?	ESP, CSA Z462, Clause 4.2			
31.	If *energized electrical work* is justified is a *Risk Assessment Procedure* completed before proceeding with the *energized electrical work*?	ESP, CSA Z462, Clause 4.3.3			
32.	The *Risk Assessment Procedure*" and related process is utilized before undertaking energized electrical work to consider any mitigation or control measures that can be applied to reduce the risk related to the work task to *As Low As Reasonably Practicable (ALARP)*? Risk assessed as Low, Medium or High and appropriate follow up?	ESP, CSA Z462 Annex F			*CSA Z462 Annex F* provides a comprehensive review of risk assessment. The *Electrical Safety Program Appendix E* provides detailed supporting information and a requirement to document the *risk assessment*, evaluating Frequency of Exposure (Fr), Probability of the Hazardous Event (Pr), and the ability of to Avoid exposure (Av).
33.	Electrical *Single Line Diagrams* both low voltage (<1000V) and high voltage (>1000V) are available to workers to be used for job planning and identifying electrical isolation locations related to a work task?	For high voltage, CEC Part 1, Rule 36-006			
34.	Workers are trained on the requirements of the *CITY OF VANCOUVER Lockout and Tagout Program/Policy*?	OH&S			
35.	Personal locks and tags are available to all workers?	OH&S			
36.	Appropriate adapters to attach locks are available for electrical isolation devices?	OH&S			
37.	*Locks and tags* are installed on *electrical isolation devices* by individual workers?	OH&S			
38.	*Group lockout* is used when required for electrical isolations?	OH&S			
39.	Are locks readily available and controlled? Are lock out boards available in MCC / Electrical Rooms?	OH&S			

Item No.	Audit Questions	Requirements and Reference	Compliant		Comments or Observation
			Yes	No	
40.	A *Lockout Logbook* is located in the MCC / Electrical Room and locks logged on and off?	OH&S			
41.	All conductors and circuit parts are tested for absence of voltage (e.g. zero, “0”) before they are touched with bare hands? TEST-BEFORE-TOUCH!	ESP, CSA Z462, 4.2			
42.	Where cables or capacitors were energized are they discharged to ground before being worked on? Long runs of wiring will act as a capacitors and should be discharged to ground to eliminate any residual voltage.	ESP, CSA Z462, 4.2			
43.	No locks are removed (e.g. cut off) unless all means of contacting the owner of the lock have been undertaken and documented and a *lock removal form* has been signed by management?	OH&S, CSA Z460			

General Comments:

Item No.	Audit Questions	Requirements and Reference	Compliant		Comments or Observation
			Yes	No	
Electrical Engineering / Equipment "Safety by Design"					
44.	Ensure *SLD(s)* are current, approved and P.Eng. / PE stamped.	ESP			
45.	Ensure *hazardous area classification drawings*, are current, approved and P.Eng. / PE stamped.	For determination of appropriate wiring methods and approved equipment			
46.	Is there a *Neutral Ground Resistor (NGR)* present and is it shown on the *SLD(s)* for LV and HV (e.g. 4160V, 13800V)?	CEC			
47.	Has the MCC or SWGR been sized correctly, what is the fault withstand capacity of the bus, is it noted on the *single line drawing*?	CEC			
48.	Are the *as-built single lines* adequately posted in MCC Buildings or available in the MCC Buildings?	For high voltage CEC Part 1, Rule 36-006			
49.	Is the *utility fault current* noted on the *single line diagram* with a date?	Information used to determine *Arc Flash Boundary* and *Incident Energy* at the *Working Distance*.			
50.	Has *engineering incident energy analysis* been completed? If *detailed equipment labels* are applied an *engineering-based incident energy analysis* has been completed and PE stamped report issued, is it readily available for review and is it current to within the last 5 years?	CSA Z462 Clause 4.3.5 recommends 5 year review of labels to ensure still valid.			
51.	If *engineering incident energy analysis* has been complete is the *PE stamped report* available for Qualified Electrical Workers to review?	ESP			
52.	Has the Qualified Electrical Worker confirmed that the circuit breakers or relays settings match the PE stamped report?	ESP			
53.	If *engineering incident energy analysis* has been completed was a back-up copy of the power	ESP			

Item No.	Audit Questions	Requirements and Reference	Compliant		Comments or Observation
			Yes	No	
	engineering software files and all custom libraries received and archived and backed up?				
54.	If an *engineering incident energy analysis* was completed was any *mitigation* installed?	ESP			Changes to Breaker & Relay Settings, installing an Arc Flash Relay, installing Arc Reduction Maintenance Switch(es), new Relays Installed, etc.
55.	If *incident energy analysis mitigation* has been installed is it properly labeled and understood by Qualified Electrical Workers?	ESP			
56.	If *Arc Reduction Maintenance Switches (ARMs)* have been installed are they identified in *Electrical Safe Work Procedures*?	ESP			
57.	Is *remote switching* available for power circuit breakers (e.g. mimic panel, remote operating device, timed switches)?	ESP			
58.	Are *remote rack in and out robots* available for racking in and out power circuit breakers?	ESP			
59.	Are *voltage indicating devices* installed for high voltage equipment that can be viewed through an installed viewing window before the door is opened?	ESP			Risk reduction, voltage indicated as “off” before opening the door. A test instrument is still required to be used to test all conductors and circuit parts for *absence of voltage*.

General Comments:

See *Appendix Q Summary of Options for Mitigating or Limiting Arc Flash & Shock Hazards* for a detailed list of options that could be applied.

Item No.	Audit Questions	Requirements and Reference	Compliant		Comments or Observation
			Yes	No	
Electrical Equipment Maintenance					
60.	Is an *Electrical Equipment Maintenance Program* available?	CSA Z463			
61.	Are industry Standards such as the *NETA Acceptance and Maintenance Standards* utilized?	CSA Z462, Clause 5			
62.	*CSA Z463 Guideline for Electrical Equipment Maintenance* utilized?	CSA Z463			NFPA 70B Recommended Practice for Electrical Equipment Maintenance could be referenced for guidance.
63.	Are *PMs* in place for critical electrical equipment e.g. Switchgear cleaning, MCC cleaning, power circuit breakers, relays, etc.?	CSA Z462, Clause 5			
64.	Is *Infrared Scanning* e.g. thermography completed at some determined frequency as an established PM?	CSA Z463			
65.	Are identified “hot spots” from IR scanning eliminated?	CSA Z463			
66.	Is a third-party electrical maintenance and testing contractor used? Are they a *NETA Accredited* CITY OF VANCOUVER?	Best Practice			
67.	Is electrical equipment inspected at a regular frequency for any external indication of overheating or other *abnormal condition* (e.g. standing water on the equipment or in proximity to the equipment)?	CSA Z462, Clause 5			
68.	Are the *electrical protective devices* installed remotely monitored and alarmed indicating a fault condition?	Best Practice			
69.	If there is no *remote monitoring* are frequent inspections of the electrical equipment completed specifically to check indication on electrical protective devices (e.g. fault, failure of the device)?	CSA Z462, Clause 5			
70.	Is electrical equipment shut down and inspected internally for any *abnormal conditions* (e.g. dust, evidence of rodents)?	CSA Z462, Clause 5			
71.	If electrical distribution equipment includes power circuit breakers (e.g. 480V, 600V, 4160V, 13800V,	CSA Z462, Clause 5			

Item No.	Audit Questions	Requirements and Reference	Compliant		Comments or Observation
			Yes	No	
	25000V, 35000V) are they removed inspected, cleaned and tested at a regular frequency?				
72.	Are *electrical protective relays* tested on a regular frequency? Are settings confirmed to match the P.Eng. / PE stamped *engineering report*?	CSA Z462, Clause 5			
73.	If large power transformers are owned is regular maintenance completed (e.g. oil analysis)?	CSA Z462, Clause 5, CSA Z463			
74.	Are power tools and their cords in good condition, three prong plug and are double insulated?	ESP			
75.	All power cords are three wire cords with the ground pin intact? Are they in good condition?	ESP			
76.	Electrical supplied welding equipment is bonded to ground?	Manufacturer's Instructions Followed			

General Comments:

Item No.	Audit Questions	Requirements and Reference	Compliant		Comments or Observation
			Yes	No	
Safe Installations – CEC (Canadian Electrical Code)					
77.	All requirements from the *Jurisdiction Having Authority* for the *CEC Part 1* are met for construction permits?	Provincial or Territorial Legislation e.g. Electricity Act			
78.	All requirements from the *Jurisdiction Having Authority* for the *CEC Part 1* are met for annual permitting?	Provincial or Territorial Legislation e.g. Electricity Act			
79.	*Licensed electrical contractor* used for construction or maintenance support? Have they pulled required Construction Permits?	Provincial or Territorial Legislation e.g. Electricity Act			
80.	P.Eng. drawing package issued for construction that includes *Single Line Diagrams* and requirements for grounding and bonding? Were drawings provided to *Jurisdiction Having Authority* for drawing review?	Provincial or Territorial Legislation e.g. Electricity Act			
81.	Are all electrical buildings or areas clean and free of non-essential items?	CEC 2-120 & 2-308 and CSA Z462, Clause 4.3.6.8			Housekeeping.
82.	Is minimum working space provided around electrical equipment?	CEC 2-308 1 meter minimum			
83.	Electrical equipment properly closed and protected. No exposure to energized electrical conductors or circuit parts?	CEC 2-202			
84.	Is all electrical equipment protected against mechanical damage?	CEC 2-200			
85.	Junction boxes properly labeled?	CEC 2-100			
86.	GFCI receptacles are installed and available for use?	CEC Part 1, Various Sections			

Item No.	Audit Questions	Requirements and Reference	Compliant		Comments or Observation
			Yes	No	
87.	Is all electrical equipment, including JBs, properly supported and provided with required access?	CEC 12-3010, 12-3012 & 12-3014			
88.	Are *Panel Schedules* located inside panels and as-built and legible?	CEC 2-100			
89.	Is all electrical equipment marked with *CSA* or equivalent approvals?	CEC 2-024			
90.	Are all unused wires and cables properly terminated and labeled?	CEC 2-100, 12-114 & 12-116			
91.	Where *NGR devices* are used are appropriate *warning signs* provided (e.g. on transformer or generator or both, switchgear or MCC, and supply authorities metering equipment)?	CEC 10-1106 Signs on all connected equipment.			
92.	Is all electrical equipment properly grounded?	CEC Section 10			
93.	Are all electrical equipment openings closed off and all bolts or screws in place?	CEC 12-3024			
94.	Physical protection and clearance provided around all power transformers?	CEC Section 26			
95.	Are cable trays filled to within design capacity, i.e. not overfilled?	CEC12-2202			
96.	Are cable trays properly installed, e.g. adequately supported?	CEC 12-2200			
97.	All cables and conductors must be properly supported and secured.	CEC 12-120, 12-306, 12-510,12-3022 & 12-616			
98.	Is sufficient spaced provided around electrical equipment and work areas for unobstructed access and egress in emergency situations?	CEC 2-310			
99.	Is there minimum clearance space around cable trays?	CEC 12-2200			
100.	Are cable trays properly bonded and connected to ground if required?	CEC 12-2208			
101.	Do cable trays have covers where needed?	CEC 12-2202 Appendix B			
102.	Where electrical equipment is fed from multiple sources are *warning signs* appropriately provided?	CEC 14-414			
103.	Equipment installed in hazardous areas must be approved and labeled for the location?	CEC 18-050 & 18-052			
104.	Check seals are provided and properly installed where necessary for hazardous locations?	CEC 18-108 & 18-158			

Item No.	Audit Questions	Requirements and Reference	Compliant		Comments or Observation
			Yes	No	
105.	Are receptacles in the hazardous area approved for the location?	CEC 18-124 & 18-220			
106.	Are *high voltage single lines* posted in proximity to high voltage electrical equipment?	CEC 36-006			
107.	Does high voltage equipment have proper signage?	CEC 36-006			
108.	Are high voltage cables identified?	CEC 36-006 (1) (d)			
109.	Is piping with electrical heat tracing properly labeled?	CEC 62-316			
110.	Does any electrical equipment show signs of excessive heating?	CEC 2-300			
111.	Are JB's protected from ice or water build-up?	Best Practice			
112.	Do JB's have a breather drain?	Best Practice			
113.	Are illumination levels adequate at electrical equipment?	CEC 2-314 & 26-354			
114.	Is the service transformer ground grid connected to the plant ground grid?	CEC 10-204			
115.	Is the plant ground grid network continuous, i.e. no isolated ground systems?	Good practice to avoid hazardous step-touch potential. CEC Table 52			
116.	Is the system ground conductor properly sized?	CEC 10-204, 10-206, Tables 16 & 17			
117.	Is an NGR provided and properly installed?	CEC 10-1100 thru 10-1108			
118.	Is the cable tray system continuously bonded?	CEC 12-2208			
119.	Are building skids properly grounded?	CEC Section 10			
120.	*Temporary power* installed to minimum requirements of *CEC Part 1*?	CEC Section 76			
121.	Is all electrical equipment, e.g. MCC's bonded to the plant ground system?	CEC 10-400			

Item No.	Audit Questions	Requirements and Reference	Compliant		Comments or Observation
			Yes	No	

General Comments:

Warning Signs & Barricading					
122.	*Portable barriers and warning tape* available for use to establish the *Electrical Work Zone*?	CSA Z462, Clause 4.3.7.5.2, ESP			
123.	Are MCC Building man-doors labeled with a unique identification tag, and *Warning signs* (e.g. Danger "xxx" Volts, Authorized Personnel Only)?	CSA Z462, Clause 4.3.7.5.1, ESP App H			
124.	Is all electrical distribution equipment identified with a unique tag or ID # that is indicated on the *single line diagram*?	CSA Z462, Clause 4.3.7.5.1,			
125.	Has the voltage rating of electrical distribution equipment been posted on the equipment e.g. 120/240V, 480V, 600V, 4160V?	CSA Z462, Clause 4.3.7.5.1,			
126.	Has look-alike equipment been labeled on the back and front with unique sections/cell identification IDs?	CSA Z462, Clause 4.3.7.5.1,			
127.	Are *detailed Arc Flash and Shock Warning labels* attached to Switchgear, MCCs, Panel boards etc.? Properly installed and equipment identified correctly?	ESP			
128.	Are *detailed Arc Flash and Shock Danger labels* attached to Switchgear, MCCs, Panel boards etc.? Properly installed and equipment identified correctly?	ESP			
129.	If *arc flash mitigation* has been installed is it uniquely identified and labeled indicating that it is *arc flash mitigation*?	ESP			

Item No.	Audit Questions	Requirements and Reference	Compliant		Comments or Observation
			Yes	No	
130.	Are *detailed Arc Flash and Shock equipment labels* reviewed every 5 years to confirm no changes to the electrical distribution system have occurred that would change the *incident energy* values calculated?	CSA Z462, Clause 4.3.5.1,			No significant changes that would increase or lower the short circuit current.
General Comments:					
Administrative Controls Training					
131.	Based on worker role appropriate *technical training* has been received?	CSA Z462, Clause 4.1.6.4.1			
132.	Based on worker role *CEC Part 1* latest edition *update training* has been received?	ESP			*CEC Part 1* is adopted into law by the *jurisdiction having authority*. QEW Journeyman Electricians should be aware of the latest requirements that could impact new capital work installations or ongoing maintenance.
133.	*Electrical safety training* has been provided to Qualified Electrical Workers?	ESP			
134.	*Electrical safety training* has been provided to Non-Electrical Workers?	ESP			
135.	*Refresher training* on *CSA Z462* and its related work practices is completed for appropriate worker roles at least every 3 years?	CSA Z462, Clause 4.1.6.4.3			
136.	Qualified Electrical Workers have received *First Aid and CPR training*?	CSA Z462, Clause 4.1.6.3			
137.	If an AED is available for use workers have been trained on how to use the AED properly?	CSA Z462, Clause 4.1.6.3			
138.	Review the *Training Matrix* in *Appendix U of the Electrical Safety Program* and check *training records* to confirm that appropriate worker roles have the training identified and it is still valid?	ESP			

Item No.	Audit Questions	Requirements and Reference	Compliant		Comments or Observation
			Yes	No	
General Comments:					
Administrative Controls Procedures and Practices					
139.	The latest revision of *CSA Z462 Workplace electrical safety Standard* is available for reference by workers and supervisors?	ESP			At least one copy should be available for workers reference. Recommended at least the supervisor has a copy.
140.	*Job Briefing & Planning* forms are filled out by QEWs when planning their *energized electrical work tasks*? *CITY OF VANCOUVER tail board or tail gate meetings* held and documented?	CSA Z462, Clause 4.1.7.7, ESP App C			
141.	All required *risk assessment forms*, and *permits* required by the overall *Occupational Health & Safety Management system* are completed for *energized electrical work tasks*? Is the requirement for an *EEWP* identified on the overall *permit*?	OH&S, ESP			
142.	*Arc Flash and Shock Risk Assessments* are completed for all *energized electrical work tasks* as outlined in the *Electrical Safety Program*?	ESP, CSA Z462 Clause 4.3.3.2.1			
143.	An *Energized Electrical Work Permit (EEWP)* is completed for applicable work tasks? If *EEWPs* are issued in "Annualized" version they have been reviewed and are valid?	ESP, CSA Z462, Clause 4.3.2.3			
144.	An *Arc Flash & Shock Risk Assessment Form – Table Method or Detailed Label* is completed for *energized electrical work tasks*?	ESP			
145.	An *Energized Electrical Job Risk Assessment (EEJRA) form* is completed for every *energized electrical work task*? *EEJRA* is used as an *EEWP* and appropriate information is completed on the *EEJRA* to make it an *EEWP*, justification was written on the back?	ESP			
146.	*Electrical safe work procedures* are used for *energized electrical work*?	ESP			

Item No.	Audit Questions	Requirements and Reference	Compliant		Comments or Observation
			Yes	No	
147.	*Electrical safe work procedures* are *audited* on an annual basis by workers and their supervisors?	ESP			
148.	The *Electrical Work Zone* is been established before *energized electrical work* is performed with red "*Danger*" tape and a tag?	ESP			The *Electrical Work Zone* should be established at the *Limited Approach Boundary for shock* or the *Arc Flash Boundary* whichever is further away?
149.	*Work tasks* on *temporary power systems* are analyzed for *arc flash and shock risk exposure, Boundaries* established and *Electrical Specific PPE, Tools & Equipment* selected?	ESP			
150.	*Plug and cord condition* are been checked by workers before use?	ESP			
151.	Work related to personnel and equipment near *Overhead Power Lines* is identified and when required *OH&S Minimum Approach Distances (MAD)* utilized?	ESP			
152.	Workers are alert when completing *energized electrical work tasks*?	ESP, CSA Z462, Clause 4.3.6			
153.	No work tasks are allowed where *blind reaching* is identified?	ESP, CSA Z462, Clause 4.3.6			
154.	*Adequate illumination* for *energized electrical tasks* is established before the *work task* is completed?	ESP, CSA Z462, Clause 4.3.6			
155.	Any *energized electrical work* in confined or enclosed spaces that is justified has additional control measures implemented?	ESP, CSA Z462, Clause 4.3.6			
156.	Housekeeping in and around electrical distribution equipment (e.g. Panel boards, Lighting Transformers, MCCs, Switchgear, etc.) is controlled so that there is at least 1 m clearance and free ingress and egress?	ESP, CSA Z462, Clause 4.3.6			
157.	All MCC / Electrical Room / Substations have appropriate *Warning or Danger signs* installed?	ESP			
158.	When required an *Electrical Safety Watch/Standby person* is utilized for *energized electrical work* that is identified as requiring it?	ESP, CSA Z462, Clause 4.3.7.5.3			
159.	*Look-alike equipment* has been suitably labeled with an *identification tag* on the back and front?	ESP, CSA Z462, Clause 4.3.7			
160.	Portable ladders used for electrical work have non-conductive side rails?	OH&S, ESP			
161.	The use of metal scaffolding for *energized electrical worker* isn't allowed? Metal scaffolding is not used in proximity to *energized electrical equipment* where there are *exposed conductors or circuit parts*?	ESP			

Item No.	Audit Questions	Requirements and Reference	Compliant		Comments or Observation
			Yes	No	
162.	Qualified Electrical Workers are not wearing metal, conductive jewelry when completing *energized electrical work* and are inside the *Restricted Approach Boundary*?	ESP, CSA Z462, Clause 4.3.6.4			
163.	For *complex switching and isolation* a procedure(s) are implemented and used to execute the work?	ESP			
164.	*Switching order forms* are used when required?	ESP			
General Comments:					
Electrical Specific PPE, Tools & Equipment					
165.	*Electrical Specific PPE, Tools & Equipment* readily available and are they adequately rated?	ESP			
166.	QEWs wear 100% cotton natural fibre clothing to work every day?	ESP			All workers that may be exposed to *arc flash* must wear non-meltable clothing underneath *arc-rated clothing*. There is no concern if *arc-rated clothing* is what is worn against the skin as *every daywear clothing*.
167.	*Every daywear clothing* is *arc-rated*, indicated on the clothing collar tag or on the inside of the garment? *Arc rating* in *ATPV or* E_{BT} is minimum 8 cal/cm^2 (Level 1)? Label is compliant with *ASTM F1506 labeling requirements*? The clothing is clean and no visible damage or contamination?	ESP			
168.	Does *arc-rated every daywear clothing* have any exposed (not insulated/covered by fabric or other non-conductive materials) conductive metal snaps or zippers on the inside of the garment?	ASTM F1506			
169.	Underwear worn by workers under arc-rated every daywear is made of either 100% natural fibre or arc-rated materials? Potential pass through pockets or side slit openings in coveralls and bib-overalls can be sealed to prevent underwear ignition?	CSA Z462 Clause 4.3.7.3.11			
170.	If layering *arc-rated protective garments* for additional protection is the appropriate *ASTM F1959 testing documentation* on file and up to date with the most current edition of the standard? e.g. *ASTM F1959*.	CSA Z462, Clause 4.3.7.3.9			
171.	When *high visibility stripping* is used on *arc-rated protective garments* the material is *arc-rated or FR*?	ASTM F1506			

Item No.	Audit Questions	Requirements and Reference	Compliant		Comments or Observation
			Yes	No	
	The stripping pattern is compliant with applicable *Standard for High Visibility Safety Apparel*?				
172.	All Logos, name tags, and other heraldry, such as flag patches and CITY OF VANCOUVER insignias are manufactured using inherently *FR thread*? Alternatively designs, logos and other heraldry to be kept smaller in size than a playing card (e.g. large CITY OF VANCOUVER logos across the back of the garment shall not be used).	ASTM F1506			
173.	*Arc-rated faceshields* are available for workers and arc-rated 12 cal/cm^2 *ATPV* (*Electrical Safety Program, Level 1*)? No visible damage and suitable for use? Stored in protective storage bag?	ESP, CSA Z462, Clause 4.3.7.3			
174.	*Arc-rated faceshields*, hard hats, accessories and components are *pre-use inspected* before each use?	CSA Z462 Clause 4.3.7.3.13			
175.	*Arc-rated faceshields and arc flash hood windows* are marked with *Z87.1+*? All *arc-rated faceshields and arc flash suit hoods* shall meet the requirements of *ASTM F2178* including *ANSI Z87.1 High Impact protection*.	ASTM F2178			
176.	All *arc-rated faceshields and arc flash suit hoods* have anti-scratch coatings (outside) and permanent anti-fog coatings (inside)?	ESP			
177.	*Arc-rated balaclavas* of the equal or greater arc rating (*ATPV Electrical Safety Program, Level 1*) as the *arc-rated faceshield* are available to every worker?	ESP, CSA Z462, Clause 4.3.7.3.10			
178.	When *electrical specific PPE* is shared are *arc-rated balaclavas and arc flash suit hoods* are cleaned and disinfected before each use?	OH&S Regulations, ESP			
179.	Is an *arc-rated arc flash suit* available consisting of a hood, coat and bib-overall. A minimum 40 cal/cm^2 arc rating (*Electrical Safety Program, Level 2*) as *ATPV or* E_{BT}? Does the hood have a hood ventilation system installed? The arc flash suit including hood window (lens) is clean and no visible damage or contamination? Is the arc flash suit a lab coat style with shin covers?	ESP, CSA Z462, Clause 4.3.7.3			If the *arc flash suit* is a lab coat style with Velcro down the front, then when the worker bends down the bottom velcro will open and the worker will not be protected if there is an *arc flash*. This style of *arc flash suit* is not recommended.
180.	*Hood Ventilation system* has no exposed non-FR or arc-rated components, e.g. Fan, hose, battery, wiring. The *Hood Ventilation System* batteries are charged and replacement units or recharging station is readily available?	CSA Z462 Clause 4.3.7.3.10			

Item No.	Audit Questions	Requirements and Reference	Compliant		Comments or Observation
			Yes	No	
181.	*Arc Flash suits* and all included components are pre-use inspected before each use?	CSA Z462 Clause			
182.	Applicable workers have been trained on how to properly wear (don/doff), care, store and maintain their individually assigned or shared *arc-rated protective equipment*?	CSA Z462 Clause 4.3.7.3.13			
183.	All applicable testing documentation for *arc-rated PPE* is on file and current to the most recent edition of the standards? i.e. *ASTM F1959, ASTM F2178, ASTM F2621,* etc.	ESP			
184.	Hard hats worn with *arc-rated faceshields or arc flash suit hoods* are *Class E*, non-conductive to 20kV? Hard hat suspension consists of a ratchet style configuration?	ESP, CSA Z462, Clause 4.3.7.3			
185.	Have workers been advised of unique laundering instructions for *arc-rated clothing*?	ESP, CSA Z462, Clause 4.3.7.3			
186.	If industrial laundering, laundering at the workplace or home laundering is utilized for *arc-rated clothing*, have *written laundering instructions* been provided?	ESP, CSA Z462, Clause 4.3.7.3			The *arc rating* of some clothing (e.g. treated cotton) can be negatively affected with continuous washing in fabric softener and bleach. Employer needs to ensure *manufacturer's laundering instructions* are followed.
187.	*Arc-rated gloves* are used for protection of hands where there is an *arc flash risk* related to an *energized electrical work task* and no shock risk?	ESP, CSA Z462, Clause 4.3.7.3			Using an *arc-rated glove* would be approved, but is not recommended as these gloves are large and oversized and the worker cannot effectively hold certain tools.
188.	*Leather work gloves* are used for protection of hands where there is an *arc flash risk* related to an *energized electrical work task* and no shock risk?	CSA Z462, Clause 4.3.7.3.10			*Leather gloves* are not currently tested for an *ATPV*, but informal tests and depending on the glove thickness can provide protection for >10 cal/cm^2.
189.	*Rubber insulating gloves with leather protectors* rated for the working voltage are used for protection of hands when there is an *arc flash risk* related to an *energized electrical work task* and no shock risk?	ESP, CSA Z462, Clause 4.3.7.3			
190.	QEWs are wearing *approved safety footwear*, Grade 1, Ohm rated (e.g. should have an Omega symbol tag)?	ESP, CSA Z462, Clause 4.3.7.3			
191.	*Approved Safety Glasses or Goggles* are available and worn underneath the *arc flash suit hood and the arc-rated faceshield*?	ESP, CSA Z462, Clause 4.3.7.3			
192.	*Appropriately rated canal insert ear plugs and/or ear muffs* (dual hearing protection) are available and worn underneath the *arc flash suit hood and the arc-rated faceshield*?	ESP, CSA Z462, Clause 4.3.7.3			

Item No.	Audit Questions	Requirements and Reference	Compliant		Comments or Observation
			Yes	No	
193.	*Electrical Specific PPE, Tools & Equipment* are properly stored e.g. individual bags, cases, lockers used etc.?	ESP, CSA Z462, Clause 4.3.7.3			
194.	An *Inventory list* of all *Electrical Specific PPE, Tools & Equipment* is available?	ESP, CSA Z462, Clause 4.3.7.3			
195.	*Check in/out system* is utilized for shared *Electrical Specific PPE, Tools & Equipment*?	ESP, CSA Z462, Clause 4.3.7.3			
196.	Has *Electrical Specific PPE, Tools & Equipment* been uniquely tagged (including their cases or bags), e.g. *rubber insulating gloves, hot sticks, temporary protective grounds*, and kit bags or lockers for reference in procedures and tracking purposes?	ESP			
197.	Is any *Performance Management* of *Electrical Specific PPE, Tools & Equipment* in place e.g. *Electrical Specific PPE, Tools & Equipment* evaluated that it worked as intended?	ESP, CSA Z462, Clause 4.3.7.3			
198.	*Rubber insulating gloves* for low voltage < 750V work available, stored properly, not damaged, clean, tested current (e.g. within last 6 months) and at least Class 0, 1000 V rated?	ESP, CSA Z462, Clause 4.3.7.3			
199.	*Rubber insulating gloves* for use on >750 V work available, stored properly, not damaged, clean, tested current (e.g. within the last 6 months), rated for at least Class 1 (7.5 kV) and Class 2 (17 kV) as required?	ESP, CSA Z462, Clause 4.3.7.3			
200.	*Rubber insulating gloves and leather protectors* are pre-use inspected by QEWs, both visual and air test?	ESP, CSA Z462, Clause 4.3.7.3			
201.	*Temporary Protective Grounding* cables on-site and if yes, are they rated for *maximum fault current*, at the *assumed clearing time*? Have they been testing in the last 36 months?	ESP, CSA Z462, Clause 4.2.3			
202.	*Temporary Protective Grounding* cables are *pre-use inspected* before each use?	ESP, CSA Z462 Clause 4.2.3			
203.	*Insulated hand tools* for use on equipment <750 V available, rated for 1000 V (e.g. double triangle with 1000V beside the triangles), and stored properly in wrap or protective case? Not stored in the same tool box or pouch with normal tools?	ESP, CSA Z462, Clause 4.3.7.3			
204.	*Insulated hand tools* are *pre-use inspected* before use?	ESP, CSA Z462, Clause 4.3.7.3			
205.	*Insulated hand tools* are available and used for DC Battery termination work?	ESP, CSA Z462, Clause 6.3.3			

Item No.	Audit Questions	Requirements and Reference	Compliant		Comments or Observation
			Yes	No	
206.	For DC Battery work where the batteries use liquid electrolyte are both *chemical and electrical PPE, Tools & Equipment* worn?	ESP, CSA Z462, Clause 6.3.3			
207.	*Shotgun hot stick*, 4' length available for use for application of *temporary protective grounds*? Test date indicates tested within last 24 months?	ESP, CSA Z462, Clause 4.3.7.3			
208.	If a *Rescue Hot Stick* is available has it been tested within the last 24 months?	ESP, CSA Z462, Clause 4.3.7.3			The use of a *Rescue style hot stick* is not mandatory. Any *approved hot stick* can be used for *emergency release of shock victim*.
209.	All *hot sticks* are *pre-use checked* before use and kept clean and stored in manufacturer's storage bag (where one is available)?	ESP, CSA Z462, Clause 4.3.7.3			
210.	*Test Instruments* such as *Digital Multi-Meters* and other electrical test equipment for <750 V work certified to at least Category IIII, 600 V? Stored in protective case?	ESP			
211.	*Test Instruments* such as *Digital Multi-Meters and voltage detectors* are *pre-use inspected* before use?	ESP			
212.	*Test Instruments* such as *Digital Multi-Meters and voltage detectors* are *pre-use function tested* on 120V receptacle before and after use to verify functioning?	ESP			
213.	Is a *high voltage proximity detector* available for use?	ESP			
214.	Is a "*voltage source*" from the manufacturer available to *pre-use test* the *high voltage proximity detector*?	ESP			Not mandatory, *standard test* is to test *voltage detector* on 120VAC receptacle or fluorescent light fixture before and after used to verify functioning.
215.	*High voltage proximity detector* is *pre-use function tested* on lighting or receptacle?	ESP			
216.	If a *fall arrest harness* is required for *arc flash risked work* is it *ASTM F887 approved*, which is *arc-rated* at 40 cal/cm^2?	ESP, CSA Z462, Clause 4.3.7.3			
217.	Is Class 0, 1000VAC maximum use *rubber insulating blanket* available for use? Where the magnets or plastic clips purchased with the *rubber insulating blanket*?	ESP, CSA Z462, Clause 4.3.7.3			

General Comments:

APPENDIX X. ELECTRICAL SAFE WORK PROCEDURE (ESWP) TEMPLATE

The following template may be used by your company for developing *electrical safe work procedures*:

- Template for *Electrical Safe Work Procedures (ESWP)*

Form #: ESP0011

Procedure 1 – Electrical Safe Work Procedure (ESWP) Template

CITY OF VANCOUVER

Electrical Safe Work Procedure

[00000]

Electrical Safe Work Procedure [TEMPLATE] - <Work Task Title>

Work Task: *<Briefly describe the work task to be completed.>*	**Location:** *<Identify the physical location where the work task will be performed.>*
Scope of Work: *<Briefly describe the scope of the work task being performed, identify abnormal conditions.>*	**Notes:** *<Add other details related to the work task.>*
Employees/Contractors Performing Task: - *<Identify ALL individuals who will be performing electrical work related to this work task.>*	
Supervisor / Forman: *<List person(s) responsible for management of workers.>*	**Analysis By:** *<List the person that analyzed and created this specific procedure.>*
Approval By: *<List individual who has reviewed and approved this procedure for use.>* Qualified Electrical Worker:_____ Electrical Supervisor:_____ Safety Coordinator:_____ Maintenance Superintendent:_____ Maintenance Manager:_____ Other:_____	

Tools & Equipment: *<List requirements for the work task.>*	**Materials Required:** *<List items needed to complete the work task.>*	**Personal Protective Equipment:** *<List requirements for the work task.>*

Step #	Sequence of Steps for the Work Task	Identified Potential Health or Safety Hazard	Hazard Control or Action, Recommended - Safe Operating Procedure or Comments
INFO	*<Identify a detailed sequence of events that the worker must perform in order to successfully complete the entire work task. Breakdown actions into small individual logical steps.>*	*<List any potential hazards that could be present or as a result of this action.>*	*<Identify that Risk Assessment Procedure actions are required to mitigate risk of worker injury or equipment damage. Identify any supporting safe procedures for performing this specific task. Consider abnormal consequences of the step's action. Reference City Of Vancouver LOTO policy or practice.* *For Arc Flash and Shock Risk Assessment, note "Follow requirements of Electrical Safety Program, establish the Electrical Work Zone and select appropriate Electrical Specific, PPE, and Tools & Equipment."*>

Step #	Sequence of Steps for the Work Task	Identified Potential Health or Safety Hazard	Hazard Control or Action, Recommended - Safe Operating Procedure or Comments
1			
2			
3			
4			
5			
6			

Note:

Pictures can be added to the bottom of the procedure or imbedded in the procedure steps for repetitive typical work task procedures.

APPENDIX Y TEMPORARY POWER CERTIFICATE (TPC) FORM

Form # ESP00012

Temporary Power Certificate

This form shall be used for planning, approval and quality control of temporary electrical power installations and connections that will be put in service for a maximum duration of 12 months. The issued *Temporary Power Certificate (TPC)* will be valid for a maximum of 12 months from the issued date and the certificate will expire. The temporary electrical power installation or connection shall be reviewed to confirm that it is still valid to be "temporary." A complete inspection will be required of the entire temporary power system and re-approval is required for an extension.

Temporary power installations and connections require that the *City of Vancouver Management of Change (MOC)* process be followed with required MOC documentation. Forward completed certificates to the *Change Management Custodian* for filing. This form can be filled in online and printed or printed blank. Press tab to advance through fields.

This form can be customized with your company logo.

This form can be printed directly or provided for use in a Non-Carbon Return (NCR) Book with sequential numbering (i.e. so there is never a duplicate Certificate) and completed or filled in online.

ESP00012 – Temporary Power Certificate (TPC) Form

Name of Requester:	**Date** (yyyy-mm-dd): _____/____/____
Temporary Power Requirement Description:	**TPC #:** _____

Planning – System Operating Conditions:		
Utility or Temporary Power Generation Transformer or Generator Rating: _____**kVA** / _____**kW**		
Voltage: _____ **Volts**	Rated Current: _____ **Amps**	____ **Phases**
Maximum Operating Temperature: _____**°C** _____**°F**	Other:	
Other:		

Planning – Operating Environment for Temporary Electrical Connection check all the apply			
☐ Class	☐ Division	☐ Zone	☐ Unclassified
Temperature – Max / Min: _____**°C** _____**°F**		Max Temp or T-Code: _____**°C** _____**°F**	
Corrosive Gases: _____			
☐ Wet	☐ Dry	☐ Indoor	☐ Outdoor
☐ Dusts	☐ Requires Mechanical Protection?:		
☐ Other: Enter any other applicable conditions.			

Specifications: Document a summary of the electrical power distribution equipment that is required.

Checklist for Safeguarding Protection and Controls Required:			
Requirement	**Yes**	**No**	**Description of Control**
Over Current Protection?	☐	☐	
Overload Protection?	☐	☐	
Temperature Protection?	☐	☐	
Electrical Grounding?	☐	☐	
Electrical Bonding?	☐	☐	
Single Line Diagrams (SLD) and other Drawings Attached?	☐	☐	
Load / Source Tagged?	☐	☐	
Materials Suitable for Installation Environment (i.e. general purpose or hazardous locations)?	☐	☐	
Material Suitable for Service Conditions?	☐	☐	
Approved Materials?	☐	☐	
Alternately Approved Materials?	☐	☐	
CEC or NEC Wiring Method Applied?	☐	☐	
Hazardous Location Seals Identified?	☐	☐	
Mechanical Protection?	☐	☐	
Any Electrical Variances Approved by the Jurisdiction Having Authority?	☐	☐	
Inspection Required by the Jurisdiction Having Authority?	☐	☐	
Cables are Adequately Protected?	☐	☐	
Danger High Voltage Warning Signs Installed?	☐	☐	
Appropriate Flagging Installed for Cables?	☐	☐	

Quality Control and Execution:	
Planning Approvals: (In emergencies, a Qualified Electrical Worker LV, or Qualified Electrical Worker HV)	
QEW LV, or QEW HV Signature: _____	Installation Date: _____
QEW LV, or QEW HV Approval for Extension Signature: _____	Extension Date: _____
Change Management Expiry Date: _____	Until Date: _____
Qualified Electrical Worker LV (QEW LV), or Qualified Electrical Worker HV (QEW HV) has confirmed the following are correct as specified above and temporary power installation is installed with no visible damage.	

	Requirement	Check
i	Installed and inspected as per attached drawings and material specifications?	☐
ii	Safeguarding controls installed as specified above?	☐
iii	Perform function test?	☐
iv	Installation recorded?	☐
v	Complete visual electrical inspection?	☐

Sign-off:

QEW LV, or QEW HV - Installed and approved for energization:

Initials: _____ Date: (yyyy-mm-dd) _____/____/____ Time: _____ ☐ AM ☐ PM

Temporary Power System or Electrical Connection Permanently Removed:

QEW LV, or QEW HV: _____

Date: (yyyy-mm-dd) _____/____/____ Time: _____ ☐ AM ☐ PM

APPENDIX Z MANAGEMENT OF CHANGE (MOC) REQUEST FORM

Form # ESP00015

Management Of Change (MOC) Request Form

This form shall be used for managing changes to the *ESP* and the associated Forms, Flow Charts and any other documents or files included in the *ESP* management system as outlined in *Section 15 Management of Change*.

ESP document or policy changes require that the *CITY OF VANCOUVER Management of Change (MOC) process* be followed with required MOC documentation. Forward completed certificates to the *Change Management Custodian* for filing. This form can be filled in online and printed or printed blank.

This form can be customized with your CITY OF VANCOUVER logo.

This form can be printed directly or provided for use in a Non-Carbon Return (NCR) Book with sequential numbering (i.e. so there is never a duplicate) and completed or filled in online.

ESP00015 – Management Of Change (MOC) Request Form

General Information:	
Originator:	**Date** (yyyy-mm-dd): _____/____/____
Department:	**MOC #:** _____
Sent to:	
Equipment, facility or process affected:	
Basis for the Change: Check those applicable	
☐ Arc flash incident energy level reduction	
Arc flash risk reduction, Severity (Se) ☐ ☐ Frequency (Fr) ☐ Probability (Pr) ☐ Avoidance (Av)	
Shock risk reduction, Severity (Se) ☐ ☐ Frequency (Fr) ☐ Probability (Pr) ☐ Avoidance (Av)	
☐ Other, specify:	
Description of Proposed Change and Potential Hazards	
Summarize the basis for the proposed change and any potential safety, health, or environmental impacts from the proposed change. Describe how the change will affect the ESP, SOPs, maintenance, training, etc. State the change start and end dates.	
Start Date: _____/____/____	**End Date:** _____/____/____

Approval or Disapproval Sign-off:

Name & Signature	Organization/ Position	Yes	No	Date
→		☐	☐	_____/____/____
→		☐	☐	_____/____/____

Comments:

COV Management Of Change Form 2018 Rev 1.0 Page **1** of 1

APPENDIX 16
OWNER'S LIST OF KNOWN WORKPLACE HAZARDS

See attached.

Owners List of Known Workplace Hazards

CONTRACT TITLE CIVIL/ELECTRICAL U/G_____

PROJECT MANAGER (CITY EMPLOYEE)___STEPHEN LOWRY_____

CONTRACT NAME & # (IF KNOWN) _____

Purpose

This document shall be completed by the project manager, who shall list all the **known** worksite hazards and all the **existing** work process hazards that will be associated with the upcoming contract. The completed document shall then be provided to all potential contractors, as part of the tender package, so the project can be bid appropriately based on the known worksite hazards.

Definitions

Project Manager - the City employee designated to be the liaison with the contractor for the purpose of managing, overseeing, coordinating or in any other way administering the contract.

Instructions for Completion

The document must be completed in full. Choices for each entry are:

Y - Yes - the known worksite hazard or existing work process hazard does exist

N - No - the known worksite hazard or existing work process hazard does not exist*

NA - Not Applicable - worksite hazard or existing work process is not applicable for this contract type

TBD - a third party (environmental consultant) will address the issue (primarily for a hazardous materials assessment)

*based on reasonable estimation from all input by persons with expertise or relevant knowledge and understanding

Information from Hazardous Materials Assessments Provided by a Third Party

A hazardous materials assessment may be completed prior to the Project Manager completing the Owners List of Known Workplace Hazards. Any such assessment should be referenced by the Project Manager in this document and provided with the tender package. Hazardous materials may include asbestos, lead, crystalline silica, ammonia, PCB's, CFC's, moulds, mercury, ozone depleting substances (ODS), radioactive substances.

Assistance in Completing this Document

If you have questions while completing this document, or are unsure if the listed hazards apply, please seek assistance from Health and Safety (604.871.6078 or healthandsafety@vancouver.ca).

HAZARD OR ISSUE	Project Manager
1. ASBESTOS-CONTAINING MATERIALS - disturbance or penetrations of flooring, walls, ceiling tiles, pipe lagging, ac pipe, transite siding, particularly in older facilities; e.g., furniture/fixture installation, carpeting/flooring services, and boiler repair/tune-up services.	Yes (Y) No (N) Not Applicable (NA) To Be Determined (TBD)
a) Asbestos containing materials (ACM) will be encountered	Y N NA TBD
b) A hazardous materials assessment for asbestos is provided in the tender package	Y N NA TBD
c) A hazardous materials assessment for asbestos is the responsibility of the contractor	Y N NA TBD

2. LEAD-CONTAINING MATERIALS - disturbance of lead-based paint, particularly in older facilities. Also present in certain electrical circuitry and metal alloys; .e.g., overhead bridge crane maintenance/repair, high-voltage cable splicing services, boiler repair/tune-up services, fixture installation services, and chiller maintenance/repair services.	Yes (Y) No (N) Not Applicable (NA) To Be Determined (TBD)
a) Inorganic lead-containing materials may be encountered	Y N NA TBD
b) A hazardous materials assessment for lead is provided in the tender package	Y N NA TBD
c) A hazardous materials assessment for lead is the responsibility of the contractor	Y N NA TBD

3. OTHER HAZARDOUS MATERIALS - may include ammonia, PCBs, CFCs, moulds, mercury, ozone depleting substances (ODS), radioactive substances, sewage, unknown contaminated materials, other: (list other here)_____	Yes (Y) No (N) Not Applicable (NA) To Be Determined (TBD)
a) A hazardous materials assessment for ammonia is provided in the tender package	Y N NA TBD
b) A hazardous materials assessment for (list the specific hazardous material) will be provided in the tender package	Y N NA TBD
c) A hazardous materials assessment for (list the specific hazardous materials) will be the contractors responsibility	Y N NA TBD

4. CONFINED SPACES - working in vaults, chambers, pits, tanks, etc.; e.g., construction,	Yes (Y)

inspection and testing services, water/fuel storage tank clean-out services, and utility corrosion inspection services.	No (N) or Not Applicable (NA)
a) A hazard assessment (for entry and inspection only) from the City of Vancouver is provided in the tender package	Y N NA
b) The City of Vancouver shall provide procedures to isolate adjacent piping, or to lock out equipment (complicated systems only)	Y N NA
c) The contractor shall be responsible for isolation and lockout procedures in the confined space	Y N NA

5. LOCK OUT - industrial equipment maintenance, power machinery repair services, pump maintenance/repair services, mechanical refrigeration systems, elevator repair, overhead bridge crane maintenance/repair services, cathodic protection services, hydraulic test systems repair/service, and air compressor rebuilding services.	Yes (Y) No (N) or Not Applicable (NA)
a) Lockout will be required to isolate or prevent the unexpected release of energy (electrical - potential arc flash or electrical shock, mechanical, hydraulic, chemical, thermal, kinetic, gravitational, pneumatic)	Y N NA
b) Work will be performed on or near energized equipment, lines, or circuits	Y N NA

If yes to a) or b) describe:

Circuits in service panels may need to be Isolated. Work may be performed in close proximity To energized underground Electrical conductors and or conduits

6. FALL PROTECTION - tree pruning, window and ledge cleaning, window replacement, overhead bridge crane maintenance/repair services, roll-up door replacement, tent installation, awning/canopy installation, overhead air exchange installation, construction inspection and testing services.	Yes (Y) No (N) or Not Applicable (NA)
a) Workers will be exposed to a potential fall in excess of 3 m (10 feet), or to a fall of less than 3 m which would likely result in a serious injury (ex. impalement on rebar)	Y N NA
b) Scaffolding or ladders will be required to be secured to a building or structure	Y N NA

7. OVERHEAD AND UNDERGROUND UTILITIES - tree pruning services, tree removal, utility relocation or replacement, underground utility identification (digging with powered equipment), concrete sawing services, pole painting	**Yes (Y) No (N) or Not Applicable (NA)**
a) There will be electrical hazards (arc flash and/or electrical shock) associated with overhead power lines such as limits of approach and contact or underground utilities	**Y N NA**
b) Necessary assurances (in writing) have (or will be) obtained by the City, through the utility company, for any work where minimum limits of approach cannot be maintained (provide documentation and review at pre job meeting with the successful contractor candidate)	**Y N NA**
c) Necessary assurances must be obtained (in writing) by the successful contractor, through the utility company, for any work where minimum limits of approach will not be able to be maintained	**Y N NA**
d) Underground or hidden utilities are located on the job site. Any excavation or drilling work in proximity to an underground utility service must be undertaken in conformity with the requirements of the owner of that utility service	**Y N NA**

If yes to c), and the specific physical locations where minimum limits of approach will not be able to be maintained are known, how will this information be provided to the contractor?

The Contractor may perform some work with a Hydro-Vac truck. This truck may be operating within the limits of a approach. The contractor must inform the Utility and the CITY.

8. CONSTRUCTION, EXCAVATION, SHORING AND DEMOLITION	**Yes (Y) No (N) or Not Applicable (NA)**
a) As Prime Contractor, the City of Vancouver project manager will submit the Notice of Project	**Y N NA**
b) Workers will be required to enter an excavation over 1.2m (4 ft) in depth	**Y N NA**

9. CHEMICALS, SOLVENTS, FUMES, VAPORS, AND/OR DUSTS (existing work processes or known worksite hazard only) - ice rinks, swimming pools, cleaning solvents, adhesives, paints, coatings, binders; e.g., storage tank clean-out services, countertop installation (epoxies), and flooring	Yes (Y) No (N) or Not Applicable (NA)
a) The worksite has chemicals solvents, fumes, vapors or dusts that may affect the contractor	Y N NA
b) Material Safety Data Sheets for chemicals currently in use at the worksite will be available, on request, to the contractor	Y N NA

If yes to a), list the work processes and/or chemicals in use:

The Contractor may be exposed to Silica if they are performing any cutting of sidewalks or roads.

10. NOISE - (existing work processes only)	Yes (Y) No (N) or Not Applicable (NA)
a) Employees will be exposed to noise levels above 85dbA	Y N NA

OTHER HAZARDS (NOT IDENTIFIED ABOVE)
a)
b)
c)

KNOWN WORKPLACE HAZARDS LIST COMPLETED BY	
Project Manager Name (print): Stephen Lowry	
Project Manager Signature:	Date: January 27th 2020
Title: Superintendent II	Phone:604-871-6768

APPENDIX 17
ARCHAEOLOGY/HERITAGE RESOURCE PROTECTION

See attached.

CITY OF VANCOUVER
POLICIES AND PROCEDURES
Engineering Services

SUBJECT:	Archaeology/Heritage Resource Protection		
CATEGORY:	Environmental	**POLICY NUMBER:**	E-009

PURPOSE

City-led construction projects requiring ground-altering activities need to comply with the provisions of the BC *Heritage Conservation Act* (HCA). The purpose of the HCA is to facilitate the protection and conservation of heritage sites in British Columbia, including archaeological sites within the City of Vancouver.

LEGISLATION

All archaeological sites, whether on Provincial Crown or private land (including land under water) that are known or suspected to predate AD 1846, are automatically protected under the HCA (S.13). Certain sites, including human burials and rock art sites with heritage value, are automatically protected regardless of their antiquity. Shipwrecks and plane wrecks greater than two years of age are also protected under the HCA. The HCA does not distinguish between those archaeological sites which are "intact," (i.e., those sites which are in a pristine, or undisturbed state) and those which are "disturbed" (i.e., those sites which have been subject to alteration, permitted or otherwise). All archaeological sites, regardless of condition, are protected by the HCA, as described above.

HCA-protected archaeological sites or objects cannot be disturbed or altered without a permit issued by the Archaeology Branch (Ministry of Forests, Lands and Natural Resource Operations and Rural Development). While the HCA does not apply on Federal Crown land (e.g., First Nations Reserves, Stanley Park, and parts of Vanier Park) and HCA permits are therefore not required, heritage resources are otherwise managed in the same manner as on Provincial Crown or private land in British Columbia.

SCOPE

This policy applies to all City-led engineering work sites where ground-altering activities are proposed.

PROCEDURES

Project Planning Phase

The Project Manager is responsible for ensuring work is completed in accordance with the HCA and First Nation permit conditions, as required.

1. For projects involving ground disturbance, the Project Manager, Superintendent or Designate will consult the Provincial Heritage Site layer in VanMap. Review of the layer in VanMap will help determine whether any part of the work site is located within a register or within an archaeological management buffer in VanMap.

   If the work site is not in either of these areas, there may still be a possibility of encountering archaeological materials (i.e., area of archaeological potentials) -if in doubt, the best practice is to contact Engineering Archaeologist early in the project planning phase for direction.

   Archaeological potential will be determined by the Engineering Archaeologist who will review the scope and location of proposed work via the Heritage Site Information Review Form (HSIRF) process (VanDoc no. DOC/2017/118624). This form is to be completed by the Project Manager, Superintendent or Designate.

   If the work site meets the criteria below:
   - Within a registered and regulated archaeological site
   - Within 50 m of a register and regulated archaeological site
   - Within an archaeological management buffer (VanMap)
   - In an area of archaeological potential (as determined by the Engineering Archaeologist)

   The Project Manager, Superintendent or Designate will:

   a. Complete applicable sections of the HSIRF and submit the form to the Engineering Archaeologist for review and input.
   b. Once the form has been completed by the Engineering Archaeologist, the Project Manager will review the recommendations that may include: reliance on the General City of Vancouver Guidelines for Archaeological Chance Find Management (VanDocs no. DOC/2016/289908) or the need for more detailed archaeological work (e.g., site inspection, overview assessment (AOA) or impact assessment (AIA)).
   c. All work within 50 m of a registered and regulated archaeological site or at the discretion of Engineering Archaeologist will be subject to First Nation notification or referral. Referrals will be sent to Musqueam, Squamish and Tsleil-Waututh Nations (MST) for a 30-day review period. The Nations will have 7 days to review the notification.

2. If the work site is located beyond the archaeological management buffer or in area considered to have archaeological potential, the Project Manager is directed to follow the *General City of Vancouver Guidelines for Archaeological Chance Find Management*. If archaeological materials are encountered or suspected during construction, the crew must immediately stop work in the immediate area and the Superintendent/Project Manager contact the Engineering Archaeologist for further direction

3. If the work site is not in an area of archaeological potential, the best practice is to follow the *General City of Vancouver Guidelines for Archaeological Chance Find Management*. If archaeological materials are encountered or suspected during construction, the crew must immediately stop work in the immediate area and the

Superintendent/Project Manager contact the Engineering Archaeologist for further direction

Construction Phase

Based on the outcome of the Project Planning Phase requirements above, there may be further archaeological resource management requirements for the project.

If no specific archaeological activities are identified for the proposed project, construction crews may rely on the *General City of Vancouver Guidelines for Archaeological Chance Find Management*. Under these guidelines, if known or suspected archaeological materials are encountered during the course of project activities, work in that area must immediately cease and contact should be made with the Engineering Archaeologist for further direction. Involved First Nations will be contacted at this time by Engineering Archaeologist.

Emergency Work

By its very nature, emergency work (e.g., broken watermain repair) is unpredictable and can have tight timelines to ensure public safety and minimize property damage and restore essential services. In all likelihood there will be a time delay between the emergency response and the completion of the HSIRF and the formal First Nation notification/referral processes. In these situations the Engineering Archaeologist will work with the Project Managers to notify and fulfill both First Nations and Provincial requirements. .

In these instances, time is of the essence and completion of the steps outlined above, need to be completed as quickly as possible after initiating the emergency response to minimize the chance of contravening the HCA and First Nations permits.

In those instances where the emergency work conflicts with a known archaeological site, the Engineering Archaeologist will work with involved First Nations and the Province to expedite issuance of the HCA and First Nations permits

For emergency work within a registered and regulated archaeological site; within 50 m of a registered and regulated archaeological site; or within an area archaeological management buffer; the Superintendent/Project Manager will:

1. Ensure public safety and minimize impacts:
    a. Take immediate steps to make the area safe with no impacts or minimized impacts to any known or suspected archaeological materials
    b. Contact the Engineering Archaeologist and await direction prior to resuming ground disturbance
    c. Support First Nations engagement and involvement
2. Plan permanent work with consideration of archaeological requirements:
    a. Complete appropriate sections of the HSIRF and submit to Engineering Archaeologist
    b. Ensure a response is received from Engineering Archaeologist and prepare for potential archaeological field work and First Nation involvement
    c. Advise Engineering Archaeologist of any follow-up work or long term work planned as an outcome of or response to the emergency work

A guideline for emergency procedures and key contacts during standard work hours and after-hours is located in the Heritage Sites Management for General Work and Emergency Work Protocol (VanDoc no. DOC/2019/064763).

VanMap Provincial Heritage Sites Map

The City of Vancouver maintains a Provincial Heritage Sites layer on VanMap. This layer is a direct representation of the Archaeology Branch's Remote Access to Archaeological Data (RAAD) online database of registered archaeological site locations. The VanMap layer also includes archaeological management buffers to further promote responsible heritage management in areas of archaeological or cultural sensitivity. This layer is intended to provide reference information to users to determine if their work site requires further archaeological review. The map layer contains sensitive information obtained through a data license agreement with the Province and shall be considered to be confidential.

1. Updated data from the RAAD web portal is downloaded every 3 to 6 months and the Provincial Heritage Sites layer on VanMap is updated accordingly.
2. Access to the Provincial Heritage Sites layer is restricted to select users only via layer password protection or user login requirements. Access to staff is provided on an as-requested/as needed basis to staff.
3. Staff that are provided access to the Provincial Heritage Sites layer are bound by the following use agreement: *"By being provided access to the VanMap Provincial Heritage Sites mapping layer, the user acknowledges that they will not share or distribute information contained within the layer that contains the locations of registered archaeology sites and that they will only utilize the information for the protection of those sites in relation to City construction work."*

REFERENCES

Heritage Site Information Review Form (HSIRF) process (VanDocs no. DOC/2017/118624)

Heritage Sites Management for General Work and Emergency Work Protocol (VanDoc no. DOC/2019/064763).

General City of Vancouver Guidelines for Archaeological Chance Find Management (VanDocs no. DOC/2016/289908)

APPROVAL HISTORY

ISSUED BY:	Engineering	**APPROVED BY:**	Cheryl Nelms	**DATE:**	Nov. 20, 2016
ISSUED BY:	Engineering	**APPROVED BY:**	Cheryl Nelms	**DATE:**	Jan 14, 2020

APPENDIX 18
ARCHAEOLOGY POLICY & PROCEDURE FOR HERITAGE SITES MANAGEMENT – SCENARIO B

See attached.

Archaeology Policy & Procedure for Heritage Sites Management – SCENARIO B

PLANNING & DESIGN PHASE

SCENARIO B

Ground disturbance in Project boundary within 50 to 200m of Pre-Contact Sites*

*with the exception of Special Management Zones

1. Project Manager (PM) submits the internal *Heritage Site Information Review Form* (HSIRF) (VanDocs no. DOC/2019/064760) to the Engineering Strategy and Standards (ESS) team that manages archaeological heritage sites (sze.kong@vancouver.ca; cc to: cael.hopwood@vancouver.ca; shauna.huculak@vancouver.ca); include the following key details:

- ❑ **Branch or work group name**
- ❑ **Project Manager**
- ❑ **Project Scope:** location, boundary, proposed timeline, preferred construction start date and ground disturbance activities including estimated depths
- ❑ **VanMap Provincial Heritage Sites layer screenshot including Project boundary**

2. PM receives completed internal *HSIR Form* from assigned ESS with recommendation. If the recommendation is to follow Chance Find Management (CFM) procedure, the following steps are to be followed in the event that archaeological materials or human remains are found. If additional archaeological work is recommended – see Scenario A for next steps or contact ESS for further support.

IMPLEMENTATION PHASE

FOUND ARCHAEOLOGICAL MATERIALS OR FEATURES

If known or suspected archaeological materials or features (either intact or disturbed) are encountered in the immediate vicinity

STOP CONSTRUCTION IN THE IMMEDIATE VICINITY

Is there a consulting archaeologist onsite?

YES

Immediately notify consulting archaeologist

Consulting archaeologist advises Superintendent / Site Supervisor on next steps

NO

Seek direction from Superintendent / Site Supervisor

Superintendent / Site Supervisor contacts the following for direction:

1) CoV Engineering Archaeologist
Shauna Huculak
778-787-2521

2) ESS
Cael Hopwood
604-763-1376

Operations crew to wait for instructions from Superintendent / Site Supervisor before resuming ground disturbing activities

FOUND HUMAN REMAINS

If human remains are (either intact or disturbed) encountered in the immediate vicinity

STOP CONSTRUCTION IN THE IMMEDIATE VICINITY

Secure and protect the area of the archaeological find and all excavated materials:

- All material excavated within the immediate vicinity must remain on site (including: material in dump trucks, hydro vac trucks and all sidecast material)
- Cover the finds and / or sidecast materials with a tarp / poly, if available
- Take care to not cause further disturbance to the find

Q: Is there a consulting archaeologist onsite?

YES

Immediately notify consulting archaeologist

Consulting archaeologist notifies the following and collaborates on next steps:

1) CoV Engineering Archaeologist
Shauna Huculak
778-787-2521

2) ESS
Cael Hopwood
604-763-1376

NO

Seek direction from Superintendent / Site Supervisor

Superintendent / Site Supervisor contacts the following for further direction:

1) CoV Engineering Archaeologist
Shauna Huculak
778-787-2521

2) **PM**

Operations crew to wait for instructions from Superintendent / Site Supervisor before resuming ground disturbing activities

FINAL STAGE & CLOSE-OUT PHASE

PM key tasks during final stage and close-out phase

- ❑ **PM** and ESS lead review draft archaeology reports in advance of FN review
- ❑ **PM** submits all final deliverables to ESS
- ❑ **PM** provides Lessons Learned feedback to ESS for continual improvements, when available
- ❑ **PM** provides evaluation of consulting archaeologist to ESS

VERSION:5

LAST UPDATE: May 2019

VanDocs no. DOC/2018/216316

PART D - FORM OF AGREEMENT

See attached.

STANDING OFFER AGREEMENT

THIS AGREEMENT is made as of the __ day of _____ (the "**Effective Date**")

BETWEEN:

CITY OF VANCOUVER
453 West 12th Avenue
Vancouver, British Columbia
V5Y 1V4

(the "**City**")

OF THE FIRST PART

AND:

CONTRACTOR NAME
address

(the "**Contractor**")

OF THE SECOND PART

(the City and the Contactor are hereinafter sometimes referred to individually as "**Party**" and collectively as "**Parties**")

BACKGROUND:

A. The Contractor submitted an application to the City in response to the City's RFA;

B. The Contractor's application has been accepted by the City and the contractor wishes to be included on the City's internal list of approved contractor service providers of civil/electrical services, who may be contracted by the City from time to time; and

C. The Contractor wishes to include the Contractor on such list so that the City may have the option of procuring such professional services from the Contractor from time to time, subject to the terms and conditions set out herein.

NOW THEREFORE, in consideration of the mutual covenants and promises made by the Parties and other good and valuable consideration, the receipt and sufficiency of which is hereby acknowledged, the Parties hereby agree as follows:

1.0 INTERPRETATION

1.1 In this Agreement, including the recitals, schedules and appendices to this Agreement, the following words and terms, unless the context otherwise requires, shall have the meanings set out below:

(a) "**Agreement**" means this Professional Services Agreement inclusive of all schedules, appendices, exhibits or other documents attached hereto or incorporated herein by reference, as amended from time to time;

(b) "**Applicable Laws**" means all statutes, regulations, by-laws, codes, rules, notices, orders, directives, standards and requirements of every competent federal, provincial, regional, municipal and other statutory authority applicable to the Contractor, any Sub-contractor and the Services, including the Vancouver Building By-law, the British Columbia Building Code, and the British Columbia Fire Code, all as may be in force from time to time;

(c) **"Application"** means the application submitted by the Contractor in response to the RFA, a copy of which is attached hereto, or incorporated by reference herein by operation of, Appendix C;

(d) "**City's Site**" means any land and/or premises owned by the City on which or in respect of which the Services are performed by the Contractor;

(e) "**City's Project Manager**" means the City's employee, or his/her delegate, who is authorized in writing to deal with the Contractor on behalf of the City in connection with the Services, or to make decisions in connection with this Agreement;

(f) **"Confidential Information"** has the meaning set out in Section 15.1

(g) "**Contract Document"** refers to each of the individual documents composing the Agreement, including this Professional Services Agreement (exclusive of the documents attached hereto or incorporated herein by reference) and each schedule, appendix, exhibit or other document attached to this Professional Services Agreement or incorporated into the Agreement by reference;

(h) "**Deliverables**" has the meaning set out in Section 17.1;

(i) **"GST"** means the tax payable and imposed pursuant to Part IX of the Excise Tax Act (Canada), as amended or replaced from time to time;

(j) "**Living Wage**" means the hourly wage established by the Living Wage Certifier from time to time during the Term, which includes: (i) direct wages; and (ii) the value of any non-mandatory benefits such as paid sick leave, employer-paid Medical Services Plan premiums and extended health benefits;

(k) "**Living Wage Certifier**" means the Living Wage for Families Campaign, any successor entity, or, in the event the Living Wage for Families Campaign ceases to carry on operations, such other living wage certification entity designated by the City to the Contractor in writing;

(l) "**Living Wage Employee**" means any and all employees of the Contractor and all Sub-contractors of the Contractor that perform any part of the Services on a property owned by or leased to the City, including all streets, sidewalks and other public rights of way, for at least one consecutive hour, but excluding Students, volunteers and employees of Social Enterprises;

(m) "**Project Team**" has the meaning set out in subsection 2.2(c);

(n) "**Proposal**" means the proposal submitted by the Contractor in response to the RFP, a copy of which is attached hereto, or incorporated by reference herein by operation of, Appendix B;

(o) "**PST**" means the provincial sales tax payable and imposed pursuant to the *Provincial Sales Tax Act* (British Columbia), as amended or replaced from time to time;

(p) "**Request for Service Agreement"** means a document substantially in the form of Appendix B setting out in relation to the particular Services to be provided thereunder;

i. the particular Services and Deliverables to be completed by the Contractor;

ii. the time schedule, including the Time(s) for Completion therefor;

iii. the Project Team therefor;

iv. any specific City Site therefor; and

v. the fees to be paid by the City therefor, including the Maximum Fees, Fixed Disbursement Amount and Maximum Fees and Disbursements (if any).

(q) "RFA" means Request for Applications PS20191847 'Civil/Electrical Contractor Services, together with all addenda and questions and answers attached hereto, or incorporated by reference herein by operation of, Appendix D;

(r) "**Services**" has the meaning set out in Section 2.1;

(s) "**Social Enterprise**" means a business that: (i) is owned by a non-profit organization or community services co-operative; (ii) is directly involved in the production and/or selling of goods and services for the combined purpose of generating income and achieving social, cultural, and/or environmental aims; and (iii) has a defined social and/or environmental mandate;

(t) "**Student**" means an individual who is enrolled in a school, college, university or other educational institution and is employed by the Contractor or a Sub-contractor, as the case may be, to obtain practical workplace experience as a requirement of or credit for their education;

(u) "**Sub-contractor**" has the meaning set out in Section 4.1; and

(v) "**Term**" means the term of this Agreement as specified in Section 12.1.

1.2 The Contract Documents are complementary and what is called for by any one will be as binding as if called for by all. In the event of any conflict or inconsistency between or among any of the

Contract Documents, the Contract Documents will be interpreted in the following order of priority, from highest to lowest:

(a) this Agreement, excluding Appendices B and C;

(b) any and all Term Agreements;

(c) the Application; and

(d) the RFA.

1.3 In this Agreement, including the recitals, schedules and appendices to this Agreement, except as expressly stated to the contrary or the context otherwise requires:

(a) the recitals and headings to sections, schedules and appendices are for convenience and reference only and will not affect the interpretation of this Agreement;

(b) the terms "this Agreement", "hereof", "herein", "hereunder" and similar expressions refer, unless otherwise specified or the context otherwise requires, to this Agreement taken as a whole (including any and all attached schedules and appendices) and not to any particular section, subsection or other subdivision;

(c) each reference to a statute is deemed to be a reference to that statute and any successor statute, and to any regulations, rules, policies and criteria made under that statute and any successor statute, each as amended or re-enacted from time to time;

(d) each reference to a rule, guideline, policy, regulation or directive is deemed to be a reference to any successor or replacement of such rule, guideline, policy, regulation or directive;

(e) words importing the singular include the plural and vice versa and words importing gender include all genders;

(f) references to time of day or date mean the local date or time in Vancouver, British Columbia;

(g) all references to money mean lawful currency of Canada;

(h) the word "written" includes printed, typewritten, faxed, e-mailed or otherwise capable of being visibly reproduced at the point of reception and "in writing" has a corresponding meaning; and

(i) the words "include" and "including" are to be construed as meaning "including, without limitation".

2.0 CONTRACTOR'S SERVICES TO THE CITY

2.1 The Contractor will provide and be fully responsible for the following services (the "**Services**"):

(a) the services described in each Request for Service Agreement, which services shall be consistent with the manner of providing the services described in the RFA and the Application; and

(b) all services not specifically included in subsections 2.1(a) and 2.1(b), but which are necessary or incidental to the completion of such other Services.

2.2 The City and the Contractor shall adhere to the following procedure in respect of specific Services:

(a) First, the City may identify a need for Services and, if it does so, it may complete a draft of the Request for Service Agreement and send the draft to the Contractor. The City will leave the fees blank, but may include proposed Maximum Fees, Fixed Disbursement Amount and Maximum Fees and Disbursements.

(b) Second, the Contractor, upon receipt of a draft Request for Service Agreement, shall promptly complete the fee provisions of the draft Request for Service Agreement (provided that the fee provisions must be completed consistently with the hourly rates set out in the Application), including any proposed modifications to the City's proposed Maximum Fees, Fixed Disbursement Amount and Maximum Fees and Disbursements, and otherwise amend and complete the Request for Service Agreement, have it executed on behalf of the Contractor, and return it to the City.

(c) Third, the City shall review Contractor's finalized Request for Service Agreement, including fees, and if it approves of the Request for Service Agreement, it shall have it executed on behalf of the City by the City's Project Manager and return it to the Contractor. If it does not approve, the City may in its discretion cease discussions with the Contractor in relation to the particular Services or request that the Contractor propose a varied Request for Service Agreement.

2.3 The City makes no representations, warranties or covenants hereunder respecting the volume of Services, if any, to be procured from the Contractor. This is not an exclusive agreement for the Services. The City may, at its discretion, procure the same or similar Services from any contractor pre-qualified under the RFA, or commence a new procurement to procure such Services.

2.4 The Contractor will be fully responsible for:

(a) coordinating the Services with the City's Project Manager, or his/her delegate, and ensuring that the performance of the Services does not adversely impact any design or construction schedule for any project or work and/or services provided by the City's other contractors, in each case to which the Services relate;

(b) taking all steps required in placing, effecting and maintaining insurance and providing evidence of insurance as set out in Appendix A – Insurance Requirements; and

(c) maintaining and supervising its employees and Sub-contractors (the **"Project Team"**) described in Section 3.1.

2.5 The Contractor represents and warrants to the City that the Contractor possesses the necessary skills, knowledge, qualifications and experience to perform the Services to the reasonable satisfaction of the City.

2.6 The Contractor will perform the Services:

(a) with that degree of care, skill and diligence normally applied in the performance of services of a similar nature and magnitude to those contemplated by this Agreement at the time and place the Services are rendered;

(b) in accordance with sound current professional practices and design standards; and

(c) in conformity with any and all Applicable Laws.

2.7 The Contractor will commence the Services promptly upon the execution of the Request for Service Agreement to which those Services relate and will use every reasonable effort to carry out the Services in accordance with:

(a) the requirements and appendices of this Agreement and the applicable Request for Service Agreement, or

(b) where no date is specified for the provision of any component of the Services by the applicable Request for Service Agreement, such completion dates as are reasonably specified from time to time by the City.

2.8 The Contractor will not permit, do or cause anything to be done at any time which could allow any lien, certificate of pending litigation, judgment or certificate of any court or any mortgage charge, conditional sale agreement, personal property security interest or encumbrance of any nature to be imposed or to remain on title to the City Site or any other City property.

3.0 PROJECT TEAM

3.1 Subject to Section 3.2, the Contractor will utilize only the Project Team members noted in the applicable Request for Service Agreement, which shall be consistent with the Application.

3.2 Except for substitutions required by circumstances not within its reasonable control, the Contractor may not make substitutions of Project Team members without the prior written consent of the City, which consent will not be unreasonably withheld, delayed or conditioned.

3.3 For the purposes of this Section 3, "substitutions required by circumstances not within its reasonable control" means substitutions required by virtue of illness, death, injury, pregnancy, medical leave, or termination of employment or contract, but expressly excludes situations where the Project Team member is called upon to perform services for another client of the Contractor, its Sub-contractor or their affiliates.

3.4 The City may, with stated reasons and acting reasonably, request that the Contractor replace a Project Team member. The Contractor will, subject to scheduling and staffing considerations, make commercially reasonable efforts to replace the individual with someone of substantially similar competency and experience.

3.5 Regardless of whether or not the City consents to a substitution, or requests a substitution, the City will not be liable to pay additional compensation to the Contractor for any replacement Project Team member.

3A Living Wage

3A.1 Subject to Section 3A.2, it is a condition of this Agreement that, for the duration of the Term, the Contractor pays all Living Wage Employees not less than the Living Wage.

3A.2 Notwithstanding Section 3A.1, the Contractor has up to 6 months from the date on which any increase in the Living Wage is published by the Living Wage Certifier to increase wages for all Living Wage Employees such that all Living Wage Employees continue to be paid not less than the Living Wage.

3A.3 The Contractor shall ensure that the requirements of Section 3A.1 apply to all Sub-contractors.

3A.4 A breach by the Contractor of its obligations pursuant to Sections 3A.1 and 3A.3 shall constitute a material breach by the Contractor of this Agreement that shall entitle the City to terminate this Agreement with immediate effect if the Contractor has not remedied such breach within the time period specified by the City in writing to the Contractor.

3A.5 The Contractor shall maintain up-to-date records and accounts which clearly document its satisfaction of the requirements of this Article 3A and shall make the same available to the City upon request. The City may request copies of all such records and accounts which shall be provided to the City by the Contractor (subject to reimbursement of the Contractor's reasonable copying costs and any other direct costs and expenses, if any) at any time prior to the expiry of 365 days after completion of all of the Services or earlier termination of this Agreement. For avoidance of doubt, any records and accounts provided by the Contractor in accordance with this Section 3A.5 shall be deemed to be Confidential Information.

3A.6 The Contractor shall prepare and submit to the City in a format reasonably acceptable to the City before January 31 of each calendar year of the term or, for each partial calendar year of the term, within 30 days of the expiry of the term a living wage report setting out:

(a) the number of Living Wage Employees of the Contractor and each Sub-contractor who were paid a Living Wage pursuant to this Section 3A during the previous calendar year or portion thereof that would not have received a Living Wage for substantially similar work but for the obligations of the Contractor pursuant to this Section 3A; and

(b) the total incremental costs incurred by the Contractor, including any amounts paid to Sub-contractors, in order to fulfill its obligations pursuant to this Section 3A to pay a Living Wage to the Living Wage Employees described in Section 3A.6(a).

4.0 SUB-CONTRACTORS

4.1 The Contractor may not engage any contractor or Contractor (in each case a "Sub-contractor") for the performance of any part of the Services, unless the Sub-contractor is one of the City's pre-qualified firms, or the Contractor has first obtained the written consent of the City, which consent may be arbitrarily withheld.

4.2 The Contractor will administer, coordinate, and manage all Services provided by any Sub-contractors, and will assume full responsibility to the City for all work performed by the Sub-contractors in relation to the Services and will pay all fees and disbursements of all Sub-contractors, subject to reimbursement by the City where the City has expressly agreed in this Agreement that such reimbursement is to be separate from and additional to the fees and disbursements payable to the Contractor.

4.3 Where a Sub-contractor is used by the Contractor under this Agreement, the Contractor will legally bind the Sub-contractor to comply with this Agreement.

4.4 Nothing in this Agreement will create any contractual relationship between a Sub-contractor and the City.

5.0 BASIS OF PAYMENT TO THE CONTRACTOR

5.1 In consideration of the Services performed by the Contractor to the satisfaction of the City and in strict conformity with the terms hereof, the City will pay the Contractor the fees and reimbursable expenses prescribed herein, plus GST and PST as applicable to the sale made to the City hereunder.

5.2 Subject to Section 5.3, payment to the Contractor will be based on hours worked by employees of the Contractor or by the Sub-contractors multiplied by the applicable hourly charge-out rates stated in the Application.

5.3 If there are maximum, lump sum or other limiting amounts for fees or disbursements indicated herein for the Services or for portions thereof, then notwithstanding anything to the contrary in this Agreement the maximum fees or disbursements to be paid by the City to the Contractor for the Services or such portions of the Services will not exceed those stated amounts, except as mutually agreed in writing. Any limit on the fees or disbursements to be paid by the City to the Contractor will in no way diminish the duties and obligations of the Contractor to provide the Services covered by this Agreement.

5.4 Subject to any "Fixed Disbursement Amount" defined herein, or any other limit on disbursements stated herein, the City will reimburse the Contractor for disbursements reasonably incurred by the Contractor in the performance of the Services. Reimbursement of these expenses by the City will be at actual cost without any addition for overhead or profit.

5.5 If the Contractor has engaged Sub-contractors, then the Contractor will make full payment to said Sub-contractors for work performed in relation to the Services. [Subject to any "Fixed Disbursement Amount" defined herein, or any other limit on disbursements stated herein, the City will reimburse the Contractor for payments made to Sub-contractors at amounts equal to such actual payments without any additions for overhead and profit to the Contractor.

5.6 The Contractor will, by the 25th day of each month, provide to the City's Project Manager a draft invoice with an attached detailed account of all charges to be claimed by the Contractor for the preceding month (if any). The City's Project Manager shall review the draft, raise any concerns with the Contractor within ten working days and, after settlement of any issues (in the City's Project Manager's discretion), approve the draft invoice. The Contractor, if so requested, will meet with the City's Project Manager to expedite and settle of the draft invoice. The Contractor will submit its final invoice, as per the approved draft invoice, to the City of Vancouver, Attention: Accounts Payable, by email to APInvoice@vancouver.ca. The invoice must contain:

(a) the Contractor's name, address and telephone number;

(b) the City purchase order number;

(c) the name of the City's Project Manager;

(d) the invoice number and date;

(e) details of any applicable taxes (with each tax shown separately); and

(f) tax registration number(s).

5.7 If the City does not approve of or wishes to further review, audit or otherwise seek clarification concerning any of the Contractor's invoices, for whatever reason, the City will not be liable for interest charges in respect of that invoice for the period from the date the invoice is submitted

until the date that the invoice is paid, provided however, the City will use reasonable efforts to have the review, audit or clarification resolved within a 60 day period. The City will, if it approves the amount of such invoice, cause the respective invoice to be paid within 30 days of approval by electronic funds transfer to the bank account indicated by the Contractor.

5.8 The Contractor will keep proper accounts and records of all costs and expenditures forming the basis of any billing to the City, including but not limited to hours worked, details of all disbursements and percentage amounts of work completed. The City will be entitled to verify the accuracy and validity of all billings and payments made by auditing and taking extracts from the books and records of the Contractor and by such other means as will be reasonably necessary or advisable.

5.9 The Contractor shall provide bank account information to the City to enable the City to make payments by electronic funds transfer, as contemplated hereby.

6.0 CHANGES TO SCOPE OF SERVICES

6.1 The City's Project Manager may, from time to time and at any time on prior written notice to the Contractor, vary the scope of Services to be provided by the Contractor. In that case and where this Agreement contains delivery dates and/or limits as to fees or disbursements (or a defined "Maximum Fees and Disbursements") for all or any part of the Services, such delivery dates and/or limits will be adjusted as agreed to by both Parties in writing, and failing agreement, as reasonably determined by the City's Project Manager.

6.2 Should the Contractor consider that any request or instruction from the City's Project Manager constitutes a change in the scope of Services, the Contractor will provide the City's Project Manager with notice in writing within ten days of such request or instruction. If the Contractor does not deliver written notice to the City within the time period specified, the City will not be obligated to make any payments of additional fees, disbursements or out of pocket expenses to the Contractor.

6.3 The City's Project Manager will consider the Contractor's written notice (if any) within a further ten days of receipt of the Contractor's notice and determine and advise as to whether the request constitutes a change in the scope of the Services and, if necessary, the method by which the variation will be scoped and reimbursed.

7.0 RELEASE AND INDEMNIFICATION

7.1 The Contractor now releases the City, its officials, officers, employees and agents from all costs, losses, damages and expenses, including those caused by personal injury, death, property damage, loss and economic loss arising out of, suffered or experienced by the Contractor, its Sub-contractors, and their respective officers, employees and agents in connection with their performance of the Services under this Agreement.

7.2 Despite any insurance coverage of the City, the Contractor hereby agrees to indemnify and save harmless the City of Vancouver and its successors, assigns, official, employees, agents and authorized representatives and each of them (in each case an "**Indemnified Party**") from and against all costs, losses, claims, damages, actions, and causes of actions (collectively referred to as "**Claims**") that an Indemnified Party may sustain, incur, suffer or be put to at any time either before or after the expiration or termination of this Agreement, that arise out of errors, omissions or negligent acts of the Contractor, its Sub-contractors, or their respective officers, employees or

agents under this Agreement excepting always that this indemnity does not apply to the extent, if any, to which the Claims are caused by errors, omissions or negligent acts of an Indemnified Party.

7.3 This indemnity will not affect or prejudice the City from exercising any other rights that may be available to it at law or in equity.

7.4 The release and indemnity set out above will survive the expiry or sooner termination of this Agreement.

8.0 INSURANCE

8.1 The Contractor will comply with the insurance requirements set out in Appendix A – Insurance Requirements.

9.0 WORKSAFEBC

9.1 The Contractor agrees that it will procure and carry and pay for, full WorkSafeBC coverage for itself and all workers, employees, servants and others engaged in or upon any work or service which is the subject of this Agreement. The Contractor agrees that the City has the unfettered right to set off the amount of the unpaid premiums and assessments for such WorkSafeBC coverage against any monies owing by the City to the Contractor. The City will have the right to withhold payment under this Agreement until the WorkSafeBC premiums, assessments or penalties in respect of work done or service performed in fulfilling this Agreement have been paid in full.

9.2 The Contractor will provide the City with the Contractor's and each Sub-contractor's WorkSafeBC registration number and clearance letters from WorkSafeBC confirming that the Contractor and each Sub-contractor are registered in good standing with WorkSafeBC and that all assessments have been paid to the date thereof prior to the City having any obligation to pay monies under this Agreement. The Contractor will indemnify the City and hold harmless the City from all manner of claims, demands, costs, losses, penalties and proceedings arising out of or in any way related to unpaid WorkSafeBC assessments owing from any person or corporation engaged by the Contractor in the performance of this Agreement or arising out of or in any way related to the failure to observe safety rules, regulations and practices of WorkSafeBC, including penalties levied by WorkSafeBC.

9.3 Whenever the Contractor is required or permitted to perform any Services on any City sites, the Contractor is now appointed and now accepts appointment as the "prime contractor" (as defined in the WorkSafeBC regulations) in connection with such Services.

10.0 CITY INFORMATION/APPROVALS

10.1 No reviews, approvals or inspections carried out or information supplied by the City will derogate from the duties and obligations of the Contractor (with respect to designs, reviews, inspections, approvals or otherwise), and all responsibility related to the Services will be and remain with the Contractor. For greater certainty, any information provided by the City to the Contractor, whether under the RFP or under this Agreement, including any studies, reports, plans, drawings, or specifications, is provided to the Contractor for information purposes only and may not be relied upon by the Contractor.

11.0 COMMUNICATION BETWEEN CONTRACTOR AND CITY

11.1 The City appoints **[insert name] [email address]** as the City's Project Manager for the purposes of this Agreement.

In the event of the revocation in writing of **[insert name]**'s appointment as the City's Project Manager by the City, **[insert name]** will have no further authority under this Agreement, except as may be specifically designated in writing by the City and agreed to in writing by **[insert name]**, and all references to the City's Project Manager in this Agreement will thereafter be deemed to be a reference to the City or to such other person designated in writing by the City to the Contractor.

The City's Project Manager may from time to time delegate to a representative the performance of or the authority to perform the duties, responsibilities, rights and obligations of the City in respect of which the City's Project Manager has been designated and appointed its sole and exclusive agent.

11.2 The Contractor appoints **[insert name] [email address]** as its representative for the purposes of this Agreement (the "**Contractor's Project Manager**").

11.3 Unless otherwise agreed to in writing by the Parties, all material communication between the Contractor and the City regarding this Agreement, including performance of the Services, will be between the City's Project Manager and the Contractor's Project Manager.

12.0 TERM OF AGREEMENT

12.1 This Agreement will commence on the Effective Date and will expire on the later of: (i) the third anniversary of the Effective Date; and (ii) if there are Services ongoing pursuant to a Request for Service Agreement on the **third** anniversary of the Effective Date, the date on which those Services have been completed by the Contractor (the "**Term**").

13.0 TERMINATION

13.1 The City at any time, in its sole judgment, may, whether or not cause exists, terminate the services of the Contractor in whole or in part by giving ten days' prior written notice to the Contractor. If termination is not for cause, the Contractor will be paid for all Services properly performed to the date of the delivery of the said notice (subject to the terms of this Agreement) plus all necessary and reasonable wind-up costs incurred, if any, in closing out the Services or the part terminated.

13.2 Despite Section 13.1, in no event and under no circumstances will the Contractor's "necessary and reasonable wind-up costs incurred" pursuant to Section 13.1 exceed **$100** (including all taxes).

14.0 ASSIGNMENT

14.1 The Contractor will not assign this Agreement in whole or in part except with the prior written consent of the City, which consent will not be unreasonably withheld, delayed or conditioned. Any attempt to assign this Agreement without such consent will be void and of no effect. However, the Contractor will be permitted to assign this Agreement to any entity into, by or with which the business or assets of the Contractor have been merged, acquired, consolidated or re-organized, or any entity which purchases all or substantially all of the business or assets of the Contractor, provided always that the Contractor first provides the City with:

(a) reasonable particulars of the transaction (permitting the City to independently verify the nature of the transaction); and

(b) a legally enforceable covenant from the new entity confirming that it is legally bound to the City to perform this Agreement.

15.0 CONFIDENTIALITY

15.1 In the course of or for the purpose of performing the Services, the Contractor will obtain or have access to information, including but not limited to technical information, financial information and business information, which is confidential to the City, and is the exclusive, world-wide property of the City and/or its suppliers and customers (collectively "**Confidential Information**"). Excluded from the definition of Confidential Information is:

(a) information which is in, or becomes part of, the public domain, not due to the Contractor's breach of this Agreement or the Contractor's actions;

(b) information which was previously in the Contractor's possession and did not originate from the City; and

(c) information which lawfully becomes available to the Contractor from a third party not under an obligation of confidence to the City regarding such information.

15.2 The Contractor will not use or reproduce the Confidential Information other than as reasonably required for the performance of the Services under this Agreement. The Contractor will not, without the prior written consent of the City given on such terms and conditions as it prescribes in its sole discretion, disclose or allow access to the Confidential Information to any person, except to only those of its own employees who have a need to know the Confidential Information solely for the provision of the Services, and who have been advised of its confidential nature and have agreed to be bound by the confidentiality and use-restriction provisions in this Section 15.0. The Contractor will take all reasonable precautions against the Confidential Information being used by or disclosed to any unauthorized person.

15.3 If the Contractor is required by any law, legal proceeding, or court or government order, to disclose any Confidential Information, the Contractor shall limit its disclosure of such Confidential Information to the extent and purpose legally required, provided that prior to any disclosure the Contractor will promptly notify the City in writing of the existence and the terms, and conditions of the required disclosure and, at the City's request and expense, co-operate in obtaining a protective order or other assurance that confidential treatment and restrictions on use will be accorded such Confidential Information.

15.4 The City is subject to the *Freedom of Information and Protection of Privacy Act* (British Columbia), which imposes significant obligations on the City's contractors to protect all personal information acquired from the City in the course of providing services to the City. The Contractor confirms and acknowledges its obligations to comply with all obligations imposed on it pursuant to the *Freedom of Information and Protection of Privacy Act* (British Columbia) with respect to all personal information received from the City whether as part of the Confidential Information or otherwise.

15.5 The Contractor acknowledges that in the event of a breach by the Contractor or any of its employees of their respective confidentiality obligations pursuant to this Section 15.0, damages alone would not be an adequate remedy. The Contractor therefore agrees with the City that, in addition to and without limiting any other right or remedy it may have, the City will have the right

to an immediate injunction or other available equitable relief in any court of competent jurisdiction enjoining any threatened or actual breach of such obligations.

15.6 The Contractor shall return all copies of the Confidential Information to the City, in all tangible forms and media, and delete all Confidential Information resident in any databases or systems, upon the earliest of the following dates:

(a) completion of the Services;

(b) expiration or earlier termination of this Agreement; and

(c) written request of the City for return of the Confidential Information;

provided that the Contractor shall have the right to retain one copy of the Confidential Information solely for archival purposes or as otherwise may be required by law, subject to its ongoing confidentiality and restricted use obligations.

15.7 This Section 15.0 shall survive the expiration or earlier termination of this Agreement.

16.0 NO PROMOTION OF RELATIONSHIP

16.1 The Contractor will not disclose or promote its relationship with the City, including by means of any verbal declarations, announcements, sales, marketing or other literature, letters, client lists, websites, internet domain names, press releases, brochures or other written materials (the "**Communications**") without the express prior written consent of the City (except as may be necessary for the Contractor to perform its obligations under this Agreement).

16.2 Furthermore, the Contractor undertakes and will cause all of its Sub-contractors to undertake not to disclose or promote its relationship with the City in any Communications in a manner which could suggest or create an association, express or implied, between the Contractor and the City. Without limiting the generality of the foregoing, the Contractor will not refer to or use any website, domain name, official emblem, logo or mascot of the City of Vancouver in any Communications, without the express prior written consent of the City.

17.0 DELIVERABLES

17.1 As a result of or as part of providing the Services, the Contractor may receive, create, produce, acquire or collect one or more of the following:

(a) products, goods, equipment, supplies, models, prototypes and other materials;

(b) information and data;

(c) reports, drawings, plans, designs, depictions, specifications and other documentation; and

(d) any other items identified in this Agreement as deliverables;

(collectively, the "**Deliverables**").

17.2 Deliverables are deemed not to include:

(a) any item not required to be produced by the Contractor or supplied to the City as part of or together with the Services, provided that if the City has paid or is liable to pay for any

portion of such item's creation, production, acquisition or collection then such item shall be deemed to be a Deliverable;

(b) any item produced as a result of the Services, which is specified in this Agreement as being excluded from the Deliverables category; and

(c) any item which pre-existed the effective date of this Agreement, that is owned by a third party or that is used by the Contractor as part of the services provided to any of its other customers (the "**Pre-Existing Materials**").

17.3 All Deliverables will be owned solely by the City unless otherwise expressly provided herein. The City shall have the complete and unfettered right to use and deal with the Deliverables for its own benefit in any way it sees fit without limitation, and without accounting in any way to the Contractor.

17.4 The Contractor will keep accurate records and provide regular reports to the City about the Deliverables as they are created or acquired, and grant to the City access to the Deliverables at all times on reasonable notice. The Contractor will treat each Deliverable as subject to the confidentiality provisions set out in Section 15.0 unless advised otherwise by the City.

17.5 Each Deliverable, as to the whole or that portion of the Deliverable then existing, will be delivered by the Contractor to the City on the earliest of each of the following events:

(a) the date specified in this Agreement for the delivery of such Deliverable;

(b) immediately on the date of expiration or sooner termination of this Agreement; or

(c) the date specified by written notice of the City requesting delivery of all or any part of the Deliverable.

17.6 The Contractor transfers to the City, free of all liens and encumbrances, ownership of each Deliverable, and assigns all of its world-wide present and future rights, title and interest in and to each Deliverable, including copyright, effective as of the date of creation or acquisition of such Deliverable by the Contractor. The Contractor irrevocably waives, in favour of the City, all moral rights in the Deliverables. The Contractor will obtain from its employees and any independent contractors, all required assignments and releases of intellectual property, and waivers of moral rights, in the Deliverables. The Contractor will not assert any rights to or interests in, or apply for or register any copyright or other rights or interests in, the Deliverables, or assist any other person in doing so. The Contractor shall provide to the City, during and after the term of this Agreement, any reasonable assistance required for the City to obtain, perfect and enforce its ownership of and rights in the Deliverables, including without limitation execution of assignments and transfers of the Deliverables. This Section does not apply to Pre-Existing Materials.

17.7 The Contractor will not incorporate any Pre-Existing Materials in any Deliverable without first:

(a) advising the City, in writing, of the nature of the Pre-Existing Materials and their proposed use and obtaining the City's written consent to do so;

(b) acquiring from each third-party owner of such Pre-Existing Materials, a fully paid-up, perpetual, non-exclusive license, in writing, for the City to use the Pre-Existing Materials as part of the Deliverable; and

(c) granting, in writing, to the City with respect to such Pre-Existing Materials that the Contractor owns, a fully paid-up, perpetual, non-exclusive license to use the Pre-Existing Materials as part of the Deliverable.

17.8 The Contractor represents and warrants that the Deliverables will not infringe, misappropriate or misuse any copyright, patent, trade-mark, trade secret, or confidential or proprietary information of a third party. The Contractor shall defend, indemnify and hold the City harmless from and against any and all damage, liability, cost and expense incurred by the City in connection with any claim by a third party that a Deliverable infringed, misappropriated or misused its copyright, patent, trade-mark, trade secret, or confidential or proprietary information.

18.0 NOTICES

18.1 Any notice required or permitted to be given to the Contractor will be sufficiently given if delivered in writing by the City's Project Manager to the Contractor's Project Manager personally or, if mailed, by registered mail to the last known address of the Contractor.

18.2 Any notice required or permitted to be given to the City will be sufficiently given if delivered in writing by the Contractor's Project Manager to the City's Project Manager personally or, if mailed, by registered mail to City of Vancouver at 453 West 12th Avenue, Vancouver, B.C., V5Y 1V4 (addressed to the attention of the City's Project Manager).

19.0 NO CONFLICT OF INTEREST

19.1 The Contractor agrees that during the Term the Contractor will not engage in any conduct which would or might put the interests of the City into conflict with the interests of any other person, whether or not a client of the Contractor's. Without limiting the general scope of this Section 19.1 and by way of example only, the Contractor is prohibited from and will not provide any services which assist or could be seen to be assisting any person in responding to a request for proposal or invitation to tender, or otherwise giving that person an unfair competitive advantage over other proponents or tenderers responding to a request for proposal or invitation to tender by the City. The Contractor now acknowledges that a breach of this Section 19.1 could constitute not only a breach of this Agreement but also a violation of the *Competition Act* (Canada) and *Criminal Code* of Canada, and accordingly, could be punishable as a crime (as well as a breach of contract).

19.2 The Contractor now confirms and warrants that there is no officer, director, shareholder, partner or employee or other person related to the Contractor's organization (a "**person having an interest**") or any spouse, business associate, friend or relative of a person having an interest who is:

(a) an elected official or employee of the City; or

(b) related to or has any business or family relationship with an elected official or employee of the City, such that there would be any conflict of interest or any appearance of a conflict of interest in the administration of this Agreement or the performance of the Services.

20.0 NON-RESIDENT WITHHOLDING TAX

20.1 If the Contractor is a non-resident of Canada as defined in Canadian income tax legislation, the City may withhold from all monies payable under this Agreement such amounts as set out in Canadian income tax legislation, unless a Canada Revenue Agency waiver has been provided to the

City within the time limit required under the Canada Revenue Agency administrative guidelines as in effect from time to time and, in any event, prior to payment of an invoiced amount.

20.2 The City shall receive full credit under this Agreement for monies withheld as of and from the date of the withholding and no interest will be payable by the City on sums withheld and later paid directly to the Contractor.

20.3 The Contractor shall indemnify the City for any losses, damages or expenses incurred by the City as a result of the Contractor's failure to properly disclose to the City its non-resident status, as defined in Canadian income tax legislation.

21.0 COMPLIANCE WITH LAW

21.1 The Contractor will comply with the City of Vancouver License By-law and maintain a valid business license throughout the duration of this Agreement.

21.2 The Contractor agrees that it will during the Term comply with all Applicable Laws.

22.0 GOVERNING LAW AND RESOLUTION OF DISPUTES

22.1 This Agreement will be governed by the laws of the Province of British Columbia and the courts of British Columbia will have exclusive jurisdiction to determine all disputes arising under this Agreement and the Parties now irrevocably agree to submit all disputes to the courts of British Columbia for resolution.

23.0 INDEPENDENT CONTRACTOR

23.1 This Agreement is a contract for services and the Contractor, its permitted Sub-contractors, and the officers, directors, shareholders, partners, personnel, affiliates and agents of the Contractor and its permitted Sub-contractors are not, nor are they to be deemed to be, partners, appointees, employees or agents of the City.

23.2 The Contractor will not represent to anyone that the Contractor has any authority to bind the City in any way or that the Contractor is an employee or agent of the City.

24.0 INDEPENDENT LEGAL ADVICE

24.1 The Contractor acknowledges that the Contractor has been given the opportunity to seek independent legal advice before executing this Agreement.

25.0 TIME FOR PERFORMANCE

25.1 **Time of the Essence**. Time shall be of the essence of this Agreement.

25.2 **Unavoidable Delay**. Notwithstanding Section 25.1, except for the performance of obligations to pay money, the time periods for the City and the Contractor to perform under this Agreement will be extended for periods of time during which their performance is delayed or prevented due to an Unavoidable Delay. For the purposes of this Section, an "**Unavoidable Delay**" means any circumstances beyond the reasonable control of the party trying to perform (such as, for example, acts of God, war or other strife or governmental action) but expressly excludes any and all delays caused by the Contractor's lack of financial resources; the Contractor's insolvency ; strikes, lockouts or other withdrawals of services arising out of any labour dispute involving the City, the Contractor or a Sub-contractor; or governmental action taken in the enforcement of any law

specifically against the Contractor or its Sub- Contractors. If an Unavoidable Delay occurs, the non-performing party will, as soon as possible after the occurrence of the Unavoidable Delay, give written notice to the other party describing the circumstances preventing continued performance and the efforts being made to resume performance of its obligations under this Agreement.

26.0 GENERAL

26.1 **No Waiver.** No action or failure to act by the City shall constitute a waiver of any right or duty under this Agreement, or constitute an approval or acquiescence in any breach hereunder, except as may be specifically agreed in writing by the City.

26.2 **Severability.** The invalidity, illegality or unenforceability of any portion or provision of this Agreement or the occurrence of any event rendering any portion or provision of this Agreement void shall in no way affect the validity or enforceability of any other portion or provision of this Agreement. Any void portion or provision shall be deemed severed from this Agreement and the balance of this Agreement shall be construed and enforced as if this Agreement did not contain the particular portion or provision held to be void. The Parties further agree to amend this Agreement to replace any stricken provision with a valid provision that comes as close as possible to the intent of the stricken position.

26.3 **Remedies Cumulative**. The remedies of the Parties provided for in this Agreement are cumulative and are in addition to any remedies available to the Parties at law or in equity. No remedy will be deemed to exclude or restrict the right of a Party to any other remedies against the other Party and a Party may from time to time have recourse to one or more of the remedies specified in this Agreement or at law notwithstanding the termination of this Agreement.

26.4 **Further Assurances**. Each Party shall execute such further and other documents and instruments and do such further and other acts as may be necessary to implement and carry out the provisions and intent of this Agreement.

26.5 **Entire Agreement**. The Contract Documents constitute the entire agreement between the Parties with respect to the subject matter hereof, and supersede all previous communications, representations and agreements, whether oral or written, with respect to the subject matter hereof.

26.6 **Amendment**. This Agreement shall not be amended except as specifically agreed in writing by both the City and the Contractor.

26.7 **Joint and Several Liability of Joint Venture Participants**. If the Contractor is a joint venture of two or more entities, it is understood and agreed that the grants, covenants, provisos, claims, rights, powers, privileges and liabilities of the entities who comprise the Contractor shall be joint and several.

26.8 **Schedules and Appendices**. The schedules and appendices attached hereto are incorporated by reference in and form an integral part of this Agreement.

26.9 **Set-Off**. The City may at its option, withhold and set-off against any amount owing to the Contractor (whether under this Agreement or otherwise) any amounts payable by the Contractor to the City (whether under this Agreement or otherwise) and the amount of any damages suffered or claims made or to be made by the City as a result of any other claim it may have against the Contractor, whether such claim is at law or in equity or tort or on any other basis.

26.10 **Enurement**. This Agreement shall enure to the benefit of and be binding upon the City and the Contractor and their respective successors and permitted assigns.

26.11 **Execution**. This Agreement may be executed in one or more counterparts each of which will constitute an original and together will constitute one and the same Agreement. This Agreement may be executed by the Parties electronically or by facsimile and if so executed and transmitted, this Agreement will be for all purposes as effective as if the Parties had delivered an executed original Agreement.

As evidence of their agreement to be bound by the above contract terms, the City and the Contractor each have executed this Agreement as of the day and year first above written.

CITY OF VANCOUVER

_____

Authorized Signatory

_____

Print Name and Title

NAME OF CONTRACTOR

_____

Authorized Signatory

_____

Print Name and Title

APPENDIX A - INSURANCE REQUIREMENTS

A1.1 **Required Types/Amounts** Prior to commencing the Services, the Contractor will obtain at its own expense:

(a) a professional (errors and omissions) liability insurance policy with limits of not less than $2,000,000 per claim and not less than $2,000,000 in aggregate and a deductible of not more than $50,000, protecting the Contractor against all claims for loss or damage arising out of any error or omission of the Contractor or the Contractor's personnel in the performance of the Services; and

(b) a commercial general liability insurance policy with a limit of not less than $5,000,000 per occurrence, and a deductible of not more than $5,000, protecting the Contractor and the Contractor's personnel against all claims for personal injury, including death and bodily injury, and property damage or loss, arising out of the operations of the Contractor or the actions of the Contractor or the Contractor's personnel. The policy must contain a cross-liability clause in favour of the City and will name the City and the City's officials, employees and agents as additional insureds.

A1.2 **Required Policy Terms**

All required insurance policies must remain in full force and effect at all times until completion of the Services or earlier cancellation of this Agreement, and for a period of not less than two years thereafter, and must:

(a) be obtained from and issued by insurers authorized to carry on business within British Columbia, on terms satisfactory to the City's Director of Risk Management, acting reasonably;

(b) be primary insurance in respect to the City, and any insurance or self-insurance maintained by the City will be in excess of this insurance and will not contribute with such policies; and

(c) contain a provision that such insurance coverage will not be cancelled without the insurer giving the City at least 30 calendar days' prior written notice,

and, for any property insurance carried by the Contractor, contain a clause that waives the insurer's right of subrogation against the City and the City's officials, employees and agents.

A1.3 **Insurance Certificate**

Prior to signing, and immediately following the signature of, this Agreement, the Contractor shall have provided, or shall provide, the City's Project Manager with evidence of all required insurance to be taken out in the form of one or more certificate(s) of insurance. The certificate(s) of insurance will identify the Agreement title, number, policyholder and scope of work and must not contain any qualifications or disclaimers. Proof of insurance, in the form of such certificate(s) of insurance (or copies of the policy(ies) themselves, if requested), will be made available to the City's Project Manager at any time during the performance of the Services immediately upon request.

A1.4 **Sub-Contractors' Insurance**

The Contractor will provide in its agreements with its Sub-contractors insurance clauses in the same form as in this Agreement. Upon request, the Contractor will deposit with the City's Project Manager detailed certificates of insurance for the policies of its Sub-contractors (or copies of the policy(ies) themselves, if requested) and a copy of the applicable insurance clauses from its Sub-contractor agreements.

A1.5 **Insurance Requirements Additional to any other Requirements**

The Contractor and each of its Sub-contractors will provide, at its own cost, any additional insurance which it is required by law to provide or which it considers necessary.

A1.6 **Insurance Requirements Independent of Agreement Obligations**

Neither the providing of insurance by the Contractor or the Sub-contractors in accordance with this Agreement, nor the insolvency, bankruptcy or the failure of any insurance company to pay any claim accruing, will be held to relieve the Contractor from any other provisions of this Agreement with respect to liability of the Contractor or otherwise.

APPENDIX B

FORM OF REQUEST FOR SERVICE AGREEMENT

REQUEST FOR SERVICE AGREEMENT

THIS TERMS AGREEMENT is made as of <>, 20<>

BETWEEN:

<CONTRACTOR NAME>, a <corporation> organized under the laws of <> and having an office at <>

(hereinafter referred to as the "**Contractor**")

AND:

CITY OF VANCOUVER, a municipal corporation continued under the *Vancouver Charter* (British Columbia) and having an office at 453 West 12th Avenue, Vancouver, British Columbia, V5Y 1V4

(hereinafter referred to as the "**City**")

PURSUANT AND SUBJECT TO that certain Professional Services Standing Offer Agreement between the Contractor and the City dated as of <> (the "**Agreement**").

1. Capitalized terms used herein but not defined herein have the respective meanings ascribed thereto in the Agreement.

2. The Services to which this Terms Agreement applies, and the Deliverables to be delivered by the Contractor in relation thereto are the following:

SPECIFIC WORK AND DELIVERABLES:

SCHEDULE AND TIME(S) FOR COMPLETION:

[NOTE: Describe above the time for the completion of the Services and any applicable milestones to be achieved by particular dates prior to the completion of the Services.]

PROJECT TEAM:

[NOTE: List project team for the Services, if applicable. If none, write "None".]

APPROVED SUBCONTRACTORS:

[NOTE: List approved subcontractors. If none, write "None".]

City Site(s):

[Insert City properties at which the Services will be performed. If none, write "None"].

In undertaking the Services, the Contractor acknowledges that the Contractor has inspected the above City Site(s), agrees to accept the City Site(s) "as-is" and undertakes to take all precautions necessary to ensure the safety of all persons employed or contracted by the Contractor to perform the Services set out in this Terms Agreement.

FEES:

[Insert fees for Services described in this Terms Agreement. Delete below provisions if not applicable.]

Notwithstanding anything to the contrary contained in the Agreement, save as otherwise mutually agreed in writing subsequent to the date of this Terms Agreement (or pursuant to Section 6.0 of the Agreement), the total professional fees payable to the Contractor for the Services set out in this Terms Agreement (not including GST AND PST or disbursements) will not exceed $**[insert amount]**. (the "**Maximum Fee**").

Notwithstanding anything to the contrary contained in the Agreement, save as otherwise mutually agreed in writing subsequent to the date of this Terms Agreement (or pursuant to Section 6.0 of the Agreement), the total disbursements for which the City will reimburse the Contractor in respect of the Services set out in

this Terms Agreement will not exceed $**[insert amount]** (the "**Fixed Disbursement Amount**").

Notwithstanding anything to the contrary contained in the Agreement, save as otherwise mutually agreed in writing subsequent to the date of this Terms Agreement (or pursuant to Section 6.0 of the Agreement), the maximum liability of the City in respect of the Services set out in this Terms Agreement (the "**Maximum Fees and Disbursements**") will be $**[insert amount]**, plus GST and PST as applicable to the sale made to the City hereunder.

The above amounts are summarized in the table below.

Contractor shall complete the following table:

Work Task/Phase/Deliverable	Hours	Hourly Billing Rate (from Standing Offer Agt)	Fee	Disbursements	Sub-total
			$	$	$
			$	$	$
Maximum Fees and Disbursements			$	$	$
GST			$	$	$
Maximum Fees and Disbursements (Sub-total plus GST)			$	$	$

3. **Contractor's Offer**

Subject to the terms and conditions of the Agreement and any additional terms and conditions set out in this Terms Agreement, the Contractor hereby offers to perform the Services described above, upon the terms and conditions described above, and for the fees specified above.

Signature on behalf of the Contractor:

_____ Date: _____

4. **City's Acceptance**

Subject to the terms and conditions of the Agreement, including any additional terms and conditions set out in this Terms Agreement, the Contractor is hereby directed to promptly proceed with the Services described above, upon the terms and conditions described above, and for the fees described above.

Signature of the City's Project Manager:

_____ Date: _____

APPENDIX C – APPLICATION

APPENDIX D – RFA