# INVITATION TO TENDER "ITT" NO. PS20170908
## CONSTRUCTION SERVICES FOR INTERIOR OFFICE RENOVATIONS AT 236 E CORDOVA STREET

## QUESTIONS AND ANSWERS NO. 2

**ISSUED ON 2017-10-05**

| | |
|---|---|
| **Q1** | Is contractor responsible for the removal of data cables and mechanical connections protruding from top of alleyway walkway which is outside of the contract area? |
| **A1** | **This is outside the scope of work.** |
| **Q2** | We did not find any architectural specifications for the project. When will specifications be posted? |
| **A2** | **Specifications are all on the drawings. There is no technical specification manual.** |
| **Q3** | Will owner be taking care of removing existing furniture from site? Please confirm. |
| **A3** | **Yes, the Owner will remove existing furniture prior to demo.** |
| **Q4** | Who is the base building structural engineer? Do we need to pay them for seismic bracing work or is it under contract with owner? Please confirm. |
| **A4** | **No base building structural engineer; not under Owner contract but GC's.** |
| **Q5** | What is the profile/model number for graphic type 1 and 2? |
| **A5** | **Cost allowance as per ITT Schedule A, table 2.** |
| **Q6** | Where are disposal bins permitted to be placed during construction? Do we need to pay for the bin location use? |
| **A6** | **Refer to Questions & Answers No. 1.** |
| **Q7** | Please provide section detail of the Lunch Room Eating Bar. According to 3/ID6.1 there is supposed to be SEC detail 1D/ID7.1, however this detail is mislabeled and not actually on the drawings. Also, is there a specification for the metal leg for this eating bar? |
| **A7** | **Refer to SK-3 Attached.** |
| **Q8** | ID 2.1 has several walls unlabeled wall types. Can you please clarify what each wall assembly is? |
| **A8** | **Wall Type 1 is to be constructed throughout unless noted otherwise. Refer the wall legend.** |

| | |
|---|---|
| **Q9** | Door type B calls for 12mm Tempered glass. Glazing notes on ID0.3 states glass panels in wood frames up to 9' only require 10mm tempered glass. Please verify which mm tempered glass is to be used? |
| **A9** | **Type B door is to have 10 mm tempered glass insert.** |
| **Q10** | Are existing GWB ceilings and bulkheads to receive level 5 finish or level 4? Please confirm. |
| **A10** | **Existing bulkheads are to be filled, sanded and repainted. Finish to match existing. New bulkheads to have level 5 finish.** |
| **Q11** | Can a list of site visit attendees be posted? |
| **A11** | **Refer to Questions and Answers 1 for the list.** |
| **Q12** | B2 is called for at P2 wall locations however, on drawing ID3.1 neither B2 nor P2 are shown? Are they required anywhere? |
| **A12** | **B2 and P2 are on North wall of Meeting room 428. See SK-2 attached.** |
| **Q13** | Separate Price #3: Room 409, drawing ID0.3 does not call for any new flooring however drawing ID3.1 calls resilient? Please confirm floor finish required. Is the floor finish in Room 409 to be included in the base estimate and rest of it in separate price? |
| **A13** | **Floor finish is to be included in the base price. ID3.1 show R1 in the floor tag. Specifications are in Finish Legend.** |
| **Q14** | Elevation 2 on drawing ID6.1 (2/ID2.1) needs clarification as to the layout of T4a / T4b & T4c at the backsplash. |
| **A14** | **Refer to sketch SK-1 attached** |
| **Q15** | Elevation 10 on drawing ID 6.2 calls out for ¾" square hollow metal tubing. Please provide detail as to how it is fastened to the wood (assuming it is). Also provide the wall thickness and the finish requirement? |
| **A15** | **Tubing is to be fastened to wood members from below. Wall thickness as noted on Wall Type legend – See Q8 above.** |
| **Q16** | Re: ID3.1, GR1. In room 409, it shows that the door receives GR1, wallcovering. Please confirm. |
| **A16** | **Vinyl film similar to VF1 suitable for attaching to painted door is to 409 as signage on door.** |
| **Q17** | Re: ID2.1, EQ11 Ceiling Mount TV. Please provide make & model of the TV Arm required for Office 435 |
| **A17** | **Include a price to support the television specified below. The specification must be a ceiling mounted post with a swivel arm.**<br>**The television to be mounted is:**<br>**Sony Bravia 40" (measured on the diagonal)**<br>**Model: KDL-40EX600**<br>**S/N: 190671.** |

| | |
|---|---|
| **Q18** | Drawing M3.02 shows the line set(s) for CU1 and CU2 coming thru holes in the mechanical room South wall. During the walk thru it was noted that the sidewall penetration between offices 434 and 435 is available for us as a chase for the linesets. IS THIS CORRECT. |
| **A18** | **We cannot approve this request without first reviewing it in more detail on-site and for the contractor to provide more detail of their intent. The IFT drawings intent was to have new envelope penetrations between Mech 402 and the roof space, which matches the existing condensing unit installation. Please quote as tendered.** |
| **Q19** | Is there a designated roofing company for CU1 and CU2 sleepers? |
| **A19** | **Cambie Roofing and Marine Roofing are the preferred trades however neither one has security clearance (which would be needed). Other trades can provide bids too.** |
| **Q20** | Re: Electrical Specifications. It has been mentioned on the drawing notes E3.0 that we are to provide a separate adder price for the power feeds to AC-1 & AC-2. Neither the electrical drawings or the mechanical drawings provide any electrical specs on this equipment. Please provide. |
| **A20** | **This is a one point connection unit which the power connection required is for the CU-1, CU-2 (Condensing Units) only. We've allowed for the power and controls conduit wiring to the indoor unit which is done by electrical as well, but this might already be covered by div 15.** |
| **Q21** | Re: Scope of Work for Communications. Will the specified communications contractor be completing the <u>entire scope</u> including rough-in, cabling, terminations, patch panels (& brackets) & testing? |
| **A21** | **The electrical contractor will be responsible for conduit rough in, the communication contractor is responsible for the data cable. Terminations to the patch panels, and supply and patch panels with the brackets and testing is all done by the communications contractor.** |

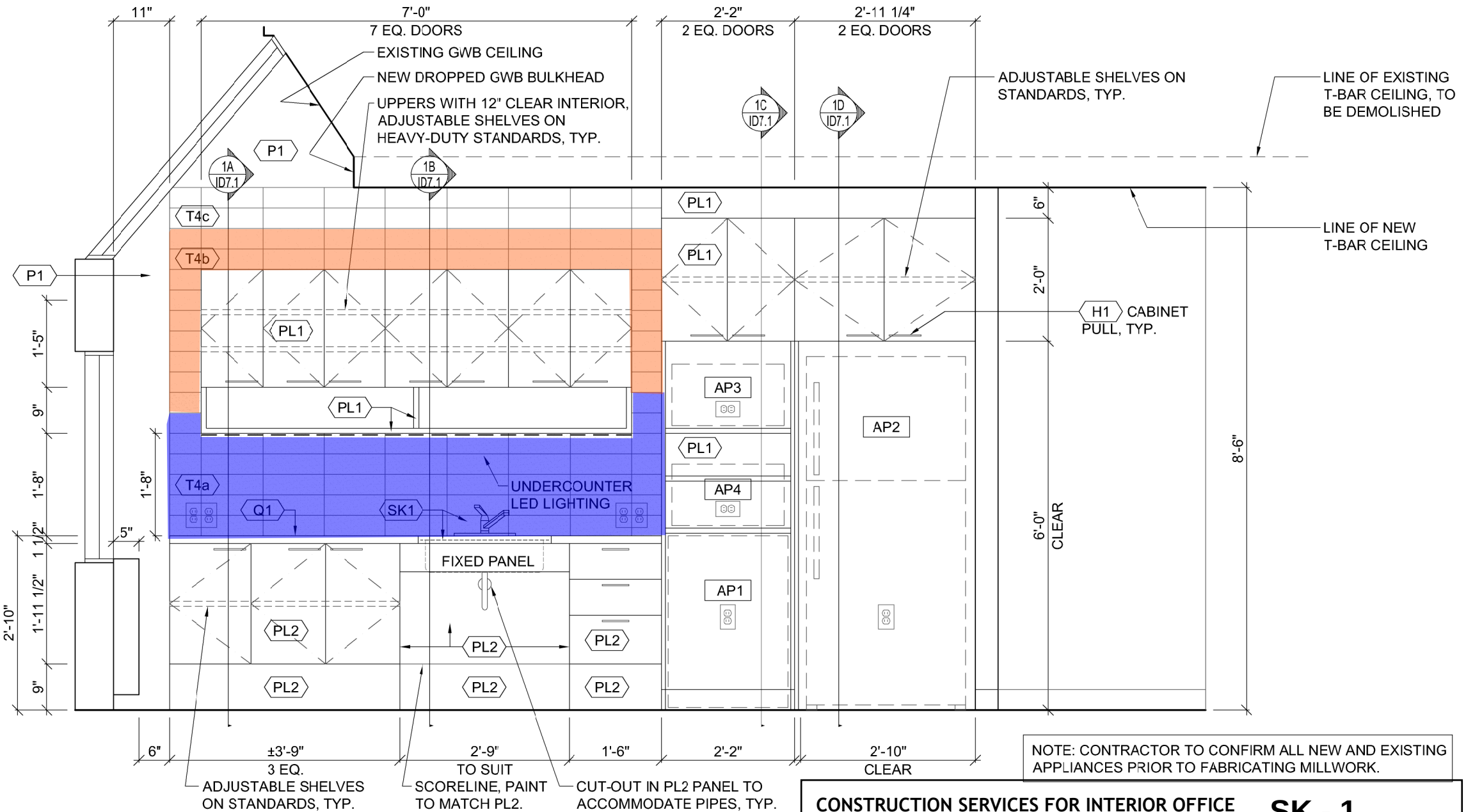


NOTE: CONTRACTOR TO CONFIRM ALL NEW AND EXISTING APPLIANCES PRIOR TO FABRICATING MILLWORK.

2 / ID2.1 ELEVATION: LUNCH ROOM 408 EAST

SCALE 1/2"=1'-0"

**CONSTRUCTION SERVICES FOR INTERIOR OFFICE RENOVATIONS AT 236 E CORDOVA STREET QUESTIONS AND ANSWERS NO.2**

**SK - 1**

**OCT 3, 2017**

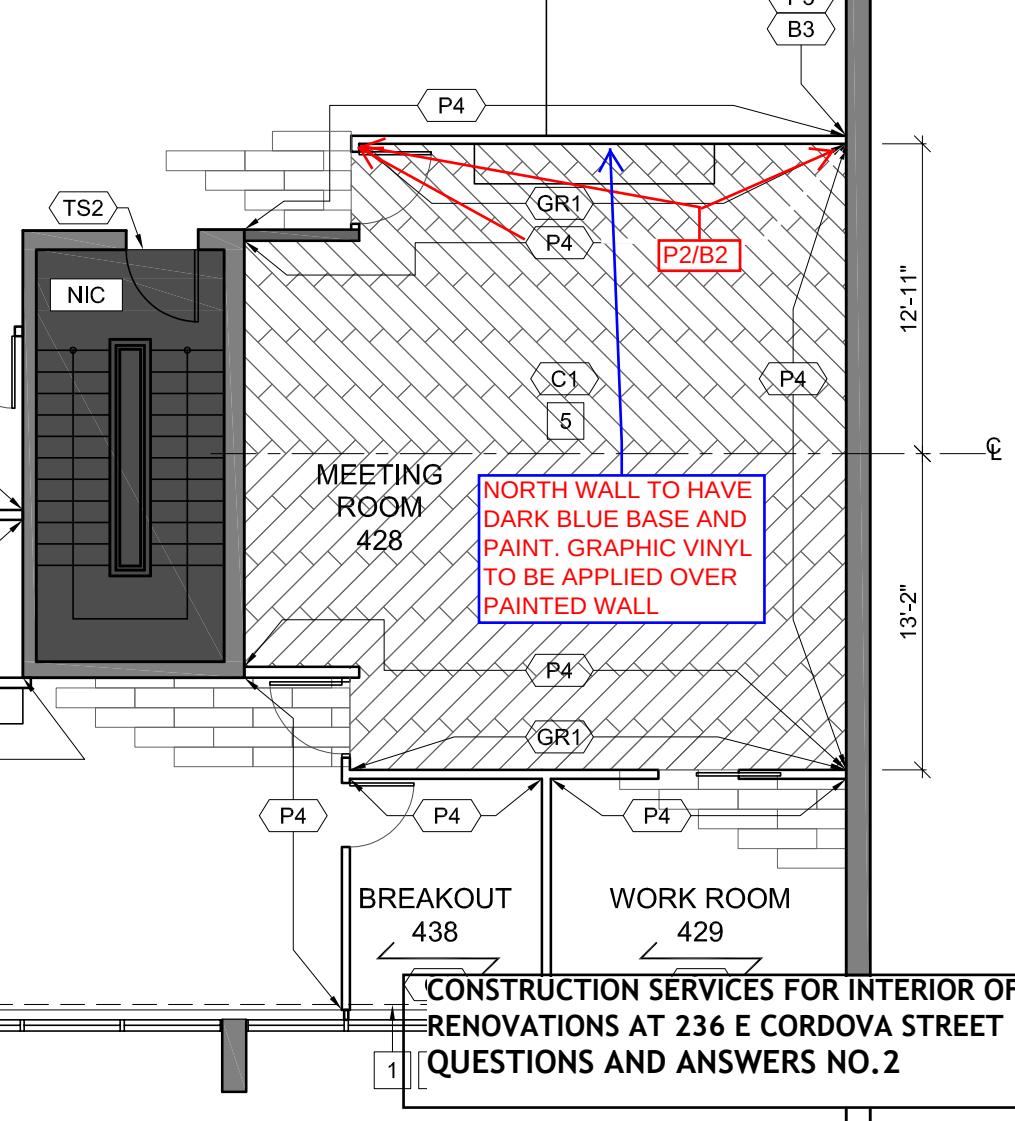


**CONSTRUCTION SERVICES FOR INTERIOR OFFICE RENOVATIONS AT 236 E CORDOVA STREET**
**QUESTIONS AND ANSWERS NO.2**

**SK - 2**
**OCT 3, 2017**

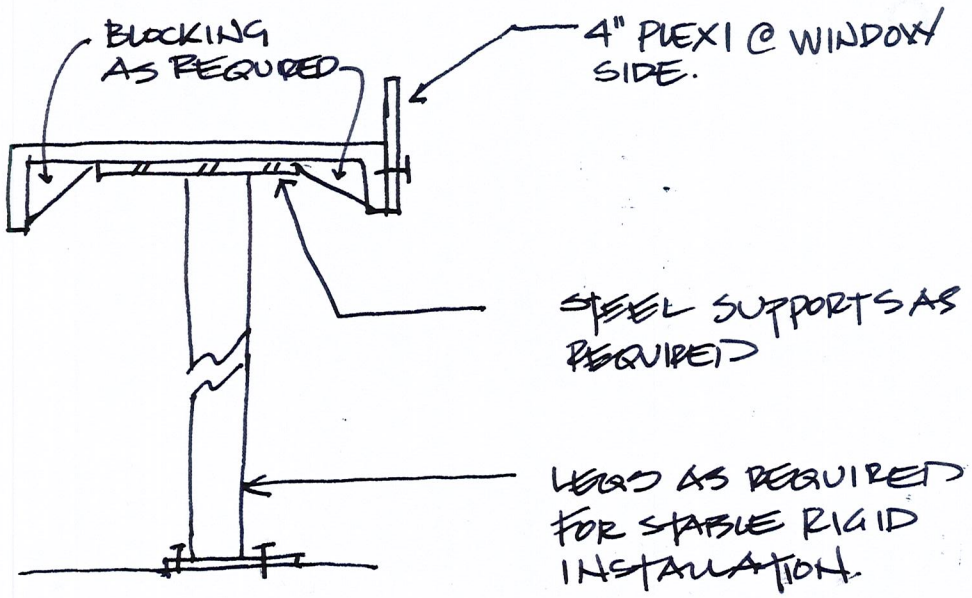


| | |
|---|---|
| CONSTRUCTION SERVICES FOR INTERIOR OFFICE RENOVATIONS AT 236 E CORDOVA STREET<br>QUESTIONS AND ANSWERS NO.2 | **SK - 3**<br>**OCT 3, 2017** |